Adopted by City Council on: October 16, 2012

Milpitas Transit Area Specific Plan

Streetscape Elements

Design Standards Reference Book For Creating Active and Inviting Public Places, Paths, and Corridors

STREETSCAPE ELEMENTS

Purpose

The purpose of this document is to provide a set of approved streetscape elements that are consistent with the vision and goals of the Transit Area Specific Plan to streamline the permitting process. Builders will choose elements from this document and incorporate those on construction documents. City staff will ultimately review and recommend elements that fit the context of the project.

Deviations and Amendments

Minor deviations from the approved elements may occur, however, if city staff deems the deviations significant, then the City Council shall approve such changes. From time to time, the City Council may amend this document.

STREETSCAPE ELEMENTS

Street Light: Capella Series by Philips Lumec

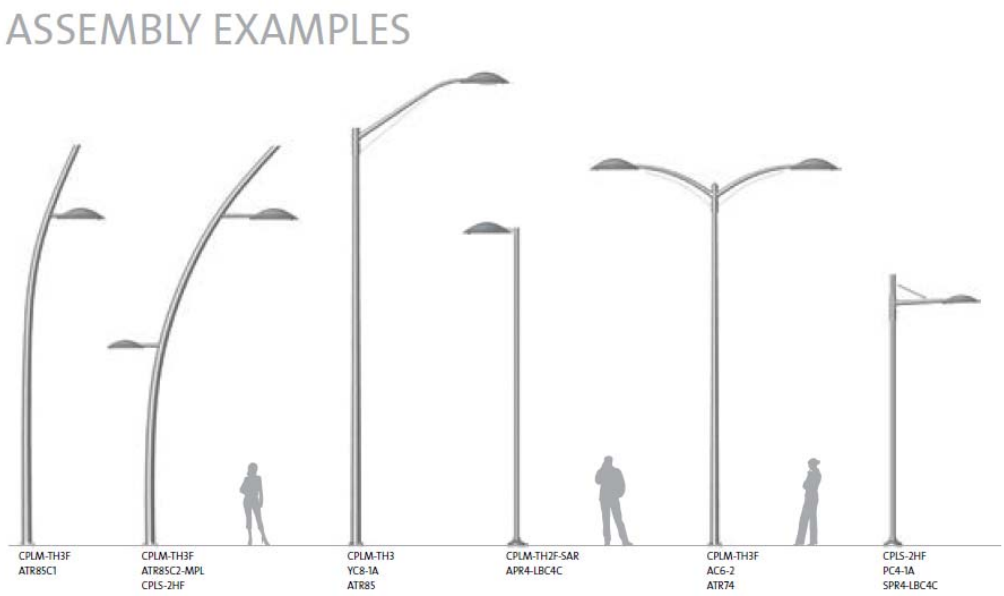

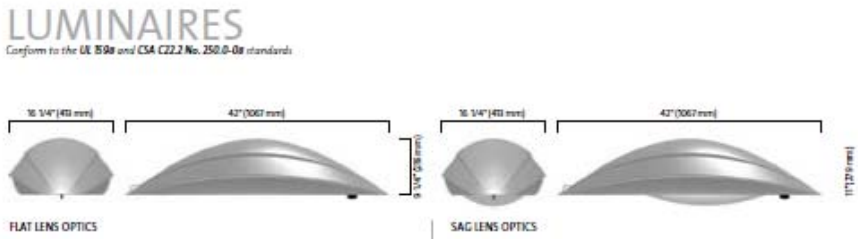

STREETSCAPE ELEMENTS

Street Light: Roadstar Series by Philips Lumec

Physical characteristics

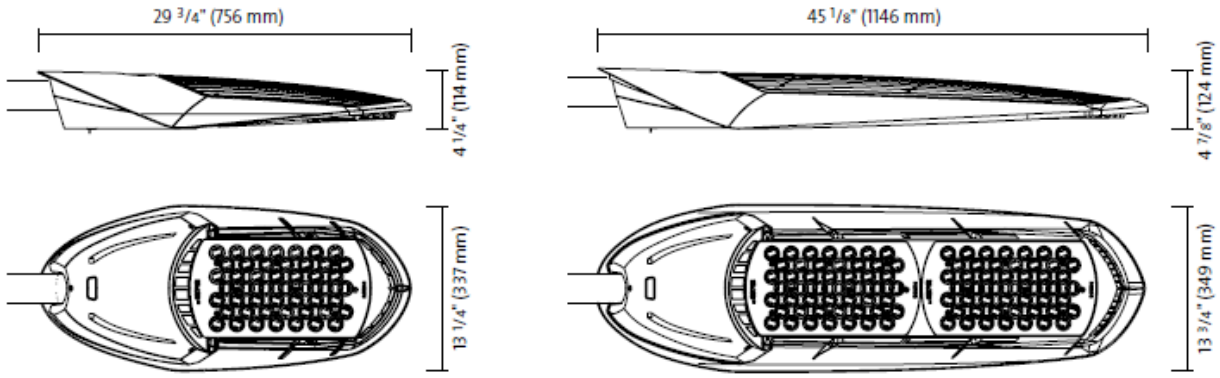

GPLS
EPA: 0.76 sq. ft.
Weight: 20 lbs (9.1 kg)

GPLM
EPA: 1.10 sq. ft.
Weight: 31 lbs (14.1 kg)

STREETSCAPE ELEMENTS

Litter and Recycling Container: TimberForm Renaissance by Columbia Cascade

TimberForm Renaissance	Style	Model	Diameter	Height	Mounting Options
Litter Container, Side Empty	Open Top	2815-OT[1]	1' 9" [535mm]	2' 10" [865mm]	-E, -P or -L
	Flat Top	2815-FT	1' 9" [535mm]	2' 10" [865mm]	-E, -P or -L
	Dome Top	2815-DT	1' 9" [535mm]	3' 5" [1040mm]	-E, -P or -L
	Ash/Dome Top	2815-AT	1' 9" [535mm]	3' 4" [1015mm]	-E, -P or -L

Material: Powder-coated steel.
Options: Mounting method and powder-coating color.
Notes: Includes 23-gallon plastic liner. Top matches container unless otherwise specified.
Key-locking tops and side opening door are standard on **-FT**, **-DT** and **-AT** models.
[1] Key-locking top and side opening door not required on Open Top (**-OT**) model.

2815-OT

2815-FT

2815-DT

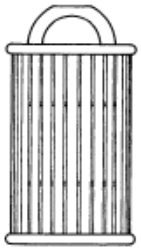
2815-AT

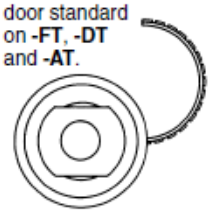

"Standard Capacity"

STREETSCAPE ELEMENTS

Bench Seats (Option A): TimberForm Manor by Columbia Cascade

TimberForm Manor	Model	Length	Width	Height	Seat Height	Mounting Options
Arched Back Bench with Armrests	**2824-4**	4' 2" [1270mm]	1' 11" [585mm]	2' 11" [890mm]	1' 4" [405mm]	**-E**, **-P** or **-L**
	2824-6	6' 2" [1880mm]	1' 11" [585mm]	2' 11" [890mm]	1' 4" [405mm]	**-E**, **-P** or **-L**
	2824-8'	8' 2" [2490mm]	1' 11" [585mm]	2' 11" [890mm]	1' 4" [405mm]	**-E**, **-P** or **-L**
	-MP Add this suffix for mounting-plate option (plaque by customer).					

Material: Powder-coated steel.
Options: Mounting method, powder-coating color and mounting plate.
Suggestions: Specify matching accessory table **2820**, litter container **2831** or **2834** and ash receptacle **2835**. Matching planters are available.
Notes: ' Includes intermediate support.

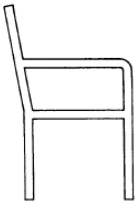

2824

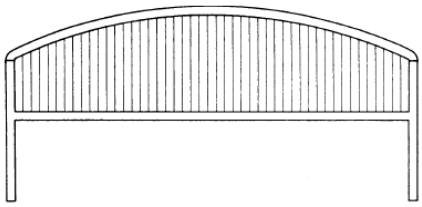

2824-6

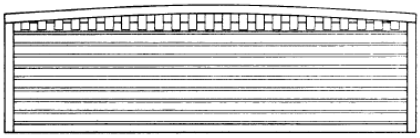

STREETSCAPE ELEMENTS

Bench Seats (Option B): TimberForm Manor by Columbia Cascade

TimberForm Manor	Model	Length	Width	Height	Seat Height	Mounting Options
Curved Bench with Armrests	**2829-8'**	10' 3" [3125mm]	1' 11" [585mm]	2' 11" [890mm]	1' 4" [405mm]	**-E, -P** or **-L**

Material: Powder-coated steel.
Options: Mounting method and powder-coating color. Center armrest available.
Suggestions: Specify matching accessory table **2820**, litter container **2831** or **2834** and ash receptacle **2835.** Matching planters are available.
Notes: ' Includes intermediate support.

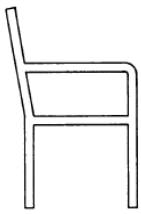

2829

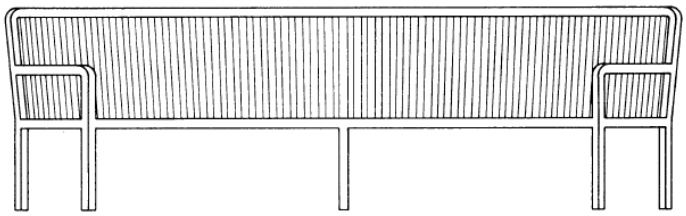

2829-8

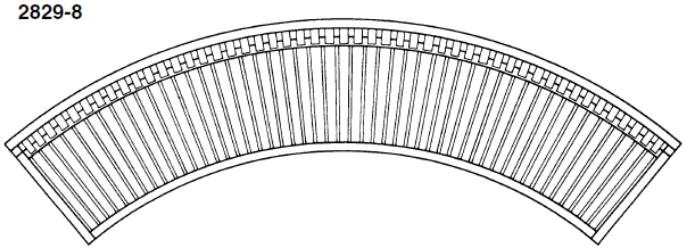

Bench Radius Data
The standard inside radius to the front of the **2829-8** bench is 5' 9" [1755mm] and the standard outside radius to the back of the bench is 7' 8" [2335mm].

STREETSCAPE ELEMENTS

Bicycle Rack (Option A): Bike Bike Rack by Dero

BIKE BIKE RACK

Specifications and Space Use

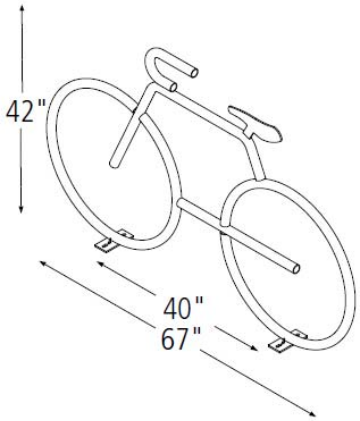

Capacity

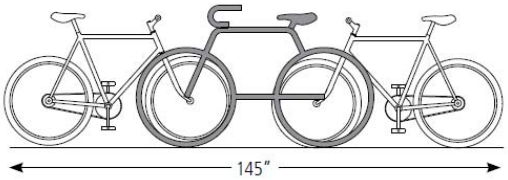

Product
Dero Bike Bike Rack
As manufactured by Dero Bike Racks

Capacity
2-4 Bikes

Materials
1.5" OD 11 Gauge Tube. All open ends are capped to prevent moisture from entering. All welds are MIG welds around entire circumference of joined pieces.

Finishes
An after fabrication hot dipped galvanized finish is our standard option. 250 TGIC powder coat colors, thermoplastic coating, and stainless steel finishes are also available as alternate options.

Our powder coat finish assures a high level of adhesion and durability by following these steps:
1. Sandblast
2. Epoxy primer electrostatically applied
3. Final thick TGIC polyester powder coat

Stainless Steel: 304 grade stainless steel material finished in either a high polished shine or a satin finish.

Bicycle Rack (Option B): Helix Bike Rack by Dero

HELIX RACK

Specifications and Space Use

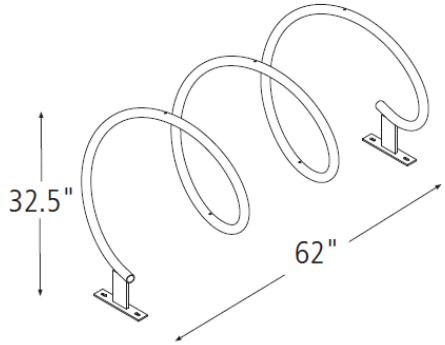

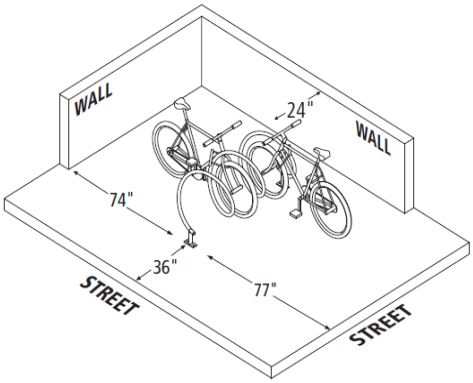

Product
Dero Helix Rack
As manufactured by Dero Bike Racks

Capacity
6 Bikes

Materials
1.25" Pipe (1.66" OD)

Finishes
A hot dipped galvanized finish after fabrication is standard. Powder coat, thermoplastic, and stainless steel options are also available.

Installation Methods

Recommended Install Base Materials
Solid concrete is the best base material for installation. Ask your Dero Rack representative which anchor is appropriate for your application to ensure the proper anchors are shipped with your rack. Be sure nothing is underneath the base material that could be damaged by drilling.

Installation
3/8" anchors are shipped with the rack. Place the rack in the desired location. Use a marker or pencil to outline the holes of the flange onto the base material. Drill the holes in accordance with the specifications shipped with the anchors. Make sure the holes are at least 3" away from any cracks in the base material. Tap in anchors and follow directions for the specific anchor shipped with the rack.

STREETSCAPE ELEMENTS
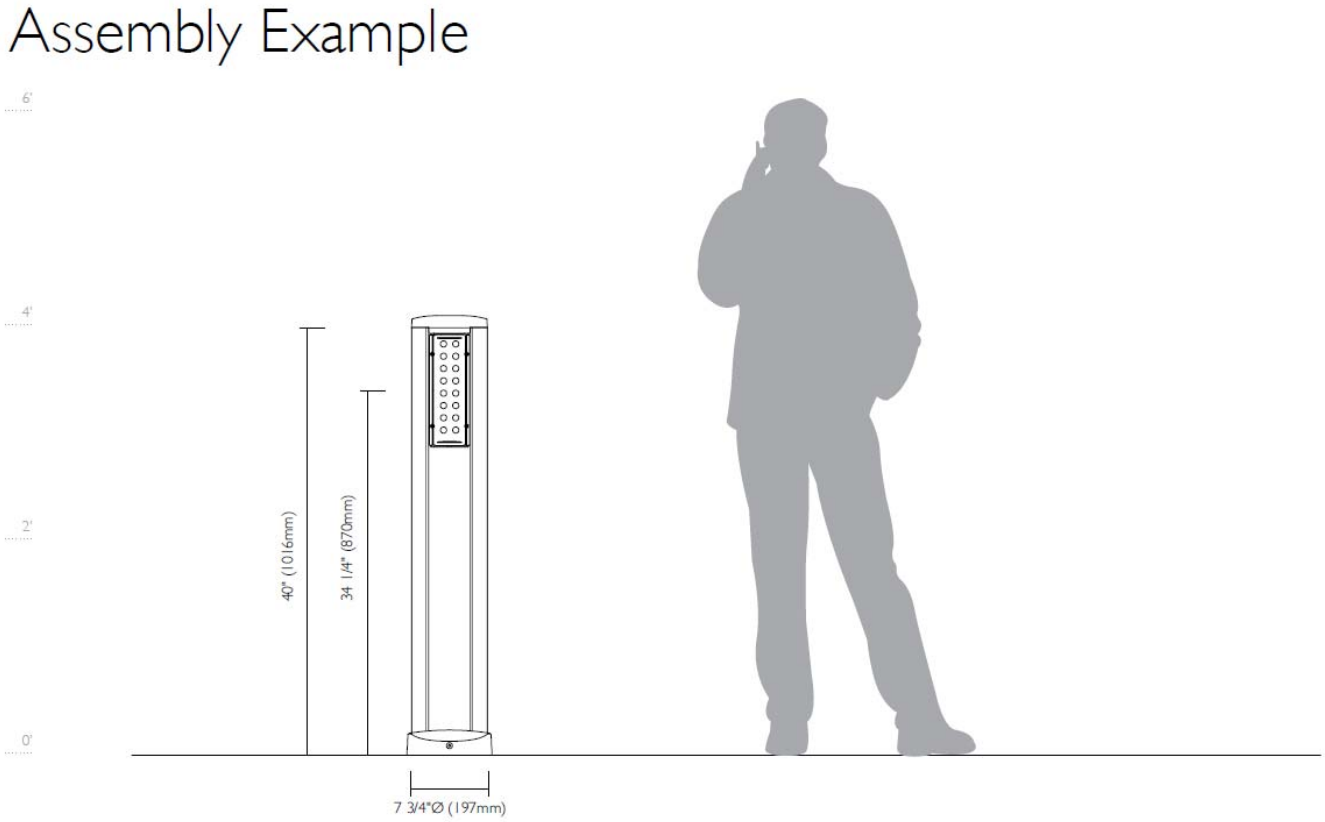
Light Bollard: SoleCity by Philips Lumec