TRAFFIC IMPACT STUDY

1494 – 1600 CALIFORNIA CIRCLE

MILPITAS - CALIFORNIA

Prepared for

THE CITY OF MILPITAS

Submitted to

EVERLASTING PRIVATE FOUNDATION

Prepared by

MULTITRANS
Transportation Consultants, Inc.

2410 Camino Ramon, Suite 166
San Ramon, California 94583
(925) 355-7300
Fax (925) 355-7303
E-mail: davidy@multitransusa.com

January 24, 2007

ATTACHMENT F

TRAFFIC IMPACT STUDY

*****

1494 - 1600 CALIFORNIA CIRCLE

MILPITAS - CALIFORNIA

*****

CONTENTS

Page

Executive Summary ..... ES - 1

1 Introduction 1

2 Existing Conditions 8

3 Background Conditions 15

4 Evaluation of Project Conditions 18

5 Conclusions and Recommendations 24

APPENDICES

A. Existing Traffic Data
B. Intersection Level of Service Analyses
C. Proposed Daily Project Operations Plan

LIST OF TABLES

ES-1 Intersection Levels of Service ES-3
2-1 Level of Service Definitions - Signalized Intersections 11
2-2 Existing Intersection Levels of Service 14
3-1 Background Intersection Levels of Service 17
4-1 Anticipated Trip Generation Characteristics of The Project 19
4-2 Project Condition Intersections Levels of Service 23
4-3 Anticipated Parking Accumulation - Sunday 24
4-4 Anticipated Parking Accumulation - Weekday 25

LIST OF FIGURES

1-1 Area Location Map 3
2-1 Existing Traffic Conditions - PM Peak Hour 12
3-1 Anticipated Background Conditions - PM Peak Hour 16
4-1 Project Trip Distribution 21
4-2 Anticipated Project Conditions - PM Peak Hour 22

Executive Summary

This report summarizes the results of analysis and findings of a traffic impact study that was undertaken by MULTITRANS Transportation Consultants, Inc., in connection with the Use Permit Application for the two existing buildings located at 1494 and 1600 California Circle, in the City of Milpitas, California.

The proposed project consists of the amendment and expansion of the existing Use Permits for the existing two buildings at 1494 and 1600 California Circle, in the City of Milpitas, California. Everlasting Private Foundation (EPF), a non-profit organization, is the owner of 1494 and 1600 California Circle in Milpitas. EPF is leasing the existing 66,000 Square Foot building located at 1494 California Circle to the Living Word Christian Center (LWCC), aka Living Word Baptist Church and Korean Baptist Church, also a non-profit organization.

The project site, as illustrated in Figure 1-1, is located in the City of Milpitas, on California Circle, near the I-880/Dixon Landing Interchange. Direct access to the project site is provided from California Circle. Access to the project site, for the vehicles traveling from north on I-880, is provided via I-880 southbound off ramp at Dixon Landing Road, to Dixon Landing Road, and California Circle. Access to the project site, for the vehicles traveling from south on I-880, is provided via I-880 northbound off ramp at California Circle, and California Circle. Access to the project site, for vehicles traveling from Milpitas Boulevard is provided via Dixon Landing Road, and California Circle.

The existing Sanctuary generates a membership assembly of approximately 550 members during a single service on a typical Sunday. The total number of parking spaces provided at the existing site is 228 parking spaces. The proposed project will allow the church to increase the number of Sunday services to a total of two assemblies. First service will be held about 9:00 a.m. on Sundays, and a second service will be held during the Sunday afternoon. However, with the addition of the new building the number of parking spaces will also be increased by 150 spaces to a total of 378 parking spaces.

The proposed supply of additional 150 parking spaces will insure adequate parking supply, in case some members from the first service may remain at the church during the second service.

Existing traffic volumes and traffic flow patterns for the peak hours of roadway operations was developed through traffic counts and field observations conducted by MULTITRANS. Roadway and traffic data, and turning movement counts were compiled for the following five analysis intersections in the vicinity of the project site. Figure 2-1 graphically depicts the location of the following five study intersections:

- Dixon Landing Rd./California Circle
- Dixon Landing Rd./I-880 SB Ramp
- Dixon Landing Rd./Milmont Dr.
- Dixon Landing Rd./N. Milpitas Blvd.
- California Circle/I-880 NB On and Off Ramps

The adequacy of the existing roadway and site access system was evaluated to determine the need for access and roadway improvements. Volume-to-capacity relationships at the analysis intersections were determined, and the resultant levels of service of the analysis intersections were evaluated using the Highway Capacity Manual methodology. Anticipated background conditions served as a base from which impacts were evaluated. The level of service analyses indicate that following the implementation of the project all the study intersections will be operating at acceptable levels of service of D or better. The result of the level of service analyses is presented in Table ES-1.

The existing Sanctuary generates a membership assembly of approximately 550 members during a single service on a typical Sunday. The total number of parking spaces provided at the existing site is 228 parking spaces. The proposed project will allow the church to increase the number of Sunday services to a total of two assemblies. First service will be held at about 9:00 AM on Sundays, and a second service will be held during the Sunday afternoon. However, with the addition of the new building the number of parking spaces will also be increased by 150 spaces, to a total of 378 parking spaces.

A total of 378 parking spaces will be provided at the project site. MULTITRANS staff have reviewed the proposed church programs and schedule of classes and other activities proposed for the project. As presented in Table 4-3, the highest parking accumulation on a typical Sunday will occur at about 12:30 PM. Based on the City of Milpitas parking requirement guidelines, approximately 191 parking spaces should be provided.

Additionally, as presented in Table 4-4, the highest levels of parking accumulation on a typical weekday will occur at about 2:30 PM. Based on the City of Milpitas parking requirement guidelines, approximately 370 parking spaces should be provided. Therefore, the parking supply of 378 will be sufficient for anticipated maximum parking demand of 370 parking spaces. However, because the proposed parking supply of 378 spaces is almost equal to the anticipated parking requirements of 370 spaces, the schedule of classes should be developed in a manner so that over lapping of parking demand will not occur during the peak periods of parking demand.

Table ES-1
Intersection Levels of Service
1494 – 1600 California Circle Project

Intersection	Existing		Background		Project	
	PM	Sunday	PM	Sunday	PM	Sunday
Dixon Landing Rd./California Circle	C	-	C	-	C	-
Dixon Landing Rd./I-880 SB Ramp	A	-	A	-	A	-
Dixon Landing Rd./Milmont Dr.	D	-	D	-	D	-
Dixon Landing Rd./N. Milpitas Blvd.	D	-	D	-	D	-
California Circle/I-880 NB On and Off Ramps	B	A	B	A	B	B

Notes:

LOS = Level of service

Conclusions and Recommendations

Field reconnaissance, traffic counting programs, data collection, and traffic engineering analyses assisted in developing an accurate picture of existing and projected future roadway conditions and traffic operations in the site environs. The anticipated traffic volumes generated by the proposed project were forecasted and evaluated based upon accepted travel characteristics and guidelines developed by the Institute of Transportation Engineers, and the City of Milpitas. The anticipated net weekday PM peak hour and Sunday peak period project trips, plus projected background traffic were assigned to the roadway system and combined traffic volumes were analyzed to determine roadway adequacy and access requirements.

The analysis of site access and traffic circulation in the area indicates that a satisfactory access plan can be developed and applied to accommodate the existing and anticipated traffic volumes. Implementation of the suggested recommendations in this report will provide efficient and acceptable traffic operations for the site and other traffic on the adjacent roadway system.

This study concludes that when the proposed project is constructed and made operational, and when the proposed mitigation measures are implemented, the public roadway system serving the site, without a significant adverse impact, can accommodate the anticipated traffic volumes that would be generated by the proposed project.

The proposed site access system was analyzed for adequacy with respect to the anticipated traffic volumes and adjacent roadway system. In considering site access, the primary goal was to identify possible deficiencies in the proposed site access system that would hinder efficient traffic operations for both anticipated site traffic and projected adjacent roadway traffic. Anticipated site ingress and egress movements were studied for safety and efficiency. To properly serve traffic generated by the proposed project, and to provide maximum safety and operating measures, the following mitigation measures and site access guidelines are recommended:

- To prevent generation of new project trips during the weekday AM and PM peak hours, all Seminary classes and other events should be held during the hours of 9:30 AM to 3:30 PM and after 6:30 PM;

- The church should develop a carpool/vanpool program and the members should be encouraged to use the vanpool services or carpool;

- All County of Santa Clara, City of Milpitas, and Caltrans traffic engineering and design standards should be met.

Chapter 1

Introduction

This report summarizes the results of analysis and findings of a traffic impact study that was undertaken by MULTITRANS Transportation Consultants, Inc., in connection with the Use Permit Application for the two existing buildings located at 1494 and 1600 California Circle, in the City of Milpitas, California.

Project Description and Location

The proposed project consists of the amendment and expansion of the existing Use Permits for the existing two buildings at 1494 and 1600 California Circle, in the City of Milpitas, California. Everlasting Private Foundation (EPF), a non-profit organization, is the owner of 1494 and 1600 California Circle in Milpitas. EPF is leasing the existing 66,000 Square Foot building located at 1494 California Circle to the Living Word Christian Center (LWCC), aka Living Word Baptist Church and Korean Baptist Church, also a non-profit organization.

Everlasting Private Foundation would like to amend the existing Use Permit, issued by the City of Milpitas for the property, so that the approved Sanctuary may be moved from the building located at 1494 California Circle to the adjacent 44,000 Square Foot building at 1600 California Circle, where a walkway and driveways have been planned to link the two buildings together. A Seminary will occupy the existing building located at 1494 California Circle.

The existing Sanctuary generates a membership assembly of approximately 550 members during a single service on a typical Sunday. The total number of parking spaces provided at the existing site is 228 parking spaces. The proposed project will allow the church to increase the number of Sunday services to a total of two assemblies. First service will be held about 9:00 a.m. on Sundays, and a second service will be held during the Sunday afternoon. However, with the addition of the new building the number of parking spaces will also be increased by 150 spaces to a total of 378 parking spaces.

The proposed supply of additional 150 parking spaces will insure adequate parking supply, in case some members from the first service may remain at the church during the second service.

Over the last several months, EPF investigated the cost and logistics to construct the new sanctuary, but it was determined that the cost for the two-hour area separation walls together with the structural impact, required significant improvements making this cost prohibitive. Therefore, the only viable alternative was to relocate the sanctuary and expand it into the adjacent building at 1600 California Circle, which would eliminate the requirement for the two-hour area separation walls in the original building. Of course, the adjacent building would need improvements, but it would be much more nominal, since it was built much later and the area is unimproved. Therefore, it would not disrupt the activities of the existing LWCC. Some of the current classrooms will remain in 1494 with additional ones in 1600.

In addition, EPF is working with different seminaries to utilize the rest of the space at the 1494 California Circle building. A seminary has yet to be engaged, but the proposed schedule of operations evaluated as part of this traffic study reflects the typical seminary offerings. The project site is illustrated in Figure 1-1.

Site Access Plan

Direct access to the project site is provided from California Circle. Access to the project site, for the vehicles traveling from north on I-880, is provided via I-880 southbound off ramp at Dixon Landing Road, to Dixon Landing Road, and California Circle.

Access to the project site, for the vehicles traveling from south on I-880, is provided via I-880 northbound off ramp at California Circle, and California Circle. Access to the project site, for vehicles traveling from Milpitas Boulevard is provided via Dixon Landing Road, and California Circle.

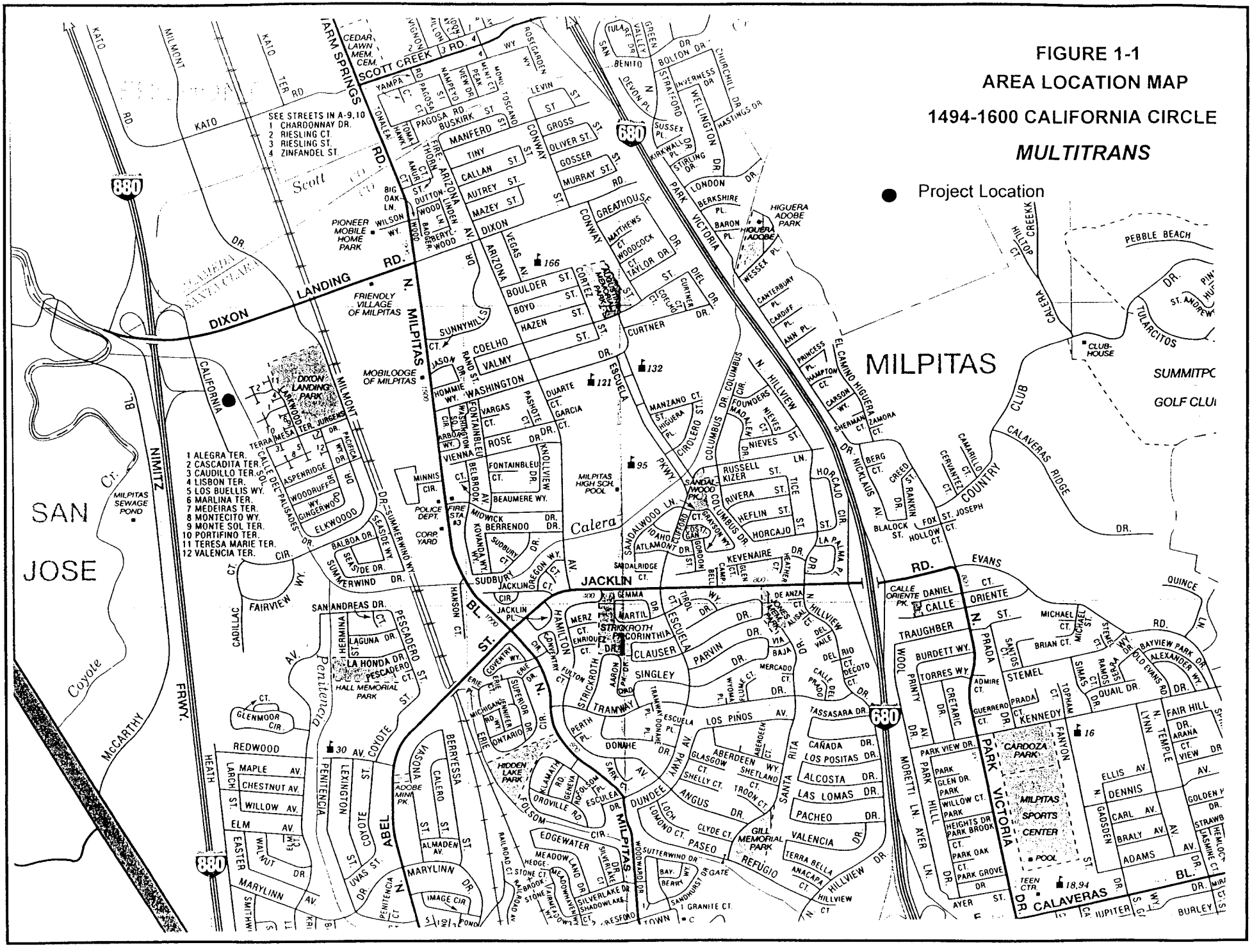
FIGURE 1-1
AREA LOCATION MAP
1494-1600 CALIFORNIA CIRCLE
MULTITRANS
Project Location
MILPITAS
SAN JOSE
SEE STREETS IN A-9,10
1 CHARDONNAY DR.
2 RIESLING CT.
3 RIESLING ST.
4 ZINFANDEL ST.
1 ALEGRA TER.
2 CASCADITA TER.
3 CAUDILLO TER.
4 LISBON TER.
5 LOS BUELLIS WY.
6 MARLINA TER.
7 MEDEIRAS TER.
8 MONTECITO WY.
9 MONTE SOL TER.
10 PORTIFINO TER.
11 TERESA MARIE TER.
12 VALENCIA TER.
SCOTT CREEK RD.
DIXON LANDING RD.
N. MILPITAS BL.
JACKLIN ST.
EVANS RD.
CALAVERAS BL.
NIMITZ FRWY.
McCARTHY BL.
680
880
CEDAR LAWN MEM. CEM.
PIONEER MOBILE HOME PARK
FRIENDLY VILLAGE OF MILPITAS
MOBILODGE OF MILPITAS
DIXON LANDING PARK
MILPITAS SEWAGE POND
POLICE DEPT.
FIRE STA. #3
CORP. YARD
MILPITAS HIGH SCH. POOL
HIGUERA ADOBE PARK
CLUB-HOUSE
PEBBLE BEACH
SUMMITPC
GOLF CLUI
HALL MEMORIAL PARK
HIDDEN LAKE PARK
ADOBE MINI PK.
GILL MEMORIAL PARK
CARDOZA PARK
MILPITAS SPORTS CENTER
POOL
TEEN CTR.
Calera
Coyote
Penitencia
Scott
166
132
121
95
30
16
18,94

Study Purpose and Scope of Work

The purpose of this traffic impact study is to document the traffic impacts of the proposed project on the adjacent roadway system, to ensure efficient traffic operations subsequent to the completion of the project, and to provide appropriate site access design and operation guidelines to be incorporated into the development plan.

MULTITRANS was retained to conduct a traffic study to evaluate the impact of the proposed project on the adjacent roadway system, and to address traffic circulation issues in the vicinity of the project site. Consulting responsibilities for the preparation of this transportation impact analysis include:

- Coordination of the study with the project team;
- Conducting traffic surveys and field reconnaissance;
- Determining traffic generation characteristics of the proposed project, and determining directional distribution of site oriented traffic;
- Obtaining data on other approved land development projects within the study area that could impact traffic operations;
- Assessing the existing and planned roadway system and land developments in the project area;
- Assessing the proposed parking plan for the project;
- Recommending an acceptable access plan to be incorporated in the final report, including recommendation of necessary traffic mitigation measures.

Study Approach

This Traffic Impact Study was conducted in accordance with the requirements and the Scope of Work provided by the City of Milpitas.

The following steps were followed in the conducting of this traffic impact study:

1. ***Field Reconnaissance*** - The physical characteristics of the site and the adjacent roadway system were reviewed to identify existing roadway cross-sections, intersection lane configurations, traffic control devices, and surrounding land uses.

2. ***Collection of Traffic Data*** - Existing weekday PM and Sunday peak hour traffic volumes and turning movement counts were collected by MULTITRANS staff for the study intersections.

3. ***Evaluation of Existing Conditions*** - The existing weekday PM and Sunday peak hour traffic operations of the analysis intersections in the vicinity of the project site were evaluated for all the study intersections located in the vicinity of the project site. The Level of Service of the study intersections was evaluated by utilizing the TRAFFIX software, which is based on guidelines recommended in HCM.

4. ***Evaluation of Background Conditions*** - The existing traffic turning movement counts collected by MULTITRANS were projected to a future date when the project is anticipated to be in full operations. Projected traffic volumes from approved developments were added to the existing peak hour traffic volumes to obtain traffic volumes for background traffic conditions. Level of Service analysis was conducted to evaluate the Level of Service of the analysis intersections under the anticipated background conditions.

5. ***Anticipated Project Trip Generation Characteristics*** - Anticipated number of project trips was projected based on the recommended guidelines provided by the Institute of Transportation Engineers and trip generation studies conducted at the existing project site, and based on the anticipated operations of the proposed project as incorporated in Tables -3 and 4-4, and the tables included in the Appendix C.

6. ***Anticipated Site Traffic Distribution*** - The directional distribution of project-generated trips was forecast based on the traffic characteristics exhibited in the study area and the anticipated operations of the proposed project.

7. ***Anticipated Site Traffic Assignment*** - Through the utilization of the directional distribution, in conjunction with the site generated traffic and adjacent street traffic, it was possible to develop the traffic flow that would be expected at the analysis intersections and roadways.

8. ***Projection and Evaluation of Project Conditions*** - anticipated peak hour project generated trips (less the existing trips generated by the existing project), plus projected background traffic volumes were assigned to the roadway system and analysis intersections. Combined traffic volumes were analyzed to determine roadway adequacy and access requirements.

   Level of service analyses were performed to evaluate operating conditions and level of service of the analysis intersections in the vicinity of the project site during the peak hours of the adjacent roadway system.

9. ***Analysis of Parking Supply and Demand*** – a comprehensive parking analysis was conducted to insure the provision of the required number of parking spaces for the proposed project, in accordance with the City of Milpitas parking requirement guidelines.

10. ***Description of Impacts and Recommendations*** - Based on the results of the level of service analyses, impacts of the project-generated traffic were identified and described. Recommendations were developed and evaluated, that identify the locations and types of improvements of modifications necessary to mitigate project impacts.

Definition of Technical Terms

In order to clarify the meaning of certain specialized traffic engineering terms that may be used in this report, the following definitions are offered:

- **Trip** is a one-way movement to or from a site. One car entering and leaving a site constitutes two trips.

- **Traffic Generation** is the actual number of vehicle movements that may reasonably be expected to be attracted and produced by a specific development. Usually, traffic generation is expressed as a number of trips.

- **Average Daily Traffic (ADT)** is the total traffic generation of a development on a typical working weekday.

- **Peak Hour Generation** is the maximum traffic generation that may be anticipated during the highest volume hour of the adjacent roadway system for the particular land use. This analysis parameter may vary as to the time of day, and to the type of facility proposed.

- **Trip Distribution** is the process of determining the proportions of the generated trips that can be expected to originate or terminate at any location.

- **Trip Assignment** is the process of assigning the trips that have been distributed from the various points of origin to the roadway system that would provide the most direct route between points of origin and destination.

- **Capacity and Level of Service (LOS)** are terms utilized to describe the ability of a roadway or intersection to accommodate its traffic assignment.

- **Reserve Capacity** is the difference between the maximum available volume and the demand volume.

- **Background Condition** is defined as the condition of traffic at the time of project implementation, without the trips from the proposed project.

- **Project Condition** is defined as the condition of traffic following the implementation of the proposed project.

- **Queuing Analyses** is defined as the study of the instantaneous number of vehicles in a standing or slowly moving queue.

Chapter 2

Existing Conditions

The project site, as illustrated in Figure 1-1, is located in the City of Milpitas, on California Circle, near the I-880/Dixon Landing Interchange. The existing church is presently generating a membership of approximately 550 people each Sunday. The existing number of parking spaces provided at the site is 250.

Description of the Existing Roadway System

Interstate 880 - Regional access to the site is provided by Interstate 880. I-880 is a north/south directional roadway, traversing from the City of Oakland to Santa Clara County, and south to Santa Cruz County as State Route 17. In the vicinity of the project site, it is a ten-lane freeway, providing an interchange at Dixon Landing Road. The Caltrans reported AADTs for I-880 near the project site are as high as 178,000 vehicles per day, and approximately 11,200 vehicles during the peak hour.

Dixon Landing Road - Access to the site is also provided via Dixon Landing Road, which is a four-lane roadway with curb, gutter and sidewalks. Dixon Landing Road traverses between Milpitas Boulevard and N. McCarthy Boulevard. The posted speed limit on Dixon Landing Road is 40 MPH, and the current PM peak hour trips on this roadway just to the east of California Circle is approximately 2,975 vehicles per hour.

California Circle - Direct access to the project site is provided by California Circle. California Circle is a four-lane roadway with curb, gutter and sidewalks. California Circle traverses between Dixon Landing and Milmont Drive. The posted speed limit on this roadway is 35 MPH. The current PM peak hour trips on this roadway, just to the south of Dixon landing, are approximately 2,000 vehicles per hour.

Existing Traffic Conditions

Existing traffic volumes and traffic flow patterns for the peak hours of roadway operations were developed through traffic counts and field observations conducted by MULTITRANS. Roadway and traffic data, and turning movement counts were compiled for the following five analysis intersections in the vicinity of the project site. Figure 2-1 graphically depicts the location of the following five study intersections:

- Dixon Landing Rd./California Circle
- Dixon Landing Rd./I-880 SB Ramp
- Dixon Landing Rd./Milmont Dr.
- Dixon Landing Rd./N. Milpitas Blvd.
- California Circle/I-880 NB On and Off Ramps

A traffic counting program was undertaken by MULTITRANS to obtain the existing PM peak hour traffic data at the above analysis intersections. Traffic was counted during the PM peak periods of adjacent roadway system, between 4:00 to 6:00 p.m., on typical weekdays. Additionally, traffic counts were conducted during the Sunday peak hour between the hours of 11:00 AM and 1:30 PM at the California Circle/I-880 NB On and Off Ramps intersection. These traffic counts were taken in fifteen-minute intervals to identify the peak hours of traffic operations at the study intersections.

Level of Service Definitions

Level of service (LOS) is a qualitative measure describing driver satisfaction with a number of factors that influence the degree of traffic congestion. These factors include speed and travel time, traffic interruption, freedom to maneuver, safety, driving comfort and convenience, and delays. Levels of service as applied to roadway links are explained below.

Level of Service A, which is the highest level of service, describes a condition of free flow with low volumes. There is little or no restriction in maneuverability due to the presence of other vehicles, and drivers can maintain their desired speeds with little or no delay. This occurs when vehicle progression is extremely favorable.

Level of Service B, represents a stable traffic flow with operating speeds beginning to be restricted somewhat by traffic conditions, although drivers still have reasonable freedom to select their speed and lane operations. This generally occurs with good vehicle progression.

Level of Service C, which is normally utilized for design purposes, describes a stable condition of traffic operation. It entails moderately restricted movements due to higher traffic volumes, but flow conditions are not objectionable for motorists.

Level of Service D, which is acceptable for traffic operation in urban environments and during peak hours of traffic flow, reflects a more restrictive movement for motorists. Queues and delays may occur during short peaks, but lower demands occur often enough to permit

clearance of developing queues, thus preventing excessive backup. At Level of Service D, the influence of congestion becomes more noticeable.

Level of Service E is defined as the actual capacity of the roadway and involves delay to all motorists due to congestion. This is considered to be the limit of acceptable delay. These high delay values generally indicate poor vehicle progression.

Level of Service F, the lowest level of service, is described as forced flow and is characterized by volumes greater than the roadway capacity. Under this service condition, complete congestion occurs. In an extreme case, the volume passing a given point drops to zero. This is considered unacceptable travel operation.

Signalized Intersections

Levels of Service at signalized intersections are defined in terms of an average stopped delay duration for the intersection as a whole. Here, delay is a measure of driver discomfort and frustration, fuel consumption, and lost travel time. More specifically, level of service criteria for signalized intersections are stated in terms of the average stopped delay per vehicle for a 15-minute analysis period. These criteria are furnished in the *Highway Capacity Manual.*

Delay may be measured in the field, but is usually estimated using procedures presented in the *Highway Capacity Manual.* Delay is a complex measure, and is dependent on a number of variables, including the quality of progression, the cycle length, the green ratio, and the volume/capacity (v/c) ratio for the lane group or approach of interest. On the basis of these delay values, signalized intersection levels of service are defined as follows.

Level of Service A describes operations with very low control delay, up to 10 seconds per vehicle. This LOS occurs when progression is extremely favorable, and when most vehicles arrive during the green phase. In fact, most vehicles do not stop at all. Short cycle lengths may also contribute to low delay.

Level of Service B describes operations with CONTROL delay in the range of 10.1 to 20.0 seconds per vehicle. This LOS generally occurs with good progression and/or short cycle lengths. More vehicles stop than under LOS A conditions, causing higher levels of delay.

Level of Service C describes operations with control delay in the range of 20.1 to 35.0 seconds per vehicle. These higher delay values may result from fair progression and/or longer cycle lengths, and individual cycle failures may begin to appear at this level. The number of vehicles stopping is significant at this service condition, although many still pass through the intersection without stopping.

Level of Service D describes operations with control delay in the range of 35.1 to 55.0 seconds per vehicle. At level of service D, the influence of congestion becomes more noticeable. Longer delays may result from some combination of unfavorable progression,

long cycle lengths, or high v/c ratios. Many vehicles stop, and the proportion of vehicles not stopping steadily declines. Individual cycle failures also become more noticeable.

Level of Service E describes operations with control delay in the range of 55.1 to 80.0 seconds per vehicle. This is considered to be the limit of acceptable delay. These high delay values generally indicate poor progression, long cycle lengths, and high v/c ratios. Individual cycle failures occur frequently under LOS E conditions.

Level of Service F describes operations with control delay in excess of 80.0 seconds per vehicle. This is considered to be unacceptable to most drivers. This condition often occurs with over-saturation of the intersection, i.e., when arrival flow rates exceed the capacity of lane groups. It may also occur at high v/c ratios with many individual cycle failures. Poor progression and long cycle lengths may also be major contributing factors to such delay levels.

Table 2-1
Level of Service Definitions
Signalized Intersections

Level of Service	Vehicle Delay (Seconds)	Description
A	≤10.0	**Free Flow/Insignificant Delays:** No approach phase is fully utilized by traffic and no vehicle waits longer than one red indication.
B	10.1-20.0	**Stable Operation/Minimal Delays:** An occasional approach phase is fully utilized. Many drivers begin to feel somewhat restricted within platoons of vehicles
C	20.1-35.0	**Stable Operation/Acceptable Delays:** Major approach phases fully utilized. Most drivers feel somewhat restricted.
D	35.1-55.0	**Approaching Unstable/Tolerable Delays:** Drivers may have to wait through more than one red signal indication. Queues may develop but dissipate rapidly without excessive delays.
E	55.1-80.0	**Unstable Operation/Significant Delays:** Volumes at or near capacity. Vehicles may wait through several signal cycles. Long queues form upstream from intersection.
F	≥80.0	**Forced Flow/Excessive Delays:** Represents jammed conditions. Intersection operates below capacity with low volumes. Queues may block upstream intersections.

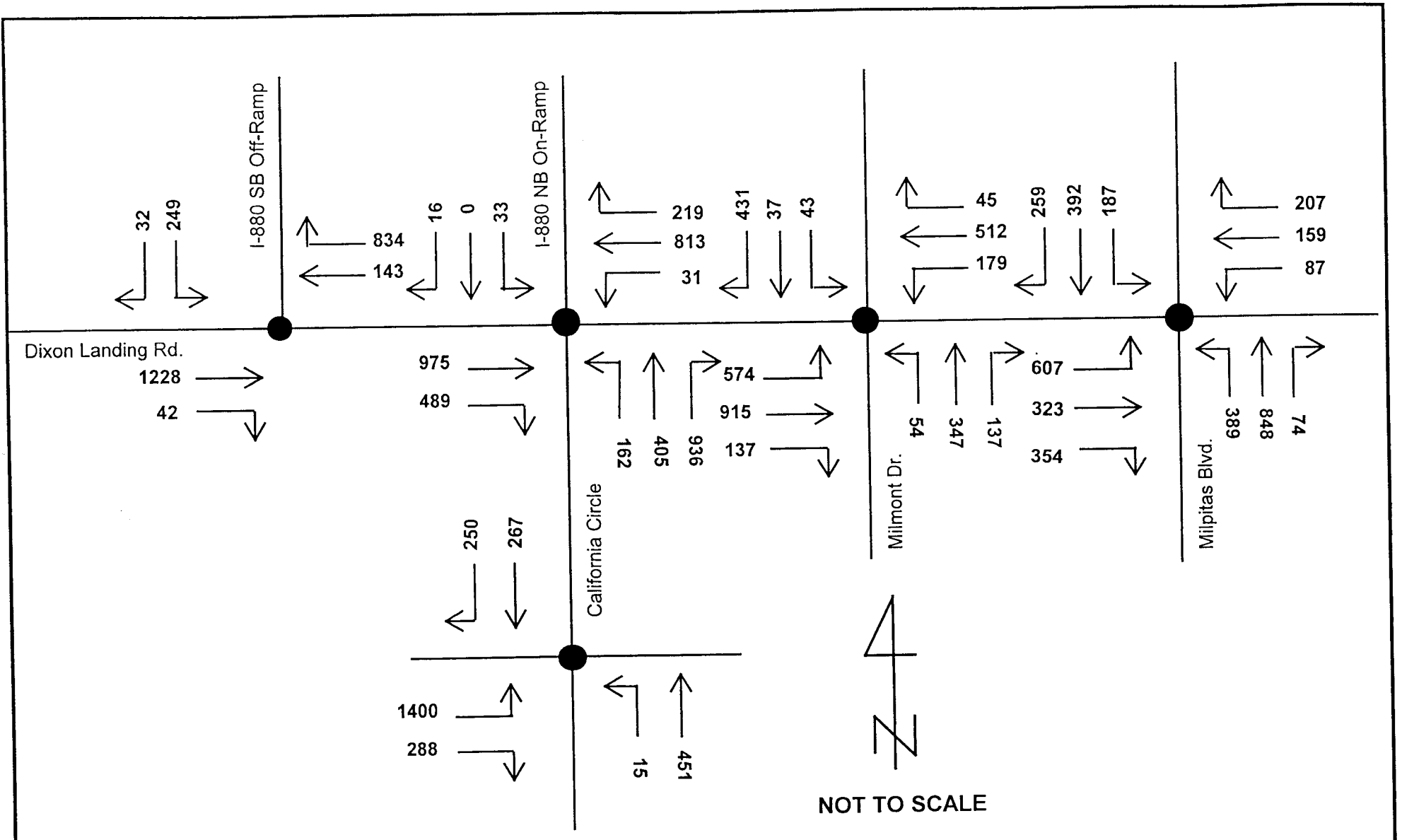

LEGEND

● Signalized Intersection

FIGURE 2-1
EXISTING TRAFFIC CONDITIONS
PM PEAK HOUR
1494-1600 CALIFORNIA CIRCLE
MULTITRANS

Unsignalized Intersections

Unsignalized intersections are evaluated using the criteria presented in the latest edition of the *Highway Capacity Manual.* All-way stop-controlled (AWSC) intersections require that every vehicle stop at the intersection before proceeding. This requirement provides a framework for studying traffic operations at AWSC intersections. Since each driver must stop, the judgment as to whether to proceed into the intersection is a function of the traffic conditions on the other approaches. If no traffic is present on the other approaches, a driver can proceed immediately after the stop is made. If there is traffic on one or more of the other approaches, a driver proceeds only after determining that there are no vehicles currently in the intersection (i.e., it is safe) and that it is his or her turn to proceed. For all-way stop-controlled intersections the overall intersection level of service is calculated, as delays are similar for all movements.

The level of service, of the two-way stop-controlled intersections, is evaluated using a different procedure also using the criteria presented in the latest edition of the *Highway Capacity Manual.* Capacity at two-way stop-controlled (TWSC) intersections depends on a clear description and understanding of the interaction of drivers on the minor or stop-controlled approach with drivers or vehicles on the major street. Both gap acceptance and empirical models have been developed as a means to describe this interaction.

For two-way stop-controlled intersections, the level of service is calculated for each movement that must yield to one or more of other movements. Total delay is defined as the total elapsed time from when a vehicle stops at the end of the queue until the vehicle departs from the stop line. This time includes the time required for the vehicle to travel from the last-in-queue position to the first-in-queue position. The average total delay for any particular minor movement is a function of the service rate or capacity of the approach and the degree of saturation.

TWSC intersections assign the right of way among conflicting traffic streams according to a hierarchy described in the latest edition of the *Highway Capacity Manual.* Generally, the level of service at two-way stop-controlled intersections is defined as the level of service for the movement with the lowest level of service. For this report, both overall intersection and critical movement levels of service are calculated, however, only the lowest levels of service are presented.

Existing Intersection Levels of Service

Existing levels of service at the analysis intersections were calculated in accordance with the procedures set forth and recommended by the HCM level of service methodology for evaluation of signalized intersections. Utilizing the existing traffic data for the study intersections, the existing peak hour levels of service for the study intersections were calculated.

The existing peak hour levels of service of the analysis intersections are summarized in Table 2-2, while detailed level of service analyses for the project are included in Appendix B of this report. As shown in Table 2-2 all intersections are currently operating at level of service D or better during the peak hours.

Table 2-2
Existing Intersection Levels of Service
1494 - 1600 CALIFORNIA CIRCLE

Intersection	PM Peak		Sunday Peak	
	LOS	Delay	LOS	Delay
Dixon Landing Rd./California Circle	C	25.2	-	-
Dixon Landing Rd./I-880 SB Ramp	A	6.8	-	-
Dixon Landing Rd./Milmont Dr.	D	38.9	-	-
Dixon Landing Rd./N. Milpitas Blvd.	D	41.4	-	-
California Circle/I-880 NB On and Off Ramps	B	11.7	A	9.4

Note:

LOS = Level of service

Chapter 3

Background Conditions

The background traffic condition is defined as the condition of traffic at the time of project implementation, without the trips from the proposed project. The procedure used in estimating the background traffic conditions is described in the following paragraphs.

Projection of Background Traffic Volumes

The background traffic volumes for the analysis intersections were estimated for the Year 2008 by applying a growth factor of one percent per year to the existing traffic volumes observed at the study intersections. According to the City of Milpitas staff, there is not any approved project in the vicinity of the project site that has not been constructed. The projected PM peak hour background traffic volumes for the five study intersections are illustrated in Figures 3-1.

Background Intersection Levels of Service

Intersection level of service analyses were performed in accordance with the procedures set forth and recommended by the HCM level of service methodology for evaluation of signalized intersections. HCM level of service methodology was used to evaluate the operation of the study intersections under the anticipated background traffic conditions. Detailed level of service analyses for the background traffic conditions is presented in Appendix B. The results of analyses for the background peak hour conditions are summarized in Table 3-1.

As shown in Table 3-1, all the study intersections will continue to operate at Levels of Service D or better during the peak operating conditions.

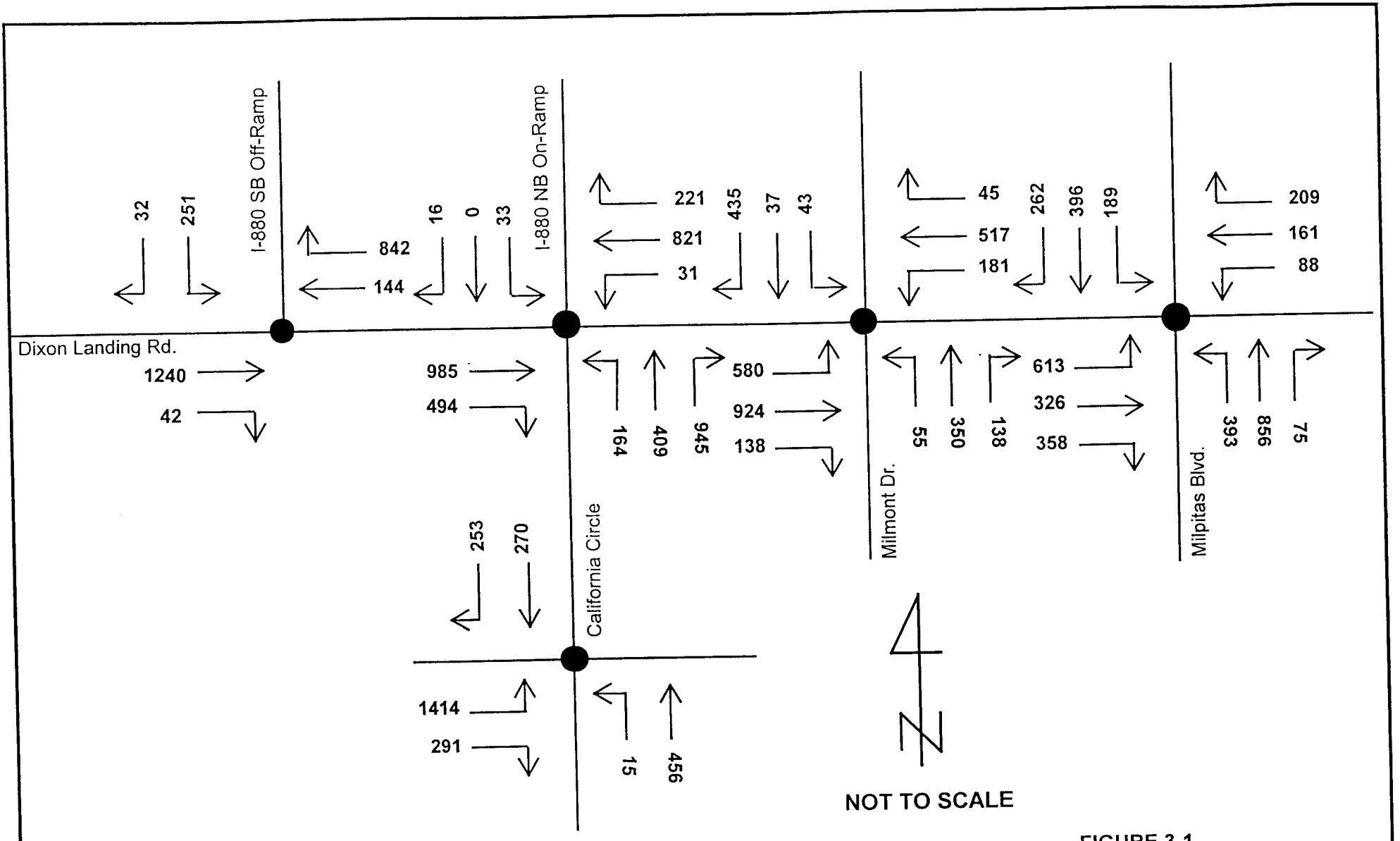

FIGURE 3-1

ANTICIPATED BACKGROUND CONDITIONS

PM PEAK HOUR

1494-1600 CALIFORNIA CIRCLE

MULTITRANS

Table 3-1
Anticipated Background Intersection Levels of Service
1494 - 1600 CALIFORNIA CIRCLE

Intersection	PM Peak		Sunday Peak	
	LOS	Delay	LOS	Delay
Dixon Landing Rd./California Circle	C	25.4	-	-
Dixon Landing Rd./I-880 SB Ramp	A	6.8	-	-
Dixon Landing Rd./Milmont Dr.	D	39.4	-	-
Dixon Landing Rd./N. Milpitas Blvd.	D	42.1	-	-
California Circle/I-880 NB On and Off Ramps	B	11.8	A	9.4

Notes:

LOS = Level of service

Chapter 4

Evaluation of Project Conditions

Anticipated Weekday and Sunday Peak Hour Project Trip Generation

Anticipated weekday and Sunday peak hour trips for the proposed project were estimated based on the trip generation procedures recommended by the *Institute of Transportation Engineers (ITE),* and based on the anticipated operations of the proposed project as presented in Tables 4-3 and 4-4, and the tables incorporated in the Appendix C of this report.

Anticipated Trip Generation -- Sundays

On Sunday, December 17, 2006, MULTITRANS conducted a trip generation study at 1494 California Circle, the existing site of the Korean Baptist Church. The study was conducted for a total of four hours from 10:00 AM to 2:00 PM. As part of this study all the driveways to the existing Church as well as the adjacent lots (i.e., parking lots at 1600 California Circle and parking lots across the street from the Korean Baptist Church) were observed, and the number of vehicles entering the site were recorded at 15-minute intervals. The result of analysis, conducted as part of the trip generation study indicates that between the hours of 10:00 AM and 2:00 PM a total of 249 vehicles accessed the site.

As presented in Table 4-3, a total of 903 people are anticipated to enter the Church during the Sunday peak hour of the adjacent roadway system (i.e., 11:30 AM to 12:30 PM). Based on the trip generation studies conducted at the existing site, the anticipated Sunday peak hour inbound trips are projected to be approximately 436 trips. The anticipated Sunday peak hour outbound trips are approximately 238 trips. It is important to indicate that these trip generation projections include the existing trips generated by the existing Korean Baptist Church. The anticipated trip generation characteristics of the proposed project are illustrated in Table 4-1.

Table 4-1
Anticipated Trip Generation Characteristics of the Project [1]
1494 - 1600 California Circle

Project	Weekday PM Peak Hour Inbound Trips	Weekday PM Peak Hour Outbound Trips	Sunday Peak [2] Hour Inbound Trips	Sunday Peak [3] Hour Outbound Trips
1494-1600 California Circle	10	20	436	238
TOTAL TRIPS	30		674	

Notes:

1 Including the existing trips generated by the project
2 Include a total of 55 existing inbound trips
3 Include a total of 32 existing outbound trips

Anticipated Trip Generation - Weekdays

As presented in Table 4-4 and the tables incorporated in Appendix C, the weekday schedule of the Seminary classes have been developed in a manner that all the classes will be held between 9:30 AM and 3:30 PM, and 6:30 PM and 9:30 PM, to avoid peak commute periods of 7:00 to 9:00 AM and 4:00 to 6:00 PM. Therefore, Seminary students will not have to access or exit the Seminary during the AM or PM peak hours. Only the administrative staff and the Seminary faculty will be commuting during the peak hours, and generating any AM or PM peak hour trips. It is anticipated that, during the weekday PM peak hour, a total of 20 new outbound trips will be generated by the project. The number of new inbound trips will be approximately 10 trips.

Anticipated Site Traffic Distribution

The estimate of an approach/departure routing distribution for site traffic, and the assignment of site traffic to the adjacent roadways are essential in determining the traffic impacts of a proposed development. Based on the observed traffic patterns in the vicinity of the site, and analyses of the existing and projected trips, such distribution was developed for the proposed project trips during the PM and Sunday peak hours. The anticipated trip distribution pattern for the proposed project is presented in Figure 4-1.

Anticipated Traffic Assignment

Through the utilization of the directional distribution in conjunction with the site generated traffic, and adjacent roadway traffic, it was possible to develop the traffic flow that would be expected at the site access roadway system and the analysis intersections, following completion of the proposed project. The combined peak hour projected background traffic volumes plus the "net increase" in peak hour project trips, anticipated to be generated by the proposed project, are shown in Figure 4-2.

Level of Service Analyses – Project Conditions

The adequacy of the existing roadway and site access system was evaluated to determine the need for access and roadway improvements. Volume-to-capacity relationships at the analysis intersections were determined, and the resultant levels of service of the analysis intersections were evaluated using the Highway Capacity Manual methodology. Anticipated background conditions served as a base from which impacts were evaluated.

The anticipated net increases in peak-hour project trips were computed and added to the background volumes to obtain volumes representing project conditions. Table 4-2 presents the results of the intersection level of service analyses conducted for the project condition. As presented in Table 4-2, the intersection of California Circle and I-880 NB Ramps will experience a change in level of service. This intersection is presently operating at LOS A and will be operating at LOS B. However, all the study intersections will be operating at the acceptable levels of service of D or better. Detailed level of service calculations are presented in Appendix B.

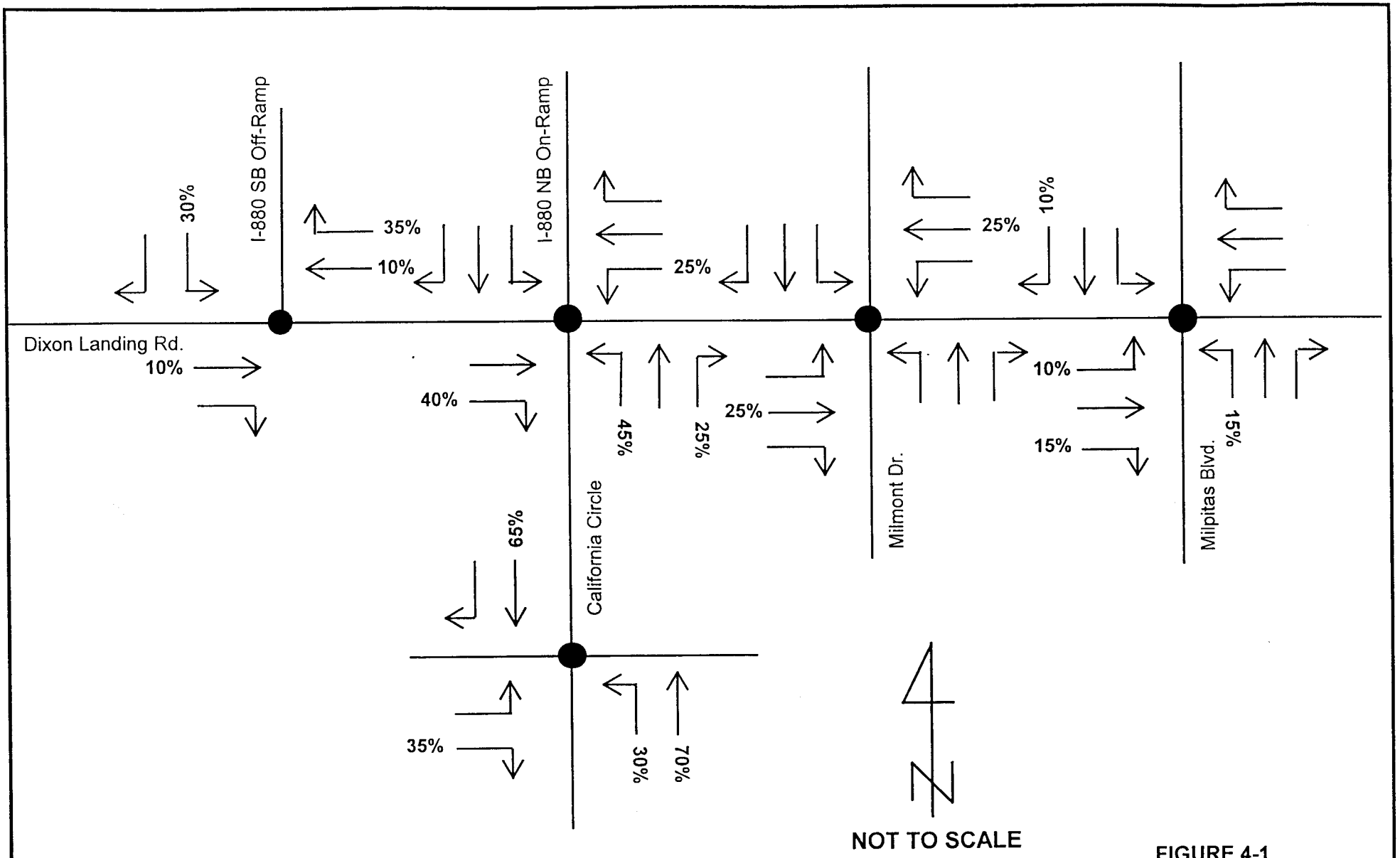

FIGURE 4-1
PROJECT TRIP DISTRIBUTION
PM PEAK HOUR
1494-1600 CALIFORNIA CIRCLE
MULTITRANS

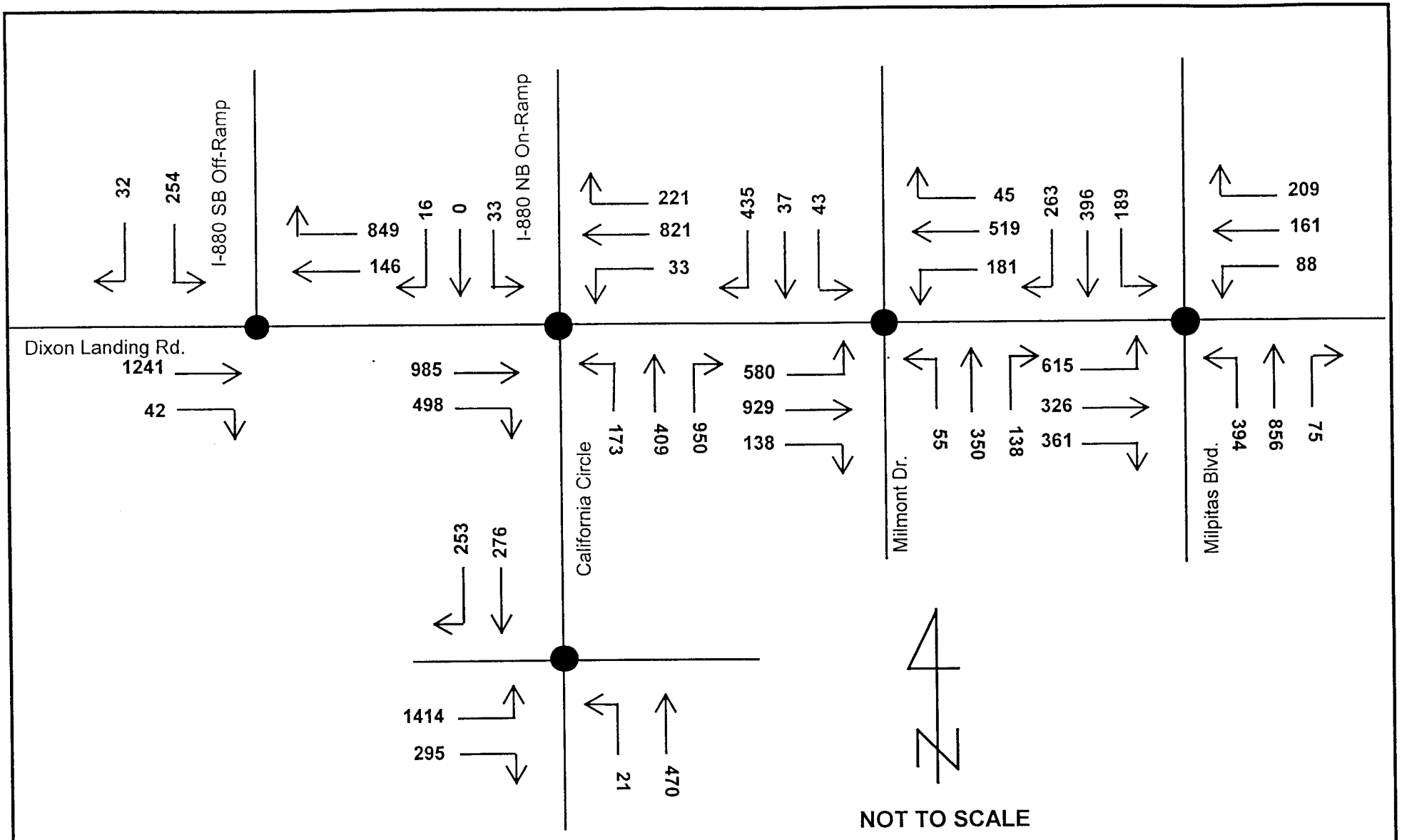

LEGEND

● Signalized Intersection

FIGURE 4-2
ANTICIPATED PROJECT CONDITIONS
PM PEAK HOUR
1494-1600 CALIFORNIA CIRCLE
MULTITRANS

Table 4-2
Anticipated Project Condition Intersection Levels of Service
1494-1600 California Circle Project

Intersection	PM Peak		Sunday Peak	
	LOS	Delay	LOS	Delay
Dixon Landing Rd./California Circle	C	25.6	-	-
Dixon Landing Rd./I-880 SB Ramp	A	6.9	-	-
Dixon Landing Rd./Milmont Dr.	D	39.4	-	-
Dixon Landing Rd./N. Milpitas Blvd.	D	42.1	-	-
California Circle/I-880 NB On and Off Ramps	B	11.2	B	11.8

Notes:

LOS = Level of service

Anticipated Project Parking Requirements

The existing Sanctuary generates a membership assembly of approximately 550 members during a single service on a typical Sunday. The total number of parking spaces provided at the existing site is 228 parking spaces. The proposed project will allow the church to increase the number of Sunday services to a total of two assemblies. First service will be held at about 9:00 AM on Sundays, and a second service will be held during the Sunday afternoon. However, with the addition of the new building the number of parking spaces will also be increased by 150 spaces, to a total of 378 parking spaces.

A total of 378 parking spaces will be provided at the project site. MULTITRANS staff have reviewed the proposed church programs and schedule of classes and other activities proposed for the project. As presented in Table 4-3, the highest parking accumulation on a typical Sunday will occur at about 12:30 PM. Based on the City of Milpitas parking requirement guidelines, approximately 191 parking spaces should be provided.

Additionally, as presented in Table 4-4, the highest levels of parking accumulation on a typical weekday will occur at about 2:30 PM. Based on the City of Milpitas parking requirement guidelines, approximately 370 parking spaces should be provided. Therefore, the parking supply of 378 will be sufficient for anticipated maximum parking demand of 370 parking spaces. However, because the proposed parking supply of 378 spaces is almost equal to the anticipated parking requirements of 370 spaces, the schedule of classes should be developed in a manner so that over lapping of parking demand will not occur during the peak periods of parking demand.

TABLE 4-3

ANTICIPATED PARKING ACCUMULATION - SUNDAY

	08:30	09:30	10:30	11:30	12:30	1:30	02:30	3:30	4:30	5:30	6:30	7:30	8:30	9:30	10:30
1600 CALIFORNIA CIRCLE															
FACULTY AND STAFF	10.0	10.0	23.0	10.0	10.0	23.0	10.0	10.0	10.0	10.0	0.0	0.0	0.0	0.0	0.0
FACULTY AND STAFF PARKING REQUIREMENTS	10.0	10.0	23.0	10.0	10.0	23.0	10.0	10.0	10.0	10.0	0.0	0.0	0.0	0.0	0.0
CHURCH MEMBERS	25.0	890.0	718.0	0.0	740.0	549.0	0.0	0.0	0.0	20.0	20.0	0.0	0.0	0.0	0.0
CHURCH MEMBERS PARKING REQUIREMENTS	5.0	178.0	144.0	0.0	148.0	110.0	0.0	0.0	0.0	4.0	4.0	0.0	0.0	0.0	0.0
TOTAL OCCUPANTS	35.0	900.0	741.0	10.0	750.0	572.0	10.0	10.0	10.0	30.0	20.0	0.0	0.0	0.0	0.0
TOTAL PARKING REQUIREMENTS - 1600 CALIFORNIA CIRCLE	15.0	188.0	167.0	10.0	158.0	133.0	10.0	10.0	10.0	14.0	4.0	0.0	0.0	0.0	0.0
1494 CALIFORNIA CIRCLE															
FACULTY AND STAFF	0.0	0.0	11.0	16.0	3.0	10.0	13.0	0.0	0.0	0.0	0.0	0.0	0.0	0.0	0.0
FACULTY AND STAFF PARKING REQUIREMENTS	0.0	0.0	11.0	16.0	3.0	10.0	13.0	0.0	0.0	0.0	0.0	0.0	0.0	0.0	0.0
CHURCH MEMBERS	0.0	0.0	164.0	467.0	150.0	80.0	217.0	0.0	0.0	0.0	0.0	0.0	0.0	0.0	0.0
CHURCH MEMBERS PARKING REQUIREMENTS	0.0	0.0	33.0	94.0	30.0	16.0	44.0	0.0	0.0	0.0	0.0	0.0	0.0	0.0	0.0
TOTAL OCCUPANTS	0.0	0.0	175.0	483.0	153.0	90.0	230.0	0.0	0.0	0.0	0.0	0.0	0.0	0.0	0.0
TOTAL PARKING REQUIREMENTS - 1494 CALIFORNIA CIRCLE	0.0	0.0	44.0	110.0	33.0	26.0	57.0	0.0	0.0	0.0	0.0	0.0	0.0	0.0	0.0
TOTAL 1494 & 1600 CALIFORNIA CIRCLE															
TOTAL 1494 & 1600 OCCUPANTS	35.0	900.0	916.0	493.0	903.0	662.0	240.0	10.0	10.0	30.0	20.0	0.0	0.0	0.0	0.0
TOTAL PARKING REQUIREMENTS	**15.0**	**188.0**	**211.0**	**120.0**	**191.0**	**159.0**	**67.0**	**10.0**	**10.0**	**14.0**	**4.0**	**0.0**	**0.0**	**0.0**	**0.0**

Source: Sunday operations program presented by the Applicant - Appendix C

TABLE 4-4

ANTICIPATED PARKING ACCUMULATION - WEEKDAYS

	08:30	09:30	10:30	11:30	12:30	1:30	02:30	3:30	4:30	5:30	6:30	7:30	8:30	9:30	10:30
1600 CALIFORNIA CIRCLE															
FACULTY AND STAFF	0.0	10.0	10.0	10.0	10.0	10.0	10.0	10.0	10.0	0.0	0.0	0.0	0.0	0.0	0.0
FACULTY AND STAFF PARKING REQUIREMENTS	0.0	10.0	10.0	10.0	10.0	10.0	10.0	10.0	10.0	0.0	0.0	0.0	0.0	0.0	0.0
STUDENTS	0.0	20.0	20.0	0.0	0.0	0.0	0.0	0.0	0.0	0.0	0.0	0.0	0.0	0.0	0.0
STUDENTS PARKING REQUIREMENTS	0.0	4.0	4.0	0.0	0.0	0.0	0.0	0.0	0.0	0.0	0.0	0.0	0.0	0.0	0.0
TOTAL OCCUPANTS	0.0	30.0	30.0	10.0	10.0	10.0	10.0	10.0	10.0	0.0	0.0	0.0	0.0	0.0	0.0
TOTAL PARKING REQUIREMENTS - 1600 CALIFORNIA CIRCLE	0.0	14.0	14.0	10.0	10.0	10.0	10.0	10.0	10.0	0.0	0.0	0.0	0.0	0.0	0.0
1494 CALIFORNIA CIRCLE															
FACULTY AND STAFF	0.0	7.0	11.0	16.0	18.0	16.0	25.0	23.0	7.0	0.0	18.0	18.0	18.0	0.0	0.0
FACULTY AND STAFF PARKING REQUIREMENTS	0.0	7.0	11.0	16.0	18.0	16.0	25.0	23.0	7.0	0.0	18.0	18.0	18.0	0.0	0.0
STUDENTS	0.0	0.0	76.0	133.0	221.0	343.0	335.0	304.0	0.0	0.0	342.0	342.0	342.0	0.0	0.0
STUDENTS PARKING REQUIREMENTS	0.0	0.0	76.0	133.0	221.0	343.0	335.0	304.0	0.0	0.0	342.0	342.0	342.0	0.0	0.0
TOTAL OCCUPANTS	0.0	0.0	175.0	483.0	153.0	90.0	230.0	0.0	0.0	0.0	0.0	0.0	0.0	0.0	0.0
TOTAL PARKING REQUIREMENTS - 1494 CALIFORNIA CIRCLE	0.0	7.0	87.0	149.0	239.0	359.0	360.0	327.0	7.0	0.0	360.0	360.0	360.0	0.0	0.0
TOTAL 1494 & 1600 CALIFORNIA CIRCLE															
TOTAL 1494 & 1600 OCCUPANTS	0.0	37.0	117.0	159.0	249.0	369.0	370.0	337.0	17.0	0.0	360.0	360.0	360.0	0.0	0.0
TOTAL PARKING REQUIREMENTS	**0.0**	**21.0**	**101.0**	**159.0**	**249.0**	**369.0**	**370.0**	**337.0**	**17.0**	**0.0**	**360.0**	**360.0**	**360.0**	**0.0**	**0.0**

Source: Weekday operations program presented by the Applicant - Appendix C

Chapter 5

Conclusions and Recommendations

Field reconnaissance, traffic counting programs, data collection, and traffic engineering analyses assisted in developing an accurate picture of existing and projected future roadway conditions, and parking and traffic operations in the site environs. The anticipated traffic volumes generated by the proposed project were forecasted and evaluated based upon accepted travel characteristics and guidelines developed by the Institute of Transportation Engineers, and the City of Milpitas. The anticipated net weekday PM peak hour and Sunday peak period project trips, plus projected background traffic were assigned to the roadway system and combined traffic volumes were analyzed to determine roadway adequacy and access requirements.

The analysis of site access and traffic circulation in the area indicates that a satisfactory access plan can be developed and applied to accommodate the existing and anticipated traffic volumes. Implementation of the suggested recommendations in this report will provide efficient and acceptable parking and traffic operations for the site and other traffic on the adjacent roadway system.

This study concludes that when the proposed project is constructed and made operational, and when the proposed mitigation measures are implemented, the public roadway system serving the site, without a significant adverse impact, can accommodate the anticipated traffic volumes that would be generated by the proposed project.

Recommended Mitigation Measures

The proposed site access system was analyzed for adequacy with respect to the anticipated traffic volumes and adjacent roadway system. In considering site access, the primary goal was to identify possible deficiencies in the proposed site access system that would hinder efficient traffic operations for both anticipated site traffic and projected adjacent roadway traffic. Anticipated site ingress and egress movements were studied for safety and efficiency. To properly serve traffic generated by the proposed project, and to provide maximum safety and operating measures, the following mitigation measures and site access guidelines are recommended:

- To prevent generation of new project trips during the weekday AM and PM peak hours, all Seminary classes and other events should be held during the hours of 9:30 AM to 3:30 PM and after 6:30 PM;

- The church should develop a carpool/vanpool program and the members should be encouraged to use the vanpool services or carpool;

- All County of Santa Clara, City of Milpitas, and Caltrans traffic engineering and design standards should be met.

Appendix A

EXISTING TRAFFIC DATA

MULTITRANS
SAN RAMON, CALIFORNIA
(925) 355-7300

JURISDICTION:MILPITAS
INTERSECTION:DIXON LANDING/CALIF. CIRCLE
NORTH/SOUTH ST.:CALIFORNIA CIRCLE
EAST/WEST ST.:DIXON LANDING RD.

File Name : MC01PM
Site Code : 00000001
Start Date : 11/30/2006
Page No : 1

Groups Printed- Unshifted

	CALIFORNIA CIRCLE Southbound				DIXON LANDING RD. Westbound				CALIFORNIA CIRCLE Northbound				DIXON LANDING RD. Eastbound				
Start Time	Right	Thru	Left	App. Total	Right	Thru	Left	App. Total	Right	Thru	Left	App. Total	Right	Thru	Left	App. Total	Int. Total
Factor	1.0	1.0	1.0		1.0	1.0	1.0		1.0	1.0	1.0		1.0	1.0	1.0		
04:00 PM	14	0	10	24	50	155	5	210	276	73	41	390	46	129	0	175	799
04:15 PM	5	0	3	8	44	162	3	209	291	78	38	407	44	182	0	226	850
04:30 PM	4	0	4	8	49	187	9	245	265	74	34	373	63	199	0	262	888
04:45 PM	8	0	8	16	43	177	16	236	271	101	47	419	78	224	0	302	973
Total	31	0	25	56	186	681	33	900	1103	326	160	1589	231	734	0	965	3510
05:00 PM	8	0	14	22	68	209	5	282	260	92	45	397	104	204	0	308	1009
05:15 PM	3	0	5	8	49	191	5	245	237	84	42	363	122	252	0	374	990
05:30 PM	3	0	8	11	56	216	12	284	207	110	34	351	140	251	0	391	1037
05:45 PM	2	0	6	8	46	197	9	252	232	119	41	392	123	268	0	391	1043
Total	16	0	33	49	219	813	31	1063	936	405	162	1503	489	975	0	1464	4079
Grand Total	47	0	58	105	405	1494	64	1963	2039	731	322	3092	720	1709	0	2429	7589
Apprch %	44.8	0.0	55.2		20.6	76.1	3.3		65.9	23.6	10.4		29.6	70.4	0.0		
Total %	0.6	0.0	0.8	1.4	5.3	19.7	0.8	25.9	26.9	9.6	4.2	40.7	9.5	22.5	0.0	32.0	

	CALIFORNIA CIRCLE Southbound				DIXON LANDING RD. Westbound				CALIFORNIA CIRCLE Northbound				DIXON LANDING RD. Eastbound				
Start Time	Right	Thru	Left	App. Total	Right	Thru	Left	App. Total	Right	Thru	Left	App. Total	Right	Thru	Left	App. Total	Int. Total
Peak Hour From 04:00 PM to 05:45 PM - Peak 1 of 1																	
Intersection	05:00 PM																
Volume	16	0	33	49	219	813	31	1063	936	405	162	1503	489	975	0	1464	4079
Percent	32.7	0.0	67.3		20.6	76.5	2.9		62.3	26.9	10.8		33.4	66.6	0.0		
05:45 Volume	2	0	6	8	46	197	9	252	232	119	41	392	123	268	0	391	1043
Peak Factor																	0.978
High Int.	05:00 PM				05:30 PM				05:00 PM				05:30 PM				
Volume	8	0	14	22	56	216	12	284	260	92	45	397	140	251	0	391	
Peak Factor				0.557				0.936				0.946				0.936	

MULTITRANS
SAN RAMON, CALIFORNIA
(925) 355-7300

JURISDICTION:MILPITAS
INTERSECTION:DIXON LANDING/I-880 SB RAMP
NORTH/SOUTH ST.:I-880 SB RAMP
EAST/WEST ST.:DIXON LANDING RD.

File Name : MC02PM
Site Code : 00000002
Start Date : 11/30/2006
Page No : 1

Groups Printed- Unshifted

	I-880 SB RAMP Southbound				DIXON LANDING RD. Westbound				Northbound				DIXON LANDING RD. Eastbound				
Start Time	Right	Thru	Left	App. Total	Right	Thru	Left	App. Total	Right	Thru	Left	App. Total	Right	Thru	Left	App. Total	Int. Total
Factor	1.0	1.0	1.0		1.0	1.0	1.0		1.0	1.0	1.0		1.0	1.0	1.0		
04:00 PM	8	0	50	58	163	30	0	193	0	0	0	0	16	135	0	151	402
04:15 PM	5	0	47	52	162	34	0	196	0	0	0	0	12	169	0	181	429
04:30 PM	8	0	56	64	192	40	0	232	0	0	0	0	10	218	0	228	524
04:45 PM	10	0	69	79	204	49	0	253	0	0	0	0	8	249	0	257	589
Total	31	0	222	253	721	153	0	874	0	0	0	0	46	771	0	817	1944
05:00 PM	5	0	60	65	213	38	0	251	0	0	0	0	16	253	0	269	585
05:15 PM	9	0	57	66	205	35	0	240	0	0	0	0	10	319	0	329	635
05:30 PM	5	0	62	67	209	37	0	246	0	0	0	0	6	331	0	337	650
05:45 PM	13	0	70	83	207	33	0	240	0	0	0	0	10	325	0	335	658
Total	32	0	249	281	834	143	0	977	0	0	0	0	42	1228	0	1270	2528
Grand Total	63	0	471	534	1555	296	0	1851	0	0	0	0	88	1999	0	2087	4472
Apprch %	11.8	0.0	88.2		84.0	16.0	0.0		0.0	0.0	0.0		4.2	95.8	0.0		
Total %	1.4	0.0	10.5	11.9	34.8	6.6	0.0	41.4	0.0	0.0	0.0	0.0	2.0	44.7	0.0	46.7	

	I-880 SB RAMP Southbound				DIXON LANDING RD. Westbound				Northbound				DIXON LANDING RD. Eastbound				
Start Time	Right	Thru	Left	App. Total	Right	Thru	Left	App. Total	Right	Thru	Left	App. Total	Right	Thru	Left	App. Total	Int. Total
Peak Hour From 04:00 PM to 05:45 PM - Peak 1 of 1																	
Intersection	05:00 PM																
Volume	32	0	249	281	834	143	0	977	0	0	0	0	42	1228	0	1270	2528
Percent	11.4	0.0	88.6		85.4	14.6	0.0		0.0	0.0	0.0		3.3	96.7	0.0		
05:45 Volume	13	0	70	83	207	33	0	240	0	0	0	0	10	325	0	335	658
Peak Factor																	0.960
High Int.	05:45 PM				05:00 PM				3:45:00 PM				05:30 PM				
Volume	13	0	70	83	213	38	0	251	0	0	0	0	6	331	0	337	
Peak Factor				0.846				0.973								0.942	

MULTITRANS
SAN RAMON, CALIFORNIA
(925) 355-7300

JURISDICTION:MILPITAS
INTERSECTION:DIXON LANDING/MILMONT
NORTH/SOUTH ST.:MILMONT DR.
EAST/WEST ST.:DIXON LANDING RD.

File Name : MC03PM
Site Code : 00000003
Start Date : 11/15/2006
Page No : 1

Groups Printed- Unshifted

	MILMONT DR. Southbound				DIXON LANDING RD. Westbound				MILMONT DR. Northbound				DIXON LANDING RD. Eastbound				
Start Time	Right	Thru	Left	App. Total	Right	Thru	Left	App. Total	Right	Thru	Left	App. Total	Right	Thru	Left	App. Total	Int. Total
Factor	1.0	1.0	1.0		1.0	1.0	1.0		1.0	1.0	1.0		1.0	1.0	1.0		
04:00 PM	83	3	6	92	8	99	39	146	12	22	11	45	21	232	173	426	709
04:15 PM	82	7	6	95	6	88	28	122	19	9	4	32	5	212	171	388	637
04:30 PM	102	9	17	128	2	136	26	164	19	25	10	54	13	221	154	388	734
04:45 PM	100	3	12	115	10	133	39	182	30	43	12	85	22	240	140	402	784
Total	367	22	41	430	26	456	132	614	80	99	37	216	61	905	638	1604	2864
05:00 PM	129	10	19	158	8	146	47	201	40	63	11	114	28	224	133	385	858
05:15 PM	96	14	8	118	9	121	37	167	34	95	15	144	32	240	143	415	844
05:30 PM	112	5	9	126	15	124	44	183	37	100	11	148	39	203	141	383	840
05:45 PM	94	8	7	109	13	121	51	185	26	89	17	132	38	248	157	443	869
Total	431	37	43	511	45	512	179	736	137	347	54	538	137	915	574	1626	3411
Grand Total	798	59	84	941	71	968	311	1350	217	446	91	754	198	1820	1212	3230	6275
Apprch %	84.8	6.3	8.9		5.3	71.7	23.0		28.8	59.2	12.1		6.1	56.3	37.5		
Total %	12.7	0.9	1.3	15.0	1.1	15.4	5.0	21.5	3.5	7.1	1.5	12.0	3.2	29.0	19.3	51.5	

	MILMONT DR. Southbound				DIXON LANDING RD. Westbound				MILMONT DR. Northbound				DIXON LANDING RD. Eastbound				
Start Time	Right	Thru	Left	App. Total	Right	Thru	Left	App. Total	Right	Thru	Left	App. Total	Right	Thru	Left	App. Total	Int. Total
Peak Hour From 04:00 PM to 05:45 PM - Peak 1 of 1																	
Intersection	05:00 PM																
Volume	431	37	43	511	45	512	179	736	137	347	54	538	137	915	574	1626	3411
Percent	84.3	7.2	8.4		6.1	69.6	24.3		25.5	64.5	10.0		8.4	56.3	35.3		
05:45 Volume	94	8	7	109	13	121	51	185	26	89	17	132	38	248	157	443	869
Peak Factor																	0.981
High Int.	05:00 PM				05:00 PM				05:30 PM				05:45 PM				
Volume	129	10	19	158	8	146	47	201	37	100	11	148	38	248	157	443	
Peak Factor				0.809				0.915				0.909				0.918	

MULTITRANS
SAN RAMON, CALIFORNIA
(925) 355-7300

JURISDICTION:MILPITAS
INTERSECTION:DIXON LANDING/N. MILPITAS
NORTH/SOUTH ST.:N. MILPITAS BLVD.
EAST/WEST ST.:DIXON LANDING RD.

File Name : MC04PM
Site Code : 00000004
Start Date : 11/15/2006
Page No : 1

Groups Printed- Unshifted

	N. MILPITAS BLVD. Southbound				DIXON LANDING RD. Westbound				N. MILPITAS BLVD. Northbound				DIXON LANDING RD. Eastbound				
Start Time	Right	Thru	Left	App. Total	Right	Thru	Left	App. Total	Right	Thru	Left	App. Total	Right	Thru	Left	App. Total	Int. Total
Factor	1.0	1.0	1.0		1.0	1.0	1.0		1.0	1.0	1.0		1.0	1.0	1.0		
04:00 PM	50	62	27	139	42	34	15	91	12	110	77	199	67	56	134	257	686
04:15 PM	54	62	30	146	34	36	13	83	15	96	62	173	67	68	178	313	715
04:30 PM	79	95	52	226	38	25	15	78	11	146	72	229	88	69	143	300	833
04:45 PM	65	95	43	203	23	30	17	70	15	132	96	243	79	77	152	308	824
Total	248	314	152	714	137	125	60	322	53	484	307	844	301	270	607	1178	3058
05:00 PM	72	102	48	222	40	46	27	113	17	201	99	317	79	66	136	281	933
05:15 PM	52	81	46	179	52	42	20	114	25	198	83	306	96	82	163	341	940
05:30 PM	72	121	58	251	57	36	18	111	18	238	110	366	89	66	128	283	1011
05:45 PM	63	88	35	186	58	35	22	115	14	211	97	322	90	109	180	379	1002
Total	259	392	187	838	207	159	87	453	74	848	389	1311	354	323	607	1284	3886
Grand Total	507	706	339	1552	344	284	147	775	127	1332	696	2155	655	593	1214	2462	6944
Apprch %	32.7	45.5	21.8		44.4	36.6	19.0		5.9	61.8	32.3		26.6	24.1	49.3		
Total %	7.3	10.2	4.9	22.4	5.0	4.1	2.1	11.2	1.8	19.2	10.0	31.0	9.4	8.5	17.5	35.5	

	N. MILPITAS BLVD. Southbound				DIXON LANDING RD. Westbound				N. MILPITAS BLVD. Northbound				DIXON LANDING RD. Eastbound				
Start Time	Right	Thru	Left	App. Total	Right	Thru	Left	App. Total	Right	Thru	Left	App. Total	Right	Thru	Left	App. Total	Int. Total
Peak Hour From 04:00 PM to 05:45 PM - Peak 1 of 1																	
Intersection	05:00 PM																
Volume	259	392	187	838	207	159	87	453	74	848	389	1311	354	323	607	1284	3886
Percent	30.9	46.8	22.3		45.7	35.1	19.2		5.6	64.7	29.7		27.6	25.2	47.3		
05:30 Volume	72	121	58	251	57	36	18	111	18	238	110	366	89	66	128	283	1011
Peak Factor																	0.961
High Int.	05:30 PM				05:45 PM				05:30 PM				05:45 PM				
Volume	72	121	58	251	58	35	22	115	18	238	110	366	90	109	180	379	
Peak Factor				0.835				0.985				0.895				0.847	

MULTITRANS
SAN RAMON, CALIFORNIA
(925) 355-7300

JURISDICTION:MILPITAS
INTERSECTION:CA. CIR/I-880NB ON & OFF
NORTH/SOUTH ST.:CALIFORNIA CIRCLE
EAST/WEST ST.:I-880N AND I-880S RAMPS

File Name : MC05
Site Code : 00000005
Start Date : 11/15/2006
Page No : 1

Groups Printed- Unshifted

	CALIFORNIA CIRCLE Southbound				Westbound				CALIFORNIA CIRCLE Northbound				I-880 NB OFF RAMP Eastbound				
Start Time	Right	Thru	Left	App. Total	Right	Thru	Left	App. Total	Right	Thru	Left	App. Total	Right	Thru	Left	App. Total	Int. Total
Factor	1.0	1.0	1.0		1.0	1.0	1.0		1.0	1.0	1.0		1.0	1.0	1.0		
04:00 PM	36	21	0	57	0	0	0	0	0	61	8	69	44	0	371	415	541
04:15 PM	51	17	0	68	0	0	0	0	0	49	3	52	34	0	353	387	507
04:30 PM	41	38	0	79	0	0	0	0	0	82	2	84	33	0	340	373	536
04:45 PM	68	45	0	113	0	0	0	0	0	71	3	74	54	0	405	459	646
Total	196	121	0	317	0	0	0	0	0	263	16	279	165	0	1469	1634	2230
05:00 PM	57	41	0	98	0	0	0	0	0	121	7	128	50	0	352	402	628
05:15 PM	60	77	0	137	0	0	0	0	0	122	2	124	60	0	326	386	647
05:30 PM	68	73	0	141	0	0	0	0	0	118	6	124	84	0	364	448	713
05:45 PM	65	76	0	141	0	0	0	0	0	90	0	90	94	0	358	452	683
Total	250	267	0	517	0	0	0	0	0	451	15	466	288	0	1400	1688	2671
Grand Total	446	388	0	834	0	0	0	0	0	714	31	745	453	0	2869	3322	4901
Apprch %	53.5	46.5	0.0		0.0	0.0	0.0		0.0	95.8	4.2		13.6	0.0	86.4		
Total %	9.1	7.9	0.0	17.0	0.0	0.0	0.0	0.0	0.0	14.6	0.6	15.2	9.2	0.0	58.5	67.8	

	CALIFORNIA CIRCLE Southbound				Westbound				CALIFORNIA CIRCLE Northbound				I-880 NB OFF RAMP Eastbound				
Start Time	Right	Thru	Left	App. Total	Right	Thru	Left	App. Total	Right	Thru	Left	App. Total	Right	Thru	Left	App. Total	Int. Total
Peak Hour From 04:00 PM to 05:45 PM - Peak 1 of 1																	
Intersection	05:00 PM																
Volume	250	267	0	517	0	0	0	0	0	451	15	466	288	0	1400	1688	2671
Percent	48.4	51.6	0.0		0.0	0.0	0.0		0.0	96.8	3.2		17.1	0.0	82.9		
05:30 Volume	68	73	0	141	0	0	0	0	0	118	6	124	84	0	364	448	713
Peak Factor																	0.937
High Int.	05:30 PM				3:45:00 PM				05:00 PM				05:45 PM				
Volume	68	73	0	141	0	0	0	0	0	121	7	128	94	0	358	452	
Peak Factor				0.917								0.910				0.934	

MULTITRANS
SAN RAMON, CALIFORNIA
(925) 355-7300

JURISDICTION:MILPITAS
INTERSECTION:CALIFORNIA CIRCLE/I-880
NORTH/SOUTH ST.:CALIFORNIA CIRCLE
EAST/WEST ST.:I-880N AND I-880S RAMPS

File Name : MC05WE
Site Code : 00000005
Start Date : 12/17/2006
Page No : 1

Groups Printed- Unshifted

	CALIFORNIA CIRCLE Southbound				Westbound				CALIFORNIA CIRCLE Northbound				I-880 OFF-RAMP Eastbound				
Start Time	Right	Thru	Left	App. Total	Right	Thru	Left	App. Total	Right	Thru	Left	App. Total	Right	Thru	Left	App. Total	Int. Total
Factor	1.0	1.0	1.0		1.0	1.0	1.0		1.0	1.0	1.0		1.0	1.0	1.0		
11:00 AM	9	22	0	31	0	0	0	0	0	64	14	78	26	0	91	117	226
11:15 AM	17	19	0	36	0	0	0	0	0	40	11	51	25	0	83	108	195
11:30 AM	20	27	0	47	0	0	0	0	0	36	8	44	33	0	77	110	201
11:45 AM	12	36	0	48	0	0	0	0	0	67	12	79	70	0	91	161	288
Total	58	104	0	162	0	0	0	0	0	207	45	252	154	0	342	496	910
12:00 PM	18	46	0	64	0	0	0	0	0	56	13	69	41	0	85	126	259
12:15 PM	20	31	0	51	0	0	0	0	0	43	1	44	28	0	78	106	201
12:30 PM	9	21	0	30	0	0	0	0	0	40	6	46	29	0	91	120	196
12:45 PM	19	12	0	31	0	0	0	0	0	28	6	34	29	0	102	131	196
Total	66	110	0	176	0	0	0	0	0	167	26	193	127	0	356	483	852
01:00 PM	21	15	0	36	0	0	0	0	0	26	7	33	28	0	110	138	207
01:15 PM	29	22	0	51	0	0	0	0	0	30	7	37	24	0	93	117	205
Grand Total	174	251	0	425	0	0	0	0	0	430	85	515	333	0	901	1234	2174
Apprch %	40.9	59.1	0.0		0.0	0.0	0.0		0.0	83.5	16.5		27.0	0.0	73.0		
Total %	8.0	11.5	0.0	19.5	0.0	0.0	0.0	0.0	0.0	19.8	3.9	23.7	15.3	0.0	41.4	56.8	

	CALIFORNIA CIRCLE Southbound				Westbound				CALIFORNIA CIRCLE Northbound				I-880 OFF-RAMP Eastbound				
Start Time	Right	Thru	Left	App. Total	Right	Thru	Left	App. Total	Right	Thru	Left	App. Total	Right	Thru	Left	App. Total	Int. Total
Peak Hour From 11:00 AM to 01:15 PM - Peak 1 of 1																	
Intersection	11:30 AM																
Volume	70	140	0	210	0	0	0	0	0	202	34	236	172	0	331	503	949
Percent	33.3	66.7	0.0		0.0	0.0	0.0		0.0	85.6	14.4		34.2	0.0	65.8		
11:45 Volume	12	36	0	48	0	0	0	0	0	67	12	79	70	0	91	161	288
Peak Factor																	0.824
High Int.	12:00 PM				10:45:00 AM				11:45 AM				11:45 AM				
Volume	18	46	0	64	0	0	0	0	0	67	12	79	70	0	91	161	
Peak Factor				0.820								0.747				0.781	

Appendix B

INTERSECTION LEVEL OF SERVICE ANALYSES

Level Of Service Computation Report
2000 HCM Operations Method (Future Volume Alternative)

Intersection #1 DIXON LANDING RD./CALIFORNIA CIRCLE

Cycle (sec): 105 Critical Vol./Cap. (X): 0.544
Loss Time (sec): 0 (Y+R = 4 sec) Average Delay (sec/veh): 25.2
Optimal Cycle:OPTIMIZED Level Of Service: C

Street Name:	CALIFORNIA CIRCLE						DIXON LANDING RD.					
Approach:	North Bound			South Bound			East Bound			West Bound		
Movement:	L - T - R			L - T - R			L - T - R			L - T - R		
Control:	Split Phase			Split Phase			Protected			Protected		
Rights:	Include			Include			Include			Include		
Min. Green:	20	20	0	10	10	0	0	45	0	10	45	0
Lanes:	1 1 0	0 2		1 1 0	0 1		0 0 3	0 1		1 0 2	1 0	
Volume Module: >> Count Date: 30 Nov 2006 << 4:00 TO 6:00 PM												
Base Vol:	162	405	936	33	0	16	0	975	489	31	813	219
Growth Adj:	1.00	1.00	1.00	1.00	1.00	1.00	1.00	1.00	1.00	1.00	1.00	1.00
Initial Bse:	162	405	936	33	0	16	0	975	489	31	813	219
Added Vol:	0	0	0	0	0	0	0	0	0	0	0	0
PasserByVol:	0	0	0	0	0	0	0	0	0	0	0	0
Initial Fut:	162	405	936	33	0	16	0	975	489	31	813	219
User Adj:	1.00	1.00	1.00	1.00	1.00	1.00	1.00	1.00	1.00	1.00	1.00	1.00
PHF Adj:	1.00	1.00	1.00	1.00	1.00	1.00	1.00	1.00	1.00	1.00	1.00	1.00
PHF Volume:	162	405	936	33	0	16	0	975	489	31	813	219
Reduct Vol:	0	0	0	0	0	0	0	0	0	0	0	0
Reduced Vol:	162	405	936	33	0	16	0	975	489	31	813	219
PCE Adj:	1.00	1.00	1.00	1.00	1.00	1.00	1.00	1.00	1.00	1.00	1.00	1.00
MLF Adj:	1.00	1.00	1.00	1.00	1.00	1.00	1.00	1.00	1.00	1.00	1.00	1.00
Final Vol.:	162	405	936	33	0	16	0	975	489	31	813	219
Saturation Flow Module:												
Sat/Lane:	1900	1900	1900	1900	1900	1900	1900	1900	1900	1900	1900	1900
Adjustment:	0.99	0.99	0.75	0.95	1.00	0.85	1.00	0.91	0.85	0.95	0.88	0.88
Lanes:	1.00	1.00	2.00	2.00	0.00	1.00	0.00	3.00	1.00	1.00	2.36	0.64
Final Sat.:	1873	1873	2842	3618	0	1615	0	5187	1615	1805	3956	1066
Capacity Analysis Module:												
Vol/Sat:	0.09	0.22	0.33	0.01	0.00	0.01	0.00	0.19	0.30	0.02	0.21	0.21
Crit Moves:			****	****				****		****		
Green/Cycle:	0.38	0.38	0.38	0.10	0.00	0.10	0.00	0.43	0.43	0.10	0.52	0.52
Volume/Cap:	0.23	0.57	0.86	0.10	0.00	0.10	0.00	0.44	0.71	0.18	0.39	0.39
Uniform Del:	22.0	25.7	30.0	43.4	0.0	43.4	0.0	21.1	24.6	43.7	15.0	15.0
IncremntDel:	0.0	0.8	7.4	0.1	0.0	0.3	0.0	0.1	3.4	0.5	0.1	0.1
InitQueuDel:	0.0	0.0	0.0	0.0	0.0	0.0	0.0	0.0	0.0	0.0	0.0	0.0
Delay Adj:	1.00	1.00	1.00	1.00	0.00	1.00	0.00	1.00	1.00	1.00	1.00	1.00
Delay/Veh:	22.1	26.4	37.4	43.5	0.0	43.7	0.0	21.3	27.9	44.2	15.1	15.1
User DelAdj:	1.00	1.00	1.00	1.00	1.00	1.00	1.00	1.00	1.00	1.00	1.00	1.00
AdjDel/Veh:	22.1	26.4	37.4	43.5	0.0	43.7	0.0	21.3	27.9	44.2	15.1	15.1
HCM2kAvg:	4	11	17	1	0	1	0	7	14	1	7	7

Level Of Service Computation Report
2000 HCM Operations Method (Future Volume Alternative)

Intersection #2 DIXON LANDING RD./I-880 SB RAMP

Cycle (sec): 105 Critical Vol./Cap. (X): 0.317
Loss Time (sec): 0 (Y+R = 4 sec) Average Delay (sec/veh): 6.8
Optimal Cycle: 35 Level Of Service: A

Street Name:	I-880 SB RAMP						DIXON LANDING RD.					
Approach:	North Bound			South Bound			East Bound			West Bound		
Movement:	L - T - R			L - T - R			L - T - R			L - T - R		
Control:	Protected			Protected			Protected			Protected		
Rights:	Include			Include			Include			Include		
Min. Green:	0	0	0	10	0	10	0	25	0	0	25	0
Lanes:	0 0 0 0 0			2 0 0 0 2			0 0 2 1 0			0 0 2 0 3		
Volume Module:												
Base Vol:	0	0	0	249	0	32	0	1228	42	0	143	834
Growth Adj:	1.00	1.00	1.00	1.00	1.00	1.00	1.00	1.00	1.00	1.00	1.00	1.00
Initial Bse:	0	0	0	249	0	32	0	1228	42	0	143	834
Added Vol:	0	0	0	0	0	0	0	0	0	0	0	0
PasserByVol:	0	0	0	0	0	0	0	0	0	0	0	0
Initial Fut:	0	0	0	249	0	32	0	1228	42	0	143	834
User Adj:	1.00	1.00	1.00	1.00	1.00	1.00	1.00	1.00	1.00	1.00	1.00	1.00
PHF Adj:	1.00	1.00	1.00	1.00	1.00	1.00	1.00	1.00	1.00	1.00	1.00	1.00
PHF Volume:	0	0	0	249	0	32	0	1228	42	0	143	834
Reduct Vol:	0	0	0	0	0	0	0	0	0	0	0	0
Reduced Vol:	0	0	0	249	0	32	0	1228	42	0	143	834
PCE Adj:	1.00	1.00	1.00	1.00	1.00	1.00	1.00	1.00	1.00	1.00	1.00	1.00
MLF Adj:	1.00	1.00	1.00	1.00	1.00	1.00	1.00	1.00	1.00	1.00	1.00	1.00
Final Vol.:	0	0	0	249	0	32	0	1228	42	0	143	834
Saturation Flow Module:												
Sat/Lane:	1900	1900	1900	1900	1900	1900	1900	1900	1900	1900	1900	1900
Adjustment:	1.00	1.00	1.00	0.92	1.00	0.75	1.00	0.91	0.91	1.00	0.95	0.75
Lanes:	0.00	0.00	0.00	2.00	0.00	2.00	0.00	2.90	0.10	0.00	2.00	3.00
Final Sat.:	0	0	0	3502	0	2842	0	4990	171	0	3610	4264
Capacity Analysis Module:												
Vol/Sat:	0.00	0.00	0.00	0.07	0.00	0.01	0.00	0.25	0.25	0.00	0.04	0.20
Crit Moves:				****				****		****		
Green/Cycle:	0.00	0.00	0.00	0.22	0.00	0.22	0.00	0.78	0.78	0.00	0.78	0.78
Volume/Cap:	0.00	0.00	0.00	0.32	0.00	0.05	0.00	0.32	0.32	0.00	0.05	0.25
Uniform Del:	0.0	0.0	0.0	34.0	0.0	32.0	0.0	3.5	3.5	0.0	2.7	3.3
IncremntDel:	0.0	0.0	0.0	0.2	0.0	0.0	0.0	0.0	0.0	0.0	0.0	0.0
InitQueuDel:	0.0	0.0	0.0	0.0	0.0	0.0	0.0	0.0	0.0	0.0	0.0	0.0
Delay Adj:	0.00	0.00	0.00	1.00	0.00	1.00	0.00	1.00	1.00	0.00	1.00	1.00
Delay/Veh:	0.0	0.0	0.0	34.3	0.0	32.0	0.0	3.5	3.5	0.0	2.8	3.3
User DelAdj:	1.00	1.00	1.00	1.00	1.00	1.00	1.00	1.00	1.00	1.00	1.00	1.00
AdjDel/Veh:	0.0	0.0	0.0	34.3	0.0	32.0	0.0	3.5	3.5	0.0	2.8	3.3
HCM2kAvg:	0	0	0	4	0	0	0	4	4	0	1	3

Level Of Service Computation Report
2000 HCM Operations Method (Future Volume Alternative)

Intersection #3 DIXON LANDING RD./MILMONT DR.

Cycle (sec):	110	Critical Vol./Cap. (X):	0.771
Loss Time (sec):	0 (Y+R = 4 sec)	Average Delay (sec/veh):	38.9
Optimal Cycle:OPTIMIZED		Level Of Service:	D

Street Name:	MILMONT DR.						DIXON LANDING RD.					
Approach:	North Bound			South Bound			East Bound			West Bound		
Movement:	L - T - R			L - T - R			L - T - R			L - T - R		
Control:	Protected			Protected			Protected			Protected		
Rights:	Include			Include			Include			Include		
Min. Green:	10	20	0	10	20	0	10	30	0	10	30	0
Lanes:	1 0	1 0	1	1 0	1 0	1	1 0	1 1	0	2 0	1 1	0
Volume Module: >> Count Date: 15 Nov 2006 << PM PEAK HOUR												
Base Vol:	54	347	137	43	37	431	574	915	137	179	512	45
Growth Adj:	1.00	1.00	1.00	1.00	1.00	1.00	1.00	1.00	1.00	1.00	1.00	1.00
Initial Bse:	54	347	137	43	37	431	574	915	137	179	512	45
Added Vol:	0	0	0	0	0	0	0	0	0	0	0	0
PasserByVol:	0	0	0	0	0	0	0	0	0	0	0	0
Initial Fut:	54	347	137	43	37	431	574	915	137	179	512	45
User Adj:	1.00	1.00	1.00	1.00	1.00	1.00	1.00	1.00	1.00	1.00	1.00	1.00
PHF Adj:	1.00	1.00	1.00	1.00	1.00	1.00	1.00	1.00	1.00	1.00	1.00	1.00
PHF Volume:	54	347	137	43	37	431	574	915	137	179	512	45
Reduct Vol:	0	0	0	0	0	0	0	0	0	0	0	0
Reduced Vol:	54	347	137	43	37	431	574	915	137	179	512	45
PCE Adj:	1.00	1.00	1.00	1.00	1.00	1.00	1.00	1.00	1.00	1.00	1.00	1.00
MLF Adj:	1.00	1.00	1.00	1.00	1.00	1.00	1.00	1.00	1.00	1.00	1.00	1.00
Final Vol.:	54	347	137	43	37	431	574	915	137	179	512	45
Saturation Flow Module:												
Sat/Lane:	1900	1900	1900	1900	1900	1900	1900	1900	1900	1900	1900	1900
Adjustment:	0.95	1.00	0.85	0.95	1.00	0.85	0.95	0.93	0.93	0.92	0.94	0.94
Lanes:	1.00	1.00	1.00	1.00	1.00	1.00	1.00	1.74	0.26	2.00	1.84	0.16
Final Sat.:	1805	1900	1615	1805	1900	1615	1805	3080	461	3502	3279	288
Capacity Analysis Module:												
Vol/Sat:	0.03	0.18	0.08	0.02	0.02	0.27	0.32	0.30	0.30	0.05	0.16	0.16
Crit Moves:	****					****	****				****	
Green/Cycle:	0.09	0.25	0.25	0.13	0.29	0.29	0.35	0.47	0.47	0.14	0.27	0.27
Volume/Cap:	0.33	0.72	0.33	0.19	0.07	0.92	0.92	0.63	0.63	0.35	0.57	0.57
Uniform Del:	46.9	37.4	33.4	43.0	28.2	37.8	34.5	21.7	21.7	42.4	34.5	34.5
IncremntDel:	1.2	5.1	0.5	0.4	0.1	23.2	18.8	0.8	0.8	0.4	0.8	0.8
InitQueuDel:	0.0	0.0	0.0	0.0	0.0	0.0	0.0	0.0	0.0	0.0	0.0	0.0
Delay Adj:	1.00	1.00	1.00	1.00	1.00	1.00	1.00	1.00	1.00	1.00	1.00	1.00
Delay/Veh:	48.0	42.5	33.9	43.4	28.3	61.0	53.3	22.4	22.4	42.8	35.3	35.3
User DelAdj:	1.00	1.00	1.00	1.00	1.00	1.00	1.00	1.00	1.00	1.00	1.00	1.00
AdjDel/Veh:	48.0	42.5	33.9	43.4	28.3	61.0	53.3	22.4	22.4	42.8	35.3	35.3
HCM2kAvg:	2	12	4	1	1	18	24	14	14	3	9	9

Level Of Service Computation Report
2000 HCM Operations Method (Future Volume Alternative)

Intersection #4 DIXON LANDING RD./MILPITAS BLVD.

Cycle (sec): 105 Critical Vol./Cap. (X): 0.869
Loss Time (sec): 0 (Y+R = 4 sec) Average Delay (sec/veh): 41.4
Optimal Cycle: 174 Level Of Service: D

Street Name:	MILPITAS BLVD.						DIXON LANDING RD.					
Approach:	North Bound			South Bound			East Bound			West Bound		
Movement:	L - T - R			L - T - R			L - T - R			L - T - R		
Control:	Protected			Protected			Split Phase			Split Phase		
Rights:	Include			Include			Include			Include		
Min. Green:	10	25	0	10	25	0	40	40	40	8	8	8
Lanes:	1 0 1	1 0		1 0 1	1 0		1 0 1	1 0		1 0 1	1 0	
Volume Module: >> Count Date: 15 Nov 2006 << PM PEAK HOUR												
Base Vol:	389	848	74	187	392	259	607	323	354	87	159	207
Growth Adj:	1.00	1.00	1.00	1.00	1.00	1.00	1.00	1.00	1.00	1.00	1.00	1.00
Initial Bse:	389	848	74	187	392	259	607	323	354	87	159	207
Added Vol:	0	0	0	0	0	0	0	0	0	0	0	0
PasserByVol:	0	0	0	0	0	0	0	0	0	0	0	0
Initial Fut:	389	848	74	187	392	259	607	323	354	87	159	207
User Adj:	1.00	1.00	1.00	1.00	1.00	1.00	1.00	1.00	1.00	1.00	1.00	1.00
PHF Adj:	1.00	1.00	1.00	1.00	1.00	1.00	1.00	1.00	1.00	1.00	1.00	1.00
PHF Volume:	389	848	74	187	392	259	607	323	354	87	159	207
Reduct Vol:	0	0	0	0	0	0	0	0	0	0	0	0
Reduced Vol:	389	848	74	187	392	259	607	323	354	87	159	207
PCE Adj:	1.00	1.00	1.00	1.00	1.00	1.00	1.00	1.00	1.00	1.00	1.00	1.00
MLF Adj:	1.00	1.00	1.00	1.00	1.00	1.00	1.00	1.00	1.00	1.00	1.00	1.00
Final Vol.:	389	848	74	187	392	259	607	323	354	87	159	207
Saturation Flow Module:												
Sat/Lane:	1900	1900	1900	1900	1900	1900	1900	1900	1900	1900	1900	1900
Adjustment:	0.95	0.94	0.94	0.95	0.89	0.89	0.95	0.88	0.88	0.95	0.87	0.87
Lanes:	1.00	1.84	0.16	1.00	1.20	0.80	1.00	1.00	1.00	1.00	1.00	1.00
Final Sat.:	1805	3280	286	1805	2043	1350	1805	1664	1664	1805	1652	1652
Capacity Analysis Module:												
Vol/Sat:	0.22	0.26	0.26	0.10	0.19	0.19	0.34	0.19	0.21	0.05	0.10	0.13
Crit Moves:	****				****		****					****
Green/Cycle:	0.24	0.34	0.34	0.14	0.24	0.24	0.38	0.38	0.38	0.14	0.14	0.14
Volume/Cap:	0.89	0.76	0.76	0.76	0.81	0.81	0.88	0.51	0.56	0.34	0.69	0.89
Uniform Del:	38.6	30.7	30.7	43.6	37.7	37.7	30.3	25.0	25.6	40.8	43.0	44.4
IncremntDel:	20.4	2.8	2.8	12.5	6.0	6.0	12.9	0.3	0.6	0.8	3.8	21.4
InitQueuDel:	0.0	0.0	0.0	0.0	0.0	0.0	0.0	0.0	0.0	0.0	0.0	0.0
Delay Adj:	1.00	1.00	1.00	1.00	1.00	1.00	1.00	1.00	1.00	1.00	1.00	1.00
Delay/Veh:	59.0	33.4	33.4	56.1	43.7	43.7	43.2	25.3	26.1	41.6	46.7	65.8
User DelAdj:	1.00	1.00	1.00	1.00	1.00	1.00	1.00	1.00	1.00	1.00	1.00	1.00
AdjDel/Veh:	59.0	33.4	33.4	56.1	43.7	43.7	43.2	25.3	26.1	41.6	46.7	65.8
HCM2kAvg:	16	15	15	8	12	12	22	8	9	3	6	10

Level Of Service Computation Report
2000 HCM Operations Method (Future Volume Alternative)

Intersection #5 CALIFORNIA CIRCLE/I-880 NB ON & OFF RAMPS

Cycle (sec):	0	Critical Vol./Cap. (X):	0.563
Loss Time (sec):	0 (Y+R = 4 sec)	Average Delay (sec/veh):	11.7
Optimal Cycle:	55	Level Of Service:	B

Street Name:	CALIFORNIA CIRCLE						I-880 NB ON & OFF RAMPS					
Approach:	North Bound			South Bound			East Bound			West Bound		
Movement:	L - T - R			L - T - R			L - T - R			L - T - R		
Control:	Protected			Protected			Protected			Protected		
Rights:	Include			Include			Include			Include		
Min. Green:	10	15	0	0	15	0	30	0	30	0	0	0
Lanes:	1 0 2 0 0			0 0 1 1 0			2 0 0 0 1			0 0 0 0 0		
Volume Module: >> Count Date: 15 Nov 2006 << 4:00 TO 6:00 PM												
Base Vol:	15	451	0	0	267	250	1400	0	288	0	0	0
Growth Adj:	1.00	1.00	1.00	1.00	1.00	1.00	1.00	1.00	1.00	1.00	1.00	1.00
Initial Bse:	15	451	0	0	267	250	1400	0	288	0	0	0
Added Vol:	0	0	0	0	0	0	0	0	0	0	0	0
PasserByVol:	0	0	0	0	0	0	0	0	0	0	0	0
Initial Fut:	15	451	0	0	267	250	1400	0	288	0	0	0
User Adj:	1.00	1.00	1.00	1.00	1.00	1.00	1.00	1.00	1.00	1.00	1.00	1.00
PHF Adj:	1.00	1.00	1.00	1.00	1.00	1.00	1.00	1.00	1.00	1.00	1.00	1.00
PHF Volume:	15	451	0	0	267	250	1400	0	288	0	0	0
Reduct Vol:	0	0	0	0	0	0	0	0	0	0	0	0
Reduced Vol:	15	451	0	0	267	250	1400	0	288	0	0	0
PCE Adj:	1.00	1.00	1.00	1.00	1.00	1.00	1.00	1.00	1.00	1.00	1.00	1.00
MLF Adj:	1.00	1.00	1.00	1.00	1.00	1.00	1.00	1.00	1.00	1.00	1.00	1.00
Final Vol.:	15	451	0	0	267	250	1400	0	288	0	0	0
Saturation Flow Module:												
Sat/Lane:	1900	1900	1900	1900	1900	1900	1900	1900	1900	1900	1900	1900
Adjustment:	0.95	0.95	1.00	1.00	0.88	0.88	0.92	1.00	0.85	1.00	1.00	1.00
Lanes:	1.00	2.00	0.00	0.00	1.03	0.97	2.00	0.00	1.00	0.00	0.00	0.00
Final Sat.:	1805	3610	0	0	1728	1618	3502	0	1615	0	0	0
Capacity Analysis Module:												
Vol/Sat:	0.01	0.12	0.00	0.00	0.15	0.15	0.40	0.00	0.18	0.00	0.00	0.00
Crit Moves:	****				****		****					
Green/Cycle:	0.18	0.45	0.00	0.00	0.27	0.27	0.55	0.00	0.55	0.00	0.00	0.00
Volume/Cap:	0.05	0.27	0.00	0.00	0.57	0.57	0.73	0.00	0.33	0.00	0.00	0.00
Uniform Del:	18.6	9.3	0.0	0.0	17.2	17.2	9.5	0.0	6.9	0.0	0.0	0.0
IncremntDel:	0.1	0.1	0.0	0.0	0.8	0.8	1.5	0.0	0.2	0.0	0.0	0.0
InitQueuDel:	0.0	0.0	0.0	0.0	0.0	0.0	0.0	0.0	0.0	0.0	0.0	0.0
Delay Adj:	1.00	1.00	0.00	0.00	1.00	1.00	1.00	0.00	1.00	0.00	0.00	0.00
Delay/Veh:	18.6	9.4	0.0	0.0	18.0	18.0	11.0	0.0	7.1	0.0	0.0	0.0
User DelAdj:	1.00	1.00	1.00	1.00	1.00	1.00	1.00	1.00	1.00	1.00	1.00	1.00
AdjDel/Veh:	18.6	9.4	0.0	0.0	18.0	18.0	11.0	0.0	7.1	0.0	0.0	0.0
HCM2kAvg:	0	3	0	0	5	5	11	0	3	0	0	0

Level Of Service Computation Report
2000 HCM Operations Method (Future Volume Alternative)

Intersection #5 CALIFORNIA CIRCLE/I-880 NB ON & OFF RAMPS

Cycle (sec): 0 Critical Vol./Cap. (X): 0.187
Loss Time (sec): 0 (Y+R = 4 sec) Average Delay (sec/veh): 9.4
Optimal Cycle:OPTIMIZED Level Of Service: A

Street Name:	CALIFORNIA CIRCLE						I-880 NB ON & OFF RAMPS					
Approach:	North Bound			South Bound			East Bound			West Bound		
Movement:	L - T - R			L - T - R			L - T - R			L - T - R		
Control:	Protected			Protected			Protected			Protected		
Rights:	Include			Include			Include			Include		
Min. Green:	10	15	0	0	15	0	30	0	30	0	0	0
Lanes:	1 0 2 0 0			0 0 1 1 0			2 0 0 0 1			0 0 0 0 0		
Volume Module: >> Count Date: 15 Nov 2006 << 4:00 TO 6:00 PM												
Base Vol:	34	202	0	0	140	70	331	0	172	0	0	0
Growth Adj:	1.00	1.00	1.00	1.00	1.00	1.00	1.00	1.00	1.00	1.00	1.00	1.00
Initial Bse:	34	202	0	0	140	70	331	0	172	0	0	0
Added Vol:	0	0	0	0	0	0	0	0	0	0	0	0
PasserByVol:	0	0	0	0	0	0	0	0	0	0	0	0
Initial Fut:	34	202	0	0	140	70	331	0	172	0	0	0
User Adj:	1.00	1.00	1.00	1.00	1.00	1.00	1.00	1.00	1.00	1.00	1.00	1.00
PHF Adj:	1.00	1.00	1.00	1.00	1.00	1.00	1.00	1.00	1.00	1.00	1.00	1.00
PHF Volume:	34	202	0	0	140	70	331	0	172	0	0	0
Reduct Vol:	0	0	0	0	0	0	0	0	0	0	0	0
Reduced Vol:	34	202	0	0	140	70	331	0	172	0	0	0
PCE Adj:	1.00	1.00	1.00	1.00	1.00	1.00	1.00	1.00	1.00	1.00	1.00	1.00
MLF Adj:	1.00	1.00	1.00	1.00	1.00	1.00	1.00	1.00	1.00	1.00	1.00	1.00
Final Vol.:	34	202	0	0	140	70	331	0	172	0	0	0
Saturation Flow Module:												
Sat/Lane:	1900	1900	1900	1900	1900	1900	1900	1900	1900	1900	1900	1900
Adjustment:	0.95	0.95	1.00	1.00	0.90	0.90	0.92	1.00	0.85	1.00	1.00	1.00
Lanes:	1.00	2.00	0.00	0.00	1.33	0.67	2.00	0.00	1.00	0.00	0.00	0.00
Final Sat.:	1805	3610	0	0	2286	1143	3502	0	1615	0	0	0
Capacity Analysis Module:												
Vol/Sat:	0.02	0.06	0.00	0.00	0.06	0.06	0.09	0.00	0.11	0.00	0.00	0.00
Crit Moves:	****				****				****			
Green/Cycle:	0.18	0.45	0.00	0.00	0.27	0.27	0.55	0.00	0.55	0.00	0.00	0.00
Volume/Cap:	0.10	0.12	0.00	0.00	0.22	0.22	0.17	0.00	0.20	0.00	0.00	0.00
Uniform Del:	18.8	8.7	0.0	0.0	15.5	15.5	6.3	0.0	6.4	0.0	0.0	0.0
IncremntDel:	0.1	0.0	0.0	0.0	0.1	0.1	0.0	0.0	0.1	0.0	0.0	0.0
InitQueuDel:	0.0	0.0	0.0	0.0	0.0	0.0	0.0	0.0	0.0	0.0	0.0	0.0
Delay Adj:	1.00	1.00	0.00	0.00	1.00	1.00	1.00	0.00	1.00	0.00	0.00	0.00
Delay/Veh:	18.9	8.7	0.0	0.0	15.6	15.6	6.3	0.0	6.5	0.0	0.0	0.0
User DelAdj:	1.00	1.00	1.00	1.00	1.00	1.00	1.00	1.00	1.00	1.00	1.00	1.00
AdjDel/Veh:	18.9	8.7	0.0	0.0	15.6	15.6	6.3	0.0	6.5	0.0	0.0	0.0
HCM2kAvg:	1	1	0	0	2	2	2	0	2	0	0	0

Level Of Service Computation Report
2000 HCM Operations Method (Future Volume Alternative)

Intersection #1 DIXON LANDING RD./CALIFORNIA CIRCLE

Cycle (sec): 105 Critical Vol./Cap. (X): 0.549
Loss Time (sec): 0 (Y+R = 4 sec) Average Delay (sec/veh): 25.4
Optimal Cycle:OPTIMIZED Level Of Service: C

Street Name:	CALIFORNIA CIRCLE						DIXON LANDING RD.					
Approach:	North Bound			South Bound			East Bound			West Bound		
Movement:	L - T - R			L - T - R			L - T - R			L - T - R		
Control:	Split Phase			Split Phase			Protected			Protected		
Rights:	Include			Include			Include			Include		
Min. Green:	20	20	0	10	10	0	0	45	0	10	45	0
Lanes:	1 1	0 0	2	1 1	0 0	1	0 0	3 0	1	1 0	2 1	0
Volume Module: >> Count Date: 30 Nov 2006 << 4:00 TO 6:00 PM												
Base Vol:	164	409	945	33	0	16	0	985	494	31	821	221
Growth Adj:	1.00	1.00	1.00	1.00	1.00	1.00	1.00	1.00	1.00	1.00	1.00	1.00
Initial Bse:	164	409	945	33	0	16	0	985	494	31	821	221
Added Vol:	0	0	0	0	0	0	0	0	0	0	0	0
PasserByVol:	0	0	0	0	0	0	0	0	0	0	0	0
Initial Fut:	164	409	945	33	0	16	0	985	494	31	821	221
User Adj:	1.00	1.00	1.00	1.00	1.00	1.00	1.00	1.00	1.00	1.00	1.00	1.00
PHF Adj:	1.00	1.00	1.00	1.00	1.00	1.00	1.00	1.00	1.00	1.00	1.00	1.00
PHF Volume:	164	409	945	33	0	16	0	985	494	31	821	221
Reduct Vol:	0	0	0	0	0	0	0	0	0	0	0	0
Reduced Vol:	164	409	945	33	0	16	0	985	494	31	821	221
PCE Adj:	1.00	1.00	1.00	1.00	1.00	1.00	1.00	1.00	1.00	1.00	1.00	1.00
MLF Adj:	1.00	1.00	1.00	1.00	1.00	1.00	1.00	1.00	1.00	1.00	1.00	1.00
Final Vol.:	164	409	945	33	0	16	0	985	494	31	821	221
Saturation Flow Module:												
Sat/Lane:	1900	1900	1900	1900	1900	1900	1900	1900	1900	1900	1900	1900
Adjustment:	0.99	0.99	0.75	0.95	1.00	0.85	1.00	0.91	0.85	0.95	0.88	0.88
Lanes:	1.00	1.00	2.00	2.00	0.00	1.00	0.00	3.00	1.00	1.00	2.36	0.64
Final Sat.:	1873	1873	2842	3618	0	1615	0	5187	1615	1805	3956	1065
Capacity Analysis Module:												
Vol/Sat:	0.09	0.22	0.33	0.01	0.00	0.01	0.00	0.19	0.31	0.02	0.21	0.21
Crit Moves:			****	****				****		****		
Green/Cycle:	0.38	0.38	0.38	0.10	0.00	0.10	0.00	0.43	0.43	0.10	0.52	0.52
Volume/Cap:	0.23	0.57	0.87	0.10	0.00	0.10	0.00	0.44	0.71	0.18	0.40	0.40
Uniform Del:	22.0	25.7	30.1	43.4	0.0	43.4	0.0	21.2	24.7	43.7	15.0	15.0
IncremntDel:	0.0	0.8	8.0	0.1	0.0	0.3	0.0	0.1	3.5	0.5	0.1	0.1
InitQueuDel:	0.0	0.0	0.0	0.0	0.0	0.0	0.0	0.0	0.0	0.0	0.0	0.0
Delay Adj:	1.00	1.00	1.00	1.00	0.00	1.00	0.00	1.00	1.00	1.00	1.00	1.00
Delay/Veh:	22.1	26.5	38.1	43.5	0.0	43.7	0.0	21.3	28.2	44.2	15.1	15.1
User DelAdj:	1.00	1.00	1.00	1.00	1.00	1.00	1.00	1.00	1.00	1.00	1.00	1.00
AdjDel/Veh:	22.1	26.5	38.1	43.5	0.0	43.7	0.0	21.3	28.2	44.2	15.1	15.1
HCM2kAvg:	4	11	17	1	0	1	0	8	14	1	7	7

Traffix 7.7.0715 (c) 2004 Dowling Assoc. Licensed to MULTITRANS, WALNUT CREEK

Level Of Service Computation Report
2000 HCM Operations Method (Future Volume Alternative)

Intersection #2 DIXON LANDING RD./I-880 SB RAMP

Cycle (sec): 105 Critical Vol./Cap. (X): 0.320
Loss Time (sec): 0 (Y+R = 4 sec) Average Delay (sec/veh): 6.8
Optimal Cycle: 35 Level Of Service: A

Street Name:	I-880 SB RAMP						DIXON LANDING RD.					
Approach:	North Bound			South Bound			East Bound			West Bound		
Movement:	L - T - R			L - T - R			L - T - R			L - T - R		
Control:	Protected			Protected			Protected			Protected		
Rights:	Include			Include			Include			Include		
Min. Green:	0	0	0	10	0	10	0	25	0	0	25	0
Lanes:	0 0	0 0	0	2 0	0 0	2	0 0	2 1	0	0 0	2 0	3
Volume Module:												
Base Vol:	0	0	0	251	0	32	0	1240	42	0	144	842
Growth Adj:	1.00	1.00	1.00	1.00	1.00	1.00	1.00	1.00	1.00	1.00	1.00	1.00
Initial Bse:	0	0	0	251	0	32	0	1240	42	0	144	842
Added Vol:	0	0	0	0	0	0	0	0	0	0	0	0
PasserByVol:	0	0	0	0	0	0	0	0	0	0	0	0
Initial Fut:	0	0	0	251	0	32	0	1240	42	0	144	842
User Adj:	1.00	1.00	1.00	1.00	1.00	1.00	1.00	1.00	1.00	1.00	1.00	1.00
PHF Adj:	1.00	1.00	1.00	1.00	1.00	1.00	1.00	1.00	1.00	1.00	1.00	1.00
PHF Volume:	0	0	0	251	0	32	0	1240	42	0	144	842
Reduct Vol:	0	0	0	0	0	0	0	0	0	0	0	0
Reduced Vol:	0	0	0	251	0	32	0	1240	42	0	144	842
PCE Adj:	1.00	1.00	1.00	1.00	1.00	1.00	1.00	1.00	1.00	1.00	1.00	1.00
MLF Adj:	1.00	1.00	1.00	1.00	1.00	1.00	1.00	1.00	1.00	1.00	1.00	1.00
Final Vol.:	0	0	0	251	0	32	0	1240	42	0	144	842
Saturation Flow Module:												
Sat/Lane:	1900	1900	1900	1900	1900	1900	1900	1900	1900	1900	1900	1900
Adjustment:	1.00	1.00	1.00	0.92	1.00	0.75	1.00	0.91	0.91	1.00	0.95	0.75
Lanes:	0.00	0.00	0.00	2.00	0.00	2.00	0.00	2.90	0.10	0.00	2.00	3.00
Final Sat.:	0	0	0	3502	0	2842	0	4992	169	0	3610	4264
Capacity Analysis Module:												
Vol/Sat:	0.00	0.00	0.00	0.07	0.00	0.01	0.00	0.25	0.25	0.00	0.04	0.20
Crit Moves:				****				****		****		
Green/Cycle:	0.00	0.00	0.00	0.22	0.00	0.22	0.00	0.78	0.78	0.00	0.78	0.78
Volume/Cap:	0.00	0.00	0.00	0.32	0.00	0.05	0.00	0.32	0.32	0.00	0.05	0.25
Uniform Del:	0.0	0.0	0.0	34.1	0.0	32.0	0.0	3.5	3.5	0.0	2.7	3.3
IncremntDel:	0.0	0.0	0.0	0.2	0.0	0.0	0.0	0.0	0.0	0.0	0.0	0.0
InitQueuDel:	0.0	0.0	0.0	0.0	0.0	0.0	0.0	0.0	0.0	0.0	0.0	0.0
Delay Adj:	0.00	0.00	0.00	1.00	0.00	1.00	0.00	1.00	1.00	0.00	1.00	1.00
Delay/Veh:	0.0	0.0	0.0	34.3	0.0	32.0	0.0	3.5	3.5	0.0	2.7	3.3
User DelAdj:	1.00	1.00	1.00	1.00	1.00	1.00	1.00	1.00	1.00	1.00	1.00	1.00
AdjDel/Veh:	0.0	0.0	0.0	34.3	0.0	32.0	0.0	3.5	3.5	0.0	2.7	3.3
HCM2kAvg:	0	0	0	4	0	0	0	4	4	0	1	3

Traffix 7.7.0715 (c) 2004 Dowling Assoc. Licensed to MULTITRANS, WALNUT CREEK

Level Of Service Computation Report
2000 HCM Operations Method (Future Volume Alternative)

Intersection #3 DIXON LANDING RD./MILMONT DR.

Cycle (sec):	110	Critical Vol./Cap. (X):	0.779
Loss Time (sec):	0 (Y+R = 4 sec)	Average Delay (sec/veh):	39.4
Optimal Cycle:	103	Level Of Service:	D

Street Name:	MILMONT DR.						DIXON LANDING RD.					
Approach:	North Bound			South Bound			East Bound			West Bound		
Movement:	L - T - R			L - T - R			L - T - R			L - T - R		
Control:	Protected			Protected			Protected			Protected		
Rights:	Include			Include			Include			Include		
Min. Green:	10	20	0	10	20	0	10	30	0	10	30	0
Lanes:	1 0 1 0 1			1 0 1 0 1			1 0 1 1 0			2 0 1 1 0		
Volume Module: >> Count Date: 15 Nov 2006 << PM PEAK HOUR												
Base Vol:	55	350	138	43	37	435	580	924	138	181	517	45
Growth Adj:	1.00	1.00	1.00	1.00	1.00	1.00	1.00	1.00	1.00	1.00	1.00	1.00
Initial Bse:	55	350	138	43	37	435	580	924	138	181	517	45
Added Vol:	0	0	0	0	0	0	0	0	0	0	0	0
PasserByVol:	0	0	0	0	0	0	0	0	0	0	0	0
Initial Fut:	55	350	138	43	37	435	580	924	138	181	517	45
User Adj:	1.00	1.00	1.00	1.00	1.00	1.00	1.00	1.00	1.00	1.00	1.00	1.00
PHF Adj:	1.00	1.00	1.00	1.00	1.00	1.00	1.00	1.00	1.00	1.00	1.00	1.00
PHF Volume:	55	350	138	43	37	435	580	924	138	181	517	45
Reduct Vol:	0	0	0	0	0	0	0	0	0	0	0	0
Reduced Vol:	55	350	138	43	37	435	580	924	138	181	517	45
PCE Adj:	1.00	1.00	1.00	1.00	1.00	1.00	1.00	1.00	1.00	1.00	1.00	1.00
MLF Adj:	1.00	1.00	1.00	1.00	1.00	1.00	1.00	1.00	1.00	1.00	1.00	1.00
Final Vol.:	55	350	138	43	37	435	580	924	138	181	517	45
Saturation Flow Module:												
Sat/Lane:	1900	1900	1900	1900	1900	1900	1900	1900	1900	1900	1900	1900
Adjustment:	0.95	1.00	0.85	0.95	1.00	0.85	0.95	0.93	0.93	0.92	0.94	0.94
Lanes:	1.00	1.00	1.00	1.00	1.00	1.00	1.00	1.74	0.26	2.00	1.84	0.16
Final Sat.:	1805	1900	1615	1805	1900	1615	1805	3081	460	3502	3281	286
Capacity Analysis Module:												
Vol/Sat:	0.03	0.18	0.09	0.02	0.02	0.27	0.32	0.30	0.30	0.05	0.16	0.16
Crit Moves:	****					****	****				****	
Green/Cycle:	0.09	0.26	0.26	0.13	0.29	0.29	0.35	0.47	0.47	0.14	0.27	0.27
Volume/Cap:	0.34	0.72	0.33	0.19	0.07	0.93	0.93	0.63	0.63	0.36	0.58	0.58
Uniform Del:	46.9	37.4	33.4	43.0	28.3	37.9	34.6	21.7	21.7	42.5	34.5	34.5
IncremntDel:	1.2	5.3	0.5	0.4	0.1	24.8	20.3	0.8	0.8	0.4	0.9	0.9
InitQueuDel:	0.0	0.0	0.0	0.0	0.0	0.0	0.0	0.0	0.0	0.0	0.0	0.0
Delay Adj:	1.00	1.00	1.00	1.00	1.00	1.00	1.00	1.00	1.00	1.00	1.00	1.00
Delay/Veh:	48.1	42.7	33.8	43.5	28.3	62.8	54.9	22.4	22.4	42.9	35.4	35.4
User DelAdj:	1.00	1.00	1.00	1.00	1.00	1.00	1.00	1.00	1.00	1.00	1.00	1.00
AdjDel/Veh:	48.1	42.7	33.8	43.5	28.3	62.8	54.9	22.4	22.4	42.9	35.4	35.4
HCM2kAvg:	2	12	4	1	1	18	24	14	14	3	9	9

Level Of Service Computation Report
2000 HCM Operations Method (Future Volume Alternative)

Intersection #4 DIXON LANDING RD./MILPITAS BLVD.

Cycle (sec): 105 Critical Vol./Cap. (X): 0.878
Loss Time (sec): 0 (Y+R = 4 sec) Average Delay (sec/veh): 42.1
Optimal Cycle: 180 Level Of Service: D

Street Name:	MILPITAS BLVD.						DIXON LANDING RD.					
Approach:	North Bound			South Bound			East Bound			West Bound		
Movement:	L - T - R			L - T - R			L - T - R			L - T - R		
Control:	Protected			Protected			Split Phase			Split Phase		
Rights:	Include			Include			Include			Include		
Min. Green:	10	25	0	10	25	0	40	40	40	8	8	8
Lanes:	1 0 1	1 0		1 0 1	1 0		1 0 1	1 0		1 0 1	1 0	
Volume Module: >> Count Date: 15 Nov 2006 << PM PEAK HOUR												
Base Vol:	393	856	75	189	396	262	613	326	358	88	161	209
Growth Adj:	1.00	1.00	1.00	1.00	1.00	1.00	1.00	1.00	1.00	1.00	1.00	1.00
Initial Bse:	393	856	75	189	396	262	613	326	358	88	161	209
Added Vol:	0	0	0	0	0	0	0	0	0	0	0	0
PasserByVol:	0	0	0	0	0	0	0	0	0	0	0	0
Initial Fut:	393	856	75	189	396	262	613	326	358	88	161	209
User Adj:	1.00	1.00	1.00	1.00	1.00	1.00	1.00	1.00	1.00	1.00	1.00	1.00
PHF Adj:	1.00	1.00	1.00	1.00	1.00	1.00	1.00	1.00	1.00	1.00	1.00	1.00
PHF Volume:	393	856	75	189	396	262	613	326	358	88	161	209
Reduct Vol:	0	0	0	0	0	0	0	0	0	0	0	0
Reduced Vol:	393	856	75	189	396	262	613	326	358	88	161	209
PCE Adj:	1.00	1.00	1.00	1.00	1.00	1.00	1.00	1.00	1.00	1.00	1.00	1.00
MLF Adj:	1.00	1.00	1.00	1.00	1.00	1.00	1.00	1.00	1.00	1.00	1.00	1.00
Final Vol.:	393	856	75	189	396	262	613	326	358	88	161	209
Saturation Flow Module:												
Sat/Lane:	1900	1900	1900	1900	1900	1900	1900	1900	1900	1900	1900	1900
Adjustment:	0.95	0.94	0.94	0.95	0.89	0.89	0.95	0.88	0.88	0.95	0.87	0.87
Lanes:	1.00	1.84	0.16	1.00	1.20	0.80	1.00	1.00	1.00	1.00	1.00	1.00
Final Sat.:	1805	3279	287	1805	2042	1351	1805	1664	1664	1805	1652	1652
Capacity Analysis Module:												
Vol/Sat:	0.22	0.26	0.26	0.10	0.19	0.19	0.34	0.20	0.22	0.05	0.10	0.13
Crit Moves:	****				****		****					****
Green/Cycle:	0.24	0.34	0.34	0.14	0.24	0.24	0.38	0.38	0.38	0.14	0.14	0.14
Volume/Cap:	0.90	0.76	0.76	0.76	0.81	0.81	0.89	0.51	0.56	0.35	0.70	0.90
Uniform Del:	38.7	30.8	30.8	43.7	37.8	37.8	30.5	25.0	25.6	40.8	43.0	44.5
IncremntDel:	21.8	2.9	2.9	13.1	6.4	6.4	13.8	0.3	0.6	0.8	4.0	22.9
InitQueuDel:	0.0	0.0	0.0	0.0	0.0	0.0	0.0	0.0	0.0	0.0	0.0	0.0
Delay Adj:	1.00	1.00	1.00	1.00	1.00	1.00	1.00	1.00	1.00	1.00	1.00	1.00
Delay/Veh:	60.5	33.7	33.7	56.8	44.2	44.2	44.3	25.4	26.3	41.7	47.0	67.3
User DelAdj:	1.00	1.00	1.00	1.00	1.00	1.00	1.00	1.00	1.00	1.00	1.00	1.00
AdjDel/Veh:	60.5	33.7	33.7	56.8	44.2	44.2	44.3	25.4	26.3	41.7	47.0	67.3
HCM2kAvg:	17	15	15	8	12	12	23	8	9	3	6	10

Level Of Service Computation Report
2000 HCM Operations Method (Future Volume Alternative)

Intersection #5 CALIFORNIA CIRCLE/I-880 NB ON & OFF RAMPS

Cycle (sec): 0 Critical Vol./Cap. (X): 0.568
Loss Time (sec): 0 (Y+R = 4 sec) Average Delay (sec/veh): 11.8
Optimal Cycle:OPTIMIZED Level Of Service: B

Street Name:	CALIFORNIA CIRCLE						I-880 NB ON & OFF RAMPS					
Approach:	North Bound			South Bound			East Bound			West Bound		
Movement:	L - T - R			L - T - R			L - T - R			L - T - R		
Control:	Protected			Protected			Protected			Protected		
Rights:	Include			Include			Include			Include		
Min. Green:	10	15	0	0	15	0	30	0	30	0	0	0
Lanes:	1 0 2 0 0			0 0 1 1 0			2 0 0 0 1			0 0 0 0 0		
Volume Module: >> Count Date: 15 Nov 2006 << 4:00 TO 6:00 PM												
Base Vol:	15	456	0	0	270	253	1414	0	291	0	0	0
Growth Adj:	1.00	1.00	1.00	1.00	1.00	1.00	1.00	1.00	1.00	1.00	1.00	1.00
Initial Bse:	15	456	0	0	270	253	1414	0	291	0	0	0
Added Vol:	0	0	0	0	0	0	0	0	0	0	0	0
PasserByVol:	0	0	0	0	0	0	0	0	0	0	0	0
Initial Fut:	15	456	0	0	270	253	1414	0	291	0	0	0
User Adj:	1.00	1.00	1.00	1.00	1.00	1.00	1.00	1.00	1.00	1.00	1.00	1.00
PHF Adj:	1.00	1.00	1.00	1.00	1.00	1.00	1.00	1.00	1.00	1.00	1.00	1.00
PHF Volume:	15	456	0	0	270	253	1414	0	291	0	0	0
Reduct Vol:	0	0	0	0	0	0	0	0	0	0	0	0
Reduced Vol:	15	456	0	0	270	253	1414	0	291	0	0	0
PCE Adj:	1.00	1.00	1.00	1.00	1.00	1.00	1.00	1.00	1.00	1.00	1.00	1.00
MLF Adj:	1.00	1.00	1.00	1.00	1.00	1.00	1.00	1.00	1.00	1.00	1.00	1.00
Final Vol.:	15	456	0	0	270	253	1414	0	291	0	0	0
Saturation Flow Module:												
Sat/Lane:	1900	1900	1900	1900	1900	1900	1900	1900	1900	1900	1900	1900
Adjustment:	0.95	0.95	1.00	1.00	0.88	0.88	0.92	1.00	0.85	1.00	1.00	1.00
Lanes:	1.00	2.00	0.00	0.00	1.03	0.97	2.00	0.00	1.00	0.00	0.00	0.00
Final Sat.:	1805	3610	0	0	1728	1619	3502	0	1615	0	0	0
Capacity Analysis Module:												
Vol/Sat:	0.01	0.13	0.00	0.00	0.16	0.16	0.40	0.00	0.18	0.00	0.00	0.00
Crit Moves:	****				****		****					
Green/Cycle:	0.18	0.45	0.00	0.00	0.27	0.27	0.55	0.00	0.55	0.00	0.00	0.00
Volume/Cap:	0.05	0.28	0.00	0.00	0.57	0.57	0.74	0.00	0.33	0.00	0.00	0.00
Uniform Del:	18.6	9.4	0.0	0.0	17.2	17.2	9.5	0.0	6.9	0.0	0.0	0.0
IncremntDel:	0.1	0.1	0.0	0.0	0.9	0.9	1.6	0.0	0.2	0.0	0.0	0.0
InitQueuDel:	0.0	0.0	0.0	0.0	0.0	0.0	0.0	0.0	0.0	0.0	0.0	0.0
Delay Adj:	1.00	1.00	0.00	0.00	1.00	1.00	1.00	0.00	1.00	0.00	0.00	0.00
Delay/Veh:	18.6	9.5	0.0	0.0	18.1	18.1	11.1	0.0	7.2	0.0	0.0	0.0
User DelAdj:	1.00	1.00	1.00	1.00	1.00	1.00	1.00	1.00	1.00	1.00	1.00	1.00
AdjDel/Veh:	18.6	9.5	0.0	0.0	18.1	18.1	11.1	0.0	7.2	0.0	0.0	0.0
HCM2kAvg:	0	3	0	0	5	5	11	0	3	0	0	0

Level Of Service Computation Report
2000 HCM Operations Method (Future Volume Alternative)

Intersection #5 CALIFORNIA CIRCLE/I-880 NB ON & OFF RAMPS

Cycle (sec): 0 Critical Vol./Cap. (X): 0.188
Loss Time (sec): 0 (Y+R = 4 sec) Average Delay (sec/veh): 9.4
Optimal Cycle:OPTIMIZED Level Of Service: A

Street Name:	CALIFORNIA CIRCLE						I-880 NB ON & OFF RAMPS					
Approach:	North Bound			South Bound			East Bound			West Bound		
Movement:	L - T - R			L - T - R			L - T - R			L - T - R		
Control:	Protected			Protected			Protected			Protected		
Rights:	Include			Include			Include			Include		
Min. Green:	10	15	0	0	15	0	30	0	30	0	0	0
Lanes:	1 0 2 0 0			0 0 1 1 0			2 0 0 0 1			0 0 0 0 0		
Volume Module: >> Count Date: 15 Nov 2006 << 4:00 TO 6:00 PM												
Base Vol:	34	204	0	0	141	71	334	0	174	0	0	0
Growth Adj:	1.00	1.00	1.00	1.00	1.00	1.00	1.00	1.00	1.00	1.00	1.00	1.00
Initial Bse:	34	204	0	0	141	71	334	0	174	0	0	0
Added Vol:	0	0	0	0	0	0	0	0	0	0	0	0
PasserByVol:	0	0	0	0	0	0	0	0	0	0	0	0
Initial Fut:	34	204	0	0	141	71	334	0	174	0	0	0
User Adj:	1.00	1.00	1.00	1.00	1.00	1.00	1.00	1.00	1.00	1.00	1.00	1.00
PHF Adj:	1.00	1.00	1.00	1.00	1.00	1.00	1.00	1.00	1.00	1.00	1.00	1.00
PHF Volume:	34	204	0	0	141	71	334	0	174	0	0	0
Reduct Vol:	0	0	0	0	0	0	0	0	0	0	0	0
Reduced Vol:	34	204	0	0	141	71	334	0	174	0	0	0
PCE Adj:	1.00	1.00	1.00	1.00	1.00	1.00	1.00	1.00	1.00	1.00	1.00	1.00
MLF Adj:	1.00	1.00	1.00	1.00	1.00	1.00	1.00	1.00	1.00	1.00	1.00	1.00
Final Vol.:	34	204	0	0	141	71	334	0	174	0	0	0
Saturation Flow Module:												
Sat/Lane:	1900	1900	1900	1900	1900	1900	1900	1900	1900	1900	1900	1900
Adjustment:	0.95	0.95	1.00	1.00	0.90	0.90	0.92	1.00	0.85	1.00	1.00	1.00
Lanes:	1.00	2.00	0.00	0.00	1.33	0.67	2.00	0.00	1.00	0.00	0.00	0.00
Final Sat.:	1805	3610	0	0	2281	1149	3502	0	1615	0	0	0
Capacity Analysis Module:												
Vol/Sat:	0.02	0.06	0.00	0.00	0.06	0.06	0.10	0.00	0.11	0.00	0.00	0.00
Crit Moves:	****				****				****			
Green/Cycle:	0.18	0.45	0.00	0.00	0.27	0.27	0.55	0.00	0.55	0.00	0.00	0.00
Volume/Cap:	0.10	0.12	0.00	0.00	0.23	0.23	0.17	0.00	0.20	0.00	0.00	0.00
Uniform Del:	18.8	8.7	0.0	0.0	15.5	15.5	6.3	0.0	6.4	0.0	0.0	0.0
IncremntDel:	0.1	0.0	0.0	0.0	0.1	0.1	0.0	0.0	0.1	0.0	0.0	0.0
InitQueuDel:	0.0	0.0	0.0	0.0	0.0	0.0	0.0	0.0	0.0	0.0	0.0	0.0
Delay Adj:	1.00	1.00	0.00	0.00	1.00	1.00	1.00	0.00	1.00	0.00	0.00	0.00
Delay/Veh:	18.9	8.7	0.0	0.0	15.6	15.6	6.3	0.0	6.5	0.0	0.0	0.0
User DelAdj:	1.00	1.00	1.00	1.00	1.00	1.00	1.00	1.00	1.00	1.00	1.00	1.00
AdjDel/Veh:	18.9	8.7	0.0	0.0	15.6	15.6	6.3	0.0	6.5	0.0	0.0	0.0
HCM2kAvg:	1	1	0	0	2	2	2	0	2	0	0	0

Level Of Service Computation Report
2000 HCM Operations Method (Future Volume Alternative)

Intersection #1 DIXON LANDING RD./CALIFORNIA CIRCLE

Cycle (sec): 105 Critical Vol./Cap. (X): 0.552
Loss Time (sec): 0 (Y+R = 4 sec) Average Delay (sec/veh): 25.6
Optimal Cycle: 85 Level Of Service: C

Street Name:	CALIFORNIA CIRCLE						DIXON LANDING RD.					
Approach:	North Bound			South Bound			East Bound			West Bound		
Movement:	L - T - R			L - T - R			L - T - R			L - T - R		
Control:	Split Phase			Split Phase			Protected			Protected		
Rights:	Include			Include			Include			Include		
Min. Green:	20	20	0	10	10	0	0	45	0	10	45	0
Lanes:	1 1 0	0 2		1 1 0	0 1		0 0 3	0 1		1 0 2	1 0	
Volume Module: >> Count Date: 30 Nov 2006 << 4:00 TO 6:00 PM												
Base Vol:	173	409	950	33	0	16	0	985	498	33	821	221
Growth Adj:	1.00	1.00	1.00	1.00	1.00	1.00	1.00	1.00	1.00	1.00	1.00	1.00
Initial Bse:	173	409	950	33	0	16	0	985	498	33	821	221
Added Vol:	0	0	0	0	0	0	0	0	0	0	0	0
PasserByVol:	0	0	0	0	0	0	0	0	0	0	0	0
Initial Fut:	173	409	950	33	0	16	0	985	498	33	821	221
User Adj:	1.00	1.00	1.00	1.00	1.00	1.00	1.00	1.00	1.00	1.00	1.00	1.00
PHF Adj:	1.00	1.00	1.00	1.00	1.00	1.00	1.00	1.00	1.00	1.00	1.00	1.00
PHF Volume:	173	409	950	33	0	16	0	985	498	33	821	221
Reduct Vol:	0	0	0	0	0	0	0	0	0	0	0	0
Reduced Vol:	173	409	950	33	0	16	0	985	498	33	821	221
PCE Adj:	1.00	1.00	1.00	1.00	1.00	1.00	1.00	1.00	1.00	1.00	1.00	1.00
MLF Adj:	1.00	1.00	1.00	1.00	1.00	1.00	1.00	1.00	1.00	1.00	1.00	1.00
Final Vol.:	173	409	950	33	0	16	0	985	498	33	821	221
Saturation Flow Module:												
Sat/Lane:	1900	1900	1900	1900	1900	1900	1900	1900	1900	1900	1900	1900
Adjustment:	0.99	0.99	0.75	0.95	1.00	0.85	1.00	0.91	0.85	0.95	0.88	0.88
Lanes:	1.00	1.00	2.00	2.00	0.00	1.00	0.00	3.00	1.00	1.00	2.36	0.64
Final Sat.:	1872	1872	2842	3618	0	1615	0	5187	1615	1805	3956	1065
Capacity Analysis Module:												
Vol/Sat:	0.09	0.22	0.33	0.01	0.00	0.01	0.00	0.19	0.31	0.02	0.21	0.21
Crit Moves:			****	****				****		****		
Green/Cycle:	0.38	0.38	0.38	0.10	0.00	0.10	0.00	0.43	0.43	0.10	0.52	0.52
Volume/Cap:	0.24	0.57	0.88	0.10	0.00	0.10	0.00	0.44	0.72	0.19	0.40	0.40
Uniform Del:	22.2	25.7	30.2	43.4	0.0	43.4	0.0	21.2	24.8	43.8	15.0	15.0
IncremntDel:	0.1	0.8	8.3	0.1	0.0	0.3	0.0	0.1	3.7	0.5	0.1	0.1
InitQueuDel:	0.0	0.0	0.0	0.0	0.0	0.0	0.0	0.0	0.0	0.0	0.0	0.0
Delay Adj:	1.00	1.00	1.00	1.00	0.00	1.00	0.00	1.00	1.00	1.00	1.00	1.00
Delay/Veh:	22.2	26.5	38.5	43.5	0.0	43.7	0.0	21.3	28.5	44.3	15.1	15.1
User DelAdj:	1.00	1.00	1.00	1.00	1.00	1.00	1.00	1.00	1.00	1.00	1.00	1.00
AdjDel/Veh:	22.2	26.5	38.5	43.5	0.0	43.7	0.0	21.3	28.5	44.3	15.1	15.1
HCM2kAvg:	4	11	17	1	0	1	0	8	14	1	7	7

Level Of Service Computation Report
2000 HCM Operations Method (Future Volume Alternative)

Intersection #2 DIXON LANDING RD./I-880 SB RAMP

Cycle (sec):	105	Critical Vol./Cap. (X):	0.321
Loss Time (sec):	0 (Y+R = 4 sec)	Average Delay (sec/veh):	6.9
Optimal Cycle:	35	Level Of Service:	A

Street Name:	I-880 SB RAMP						DIXON LANDING RD.					
Approach:	North Bound			South Bound			East Bound			West Bound		
Movement:	L - T - R			L - T - R			L - T - R			L - T - R		
Control:	Protected			Protected			Protected			Protected		
Rights:	Include			Include			Include			Include		
Min. Green:	0	0	0	10	0	10	0	25	0	0	25	0
Lanes:	0 0 0 0 0			2 0 0 0 2			0 0 2 1 0			0 0 2 0 3		
Volume Module: >> Count Date: 30 Nov 2006 << 4:00 TO 6:00 PM												
Base Vol:	0	0	0	254	0	32	0	1241	42	0	146	849
Growth Adj:	1.00	1.00	1.00	1.00	1.00	1.00	1.00	1.00	1.00	1.00	1.00	1.00
Initial Bse:	0	0	0	254	0	32	0	1241	42	0	146	849
Added Vol:	0	0	0	0	0	0	0	0	0	0	0	0
PasserByVol:	0	0	0	0	0	0	0	0	0	0	0	0
Initial Fut:	0	0	0	254	0	32	0	1241	42	0	146	849
User Adj:	1.00	1.00	1.00	1.00	1.00	1.00	1.00	1.00	1.00	1.00	1.00	1.00
PHF Adj:	1.00	1.00	1.00	1.00	1.00	1.00	1.00	1.00	1.00	1.00	1.00	1.00
PHF Volume:	0	0	0	254	0	32	0	1241	42	0	146	849
Reduct Vol:	0	0	0	0	0	0	0	0	0	0	0	0
Reduced Vol:	0	0	0	254	0	32	0	1241	42	0	146	849
PCE Adj:	1.00	1.00	1.00	1.00	1.00	1.00	1.00	1.00	1.00	1.00	1.00	1.00
MLF Adj:	1.00	1.00	1.00	1.00	1.00	1.00	1.00	1.00	1.00	1.00	1.00	1.00
Final Vol.:	0	0	0	254	0	32	0	1241	42	0	146	849
Saturation Flow Module:												
Sat/Lane:	1900	1900	1900	1900	1900	1900	1900	1900	1900	1900	1900	1900
Adjustment:	1.00	1.00	1.00	0.92	1.00	0.75	1.00	0.91	0.91	1.00	0.95	0.75
Lanes:	0.00	0.00	0.00	2.00	0.00	2.00	0.00	2.90	0.10	0.00	2.00	3.00
Final Sat.:	0	0	0	3502	0	2842	0	4992	169	0	3610	4264
Capacity Analysis Module:												
Vol/Sat:	0.00	0.00	0.00	0.07	0.00	0.01	0.00	0.25	0.25	0.00	0.04	0.20
Crit Moves:				****				****		****		
Green/Cycle:	0.00	0.00	0.00	0.23	0.00	0.23	0.00	0.77	0.77	0.00	0.77	0.77
Volume/Cap:	0.00	0.00	0.00	0.32	0.00	0.05	0.00	0.32	0.32	0.00	0.05	0.26
Uniform Del:	0.0	0.0	0.0	33.9	0.0	31.8	0.0	3.6	3.6	0.0	2.8	3.3
IncremntDel:	0.0	0.0	0.0	0.2	0.0	0.0	0.0	0.0	0.0	0.0	0.0	0.0
InitQueuDel:	0.0	0.0	0.0	0.0	0.0	0.0	0.0	0.0	0.0	0.0	0.0	0.0
Delay Adj:	0.00	0.00	0.00	1.00	0.00	1.00	0.00	1.00	1.00	0.00	1.00	1.00
Delay/Veh:	0.0	0.0	0.0	34.2	0.0	31.9	0.0	3.6	3.6	0.0	2.8	3.4
User DelAdj:	1.00	1.00	1.00	1.00	1.00	1.00	1.00	1.00	1.00	1.00	1.00	1.00
AdjDel/Veh:	0.0	0.0	0.0	34.2	0.0	31.9	0.0	3.6	3.6	0.0	2.8	3.4
HCM2kAvg:	0	0	0	4	0	0	0	4	4	0	1	3

Level Of Service Computation Report
2000 HCM Operations Method (Future Volume Alternative)

Intersection #3 DIXON LANDING RD./MILMONT DR.

Cycle (sec): 110 Critical Vol./Cap. (X): 0.779
Loss Time (sec): 0 (Y+R = 4 sec) Average Delay (sec/veh): 39.4
Optimal Cycle: 103 Level Of Service: D

Street Name:	MILMONT DR.						DIXON LANDING RD.					
Approach:	North Bound			South Bound			East Bound			West Bound		
Movement:	L - T - R			L - T - R			L - T - R			L - T - R		
Control:	Protected			Protected			Protected			Protected		
Rights:	Include			Include			Include			Include		
Min. Green:	10	20	0	10	20	0	10	30	0	10	30	0
Lanes:	1 0 1	0 1		1 0 1	0 1		1 0 1	1 0		2 0 1	1 0	
Volume Module: >> Count Date: 15 Nov 2006 << 4:00 TO 6:00 PM												
Base Vol:	55	350	138	43	37	435	580	929	138	181	519	45
Growth Adj:	1.00	1.00	1.00	1.00	1.00	1.00	1.00	1.00	1.00	1.00	1.00	1.00
Initial Bse:	55	350	138	43	37	435	580	929	138	181	519	45
Added Vol:	0	0	0	0	0	0	0	0	0	0	0	0
PasserByVol:	0	0	0	0	0	0	0	0	0	0	0	0
Initial Fut:	55	350	138	43	37	435	580	929	138	181	519	45
User Adj:	1.00	1.00	1.00	1.00	1.00	1.00	1.00	1.00	1.00	1.00	1.00	1.00
PHF Adj:	1.00	1.00	1.00	1.00	1.00	1.00	1.00	1.00	1.00	1.00	1.00	1.00
PHF Volume:	55	350	138	43	37	435	580	929	138	181	519	45
Reduct Vol:	0	0	0	0	0	0	0	0	0	0	0	0
Reduced Vol:	55	350	138	43	37	435	580	929	138	181	519	45
PCE Adj:	1.00	1.00	1.00	1.00	1.00	1.00	1.00	1.00	1.00	1.00	1.00	1.00
MLF Adj:	1.00	1.00	1.00	1.00	1.00	1.00	1.00	1.00	1.00	1.00	1.00	1.00
Final Vol.:	55	350	138	43	37	435	580	929	138	181	519	45
Saturation Flow Module:												
Sat/Lane:	1900	1900	1900	1900	1900	1900	1900	1900	1900	1900	1900	1900
Adjustment:	0.95	1.00	0.85	0.95	1.00	0.85	0.95	0.93	0.93	0.92	0.94	0.94
Lanes:	1.00	1.00	1.00	1.00	1.00	1.00	1.00	1.74	0.26	2.00	1.84	0.16
Final Sat.:	1805	1900	1615	1805	1900	1615	1805	3083	458	3502	3282	285
Capacity Analysis Module:												
Vol/Sat:	0.03	0.18	0.09	0.02	0.02	0.27	0.32	0.30	0.30	0.05	0.16	0.16
Crit Moves:	****					****	****				****	
Green/Cycle:	0.09	0.26	0.26	0.13	0.29	0.29	0.35	0.48	0.48	0.14	0.27	0.27
Volume/Cap:	0.34	0.72	0.33	0.19	0.07	0.93	0.93	0.63	0.63	0.36	0.58	0.58
Uniform Del:	46.9	37.4	33.4	43.0	28.3	37.9	34.6	21.7	21.7	42.6	34.6	34.6
IncremntDel:	1.2	5.3	0.5	0.4	0.1	24.8	20.3	0.8	0.8	0.4	0.9	0.9
InitQueuDel:	0.0	0.0	0.0	0.0	0.0	0.0	0.0	0.0	0.0	0.0	0.0	0.0
Delay Adj:	1.00	1.00	1.00	1.00	1.00	1.00	1.00	1.00	1.00	1.00	1.00	1.00
Delay/Veh:	48.1	42.7	33.8	43.5	28.3	62.8	54.9	22.5	22.5	43.0	35.4	35.4
User DelAdj:	1.00	1.00	1.00	1.00	1.00	1.00	1.00	1.00	1.00	1.00	1.00	1.00
AdjDel/Veh:	48.1	42.7	33.8	43.5	28.3	62.8	54.9	22.5	22.5	43.0	35.4	35.4
HCM2kAvg:	2	12	4	1	1	18	24	14	14	3	9	9

Level Of Service Computation Report
2000 HCM Operations Method (Future Volume Alternative)

Intersection #4 DIXON LANDING RD./MILPITAS BLVD.

Cycle (sec):	105	Critical Vol./Cap. (X):	0.879
Loss Time (sec):	0 (Y+R = 4 sec)	Average Delay (sec/veh):	42.1
Optimal Cycle:	180	Level Of Service:	D

Street Name:	MILPITAS BLVD.						DIXON LANDING RD.					
Approach:	North Bound			South Bound			East Bound			West Bound		
Movement:	L - T - R			L - T - R			L - T - R			L - T - R		
Control:	Protected			Protected			Split Phase			Split Phase		
Rights:	Include			Include			Include			Include		
Min. Green:	10	25	0	10	25	0	40	40	40	8	8	8
Lanes:	1 0	1 1	0	1 0	1 1	0	1 0	1 1	0	1 0	1 1	0
Volume Module: >> Count Date: 15 Nov 2006 << 4:00 TO 6:00 PM												
Base Vol:	394	856	75	189	396	263	613	326	358	88	161	209
Growth Adj:	1.00	1.00	1.00	1.00	1.00	1.00	1.00	1.00	1.00	1.00	1.00	1.00
Initial Bse:	394	856	75	189	396	263	613	326	358	88	161	209
Added Vol:	0	0	0	0	0	0	0	0	0	0	0	0
PasserByVol:	0	0	0	0	0	0	0	0	0	0	0	0
Initial Fut:	394	856	75	189	396	263	613	326	358	88	161	209
User Adj:	1.00	1.00	1.00	1.00	1.00	1.00	1.00	1.00	1.00	1.00	1.00	1.00
PHF Adj:	1.00	1.00	1.00	1.00	1.00	1.00	1.00	1.00	1.00	1.00	1.00	1.00
PHF Volume:	394	856	75	189	396	263	613	326	358	88	161	209
Reduct Vol:	0	0	0	0	0	0	0	0	0	0	0	0
Reduced Vol:	394	856	75	189	396	263	613	326	358	88	161	209
PCE Adj:	1.00	1.00	1.00	1.00	1.00	1.00	1.00	1.00	1.00	1.00	1.00	1.00
MLF Adj:	1.00	1.00	1.00	1.00	1.00	1.00	1.00	1.00	1.00	1.00	1.00	1.00
Final Vol.:	394	856	75	189	396	263	613	326	358	88	161	209
Saturation Flow Module:												
Sat/Lane:	1900	1900	1900	1900	1900	1900	1900	1900	1900	1900	1900	1900
Adjustment:	0.95	0.94	0.94	0.95	0.89	0.89	0.95	0.88	0.88	0.95	0.87	0.87
Lanes:	1.00	1.84	0.16	1.00	1.20	0.80	1.00	1.00	1.00	1.00	1.00	1.00
Final Sat.:	1805	3279	287	1805	2039	1354	1805	1664	1664	1805	1652	1652
Capacity Analysis Module:												
Vol/Sat:	0.22	0.26	0.26	0.10	0.19	0.19	0.34	0.20	0.22	0.05	0.10	0.13
Crit Moves:	****				****		****					****
Green/Cycle:	0.24	0.34	0.34	0.14	0.24	0.24	0.38	0.38	0.38	0.14	0.14	0.14
Volume/Cap:	0.91	0.76	0.76	0.76	0.82	0.82	0.89	0.51	0.56	0.35	0.70	0.91
Uniform Del:	38.7	30.8	30.8	43.7	37.8	37.8	30.5	25.0	25.6	40.8	43.0	44.5
IncremntDel:	22.1	2.9	2.9	13.1	6.4	6.4	13.8	0.3	0.6	0.8	4.1	23.1
InitQueuDel:	0.0	0.0	0.0	0.0	0.0	0.0	0.0	0.0	0.0	0.0	0.0	0.0
Delay Adj:	1.00	1.00	1.00	1.00	1.00	1.00	1.00	1.00	1.00	1.00	1.00	1.00
Delay/Veh:	60.7	33.7	33.7	56.8	44.3	44.3	44.3	25.4	26.3	41.7	47.1	67.6
User DelAdj:	1.00	1.00	1.00	1.00	1.00	1.00	1.00	1.00	1.00	1.00	1.00	1.00
AdjDel/Veh:	60.7	33.7	33.7	56.8	44.3	44.3	44.3	25.4	26.3	41.7	47.1	67.6
HCM2kAvg:	17	15	15	8	12	12	23	8	9	3	6	10

Level Of Service Computation Report
2000 HCM Operations Method (Future Volume Alternative)

Intersection #5 CALIFORNIA CIRCLE/I-880 NB ON & OFF RAMPS

Cycle (sec):	0	Critical Vol./Cap. (X):	0.562
Loss Time (sec):	0 (Y+R = 4 sec)	Average Delay (sec/veh):	11.8
Optimal Cycle:	55	Level Of Service:	B

Street Name:	CALIFORNIA CIRCLE						I-880 NB ON & OFF RAMPS					
Approach:	North Bound			South Bound			East Bound			West Bound		
Movement:	L - T - R			L - T - R			L - T - R			L - T - R		
Control:	Protected			Protected			Protected			Protected		
Rights:	Include			Include			Include			Include		
Min. Green:	10	15	0	0	15	0	30	0	30	0	0	0
Lanes:	1 0 2 0 0			0 0 1 1 0			2 0 0 0 1			0 0 0 0 0		
Volume Module: >> Count Date: 15 Nov 2006 << 4:00 TO 6:00 PM												
Base Vol:	1	470	0	0	276	253	1414	0	295	0	0	0
Growth Adj:	1.00	1.00	1.00	1.00	1.00	1.00	1.00	1.00	1.00	1.00	1.00	1.00
Initial Bse:	1	470	0	0	276	253	1414	0	295	0	0	0
Added Vol:	0	0	0	0	0	0	0	0	0	0	0	0
PasserByVol:	0	0	0	0	0	0	0	0	0	0	0	0
Initial Fut:	1	470	0	0	276	253	1414	0	295	0	0	0
User Adj:	1.00	1.00	1.00	1.00	1.00	1.00	1.00	1.00	1.00	1.00	1.00	1.00
PHF Adj:	1.00	1.00	1.00	1.00	1.00	1.00	1.00	1.00	1.00	1.00	1.00	1.00
PHF Volume:	1	470	0	0	276	253	1414	0	295	0	0	0
Reduct Vol:	0	0	0	0	0	0	0	0	0	0	0	0
Reduced Vol:	1	470	0	0	276	253	1414	0	295	0	0	0
PCE Adj:	1.00	1.00	1.00	1.00	1.00	1.00	1.00	1.00	1.00	1.00	1.00	1.00
MLF Adj:	1.00	1.00	1.00	1.00	1.00	1.00	1.00	1.00	1.00	1.00	1.00	1.00
Final Vol.:	1	470	0	0	276	253	1414	0	295	0	0	0
Saturation Flow Module:												
Sat/Lane:	1900	1900	1900	1900	1900	1900	1900	1900	1900	1900	1900	1900
Adjustment:	0.95	0.95	1.00	1.00	0.88	0.88	0.92	1.00	0.85	1.00	1.00	1.00
Lanes:	1.00	2.00	0.00	0.00	1.04	0.96	2.00	0.00	1.00	0.00	0.00	0.00
Final Sat.:	1805	3610	0	0	1748	1602	3502	0	1615	0	0	0
Capacity Analysis Module:												
Vol/Sat:	0.00	0.13	0.00	0.00	0.16	0.16	0.40	0.00	0.18	0.00	0.00	0.00
Crit Moves:	****				****		****					
Green/Cycle:	0.18	0.45	0.00	0.00	0.27	0.27	0.55	0.00	0.55	0.00	0.00	0.00
Volume/Cap:	0.00	0.29	0.00	0.00	0.58	0.58	0.74	0.00	0.33	0.00	0.00	0.00
Uniform Del:	18.4	9.4	0.0	0.0	17.3	17.3	9.5	0.0	7.0	0.0	0.0	0.0
IncremntDel:	0.0	0.1	0.0	0.0	0.9	0.9	1.6	0.0	0.2	0.0	0.0	0.0
InitQueuDel:	0.0	0.0	0.0	0.0	0.0	0.0	0.0	0.0	0.0	0.0	0.0	0.0
Delay Adj:	1.00	1.00	0.00	0.00	1.00	1.00	1.00	0.00	1.00	0.00	0.00	0.00
Delay/Veh:	18.4	9.5	0.0	0.0	18.2	18.2	11.1	0.0	7.2	0.0	0.0	0.0
User DelAdj:	1.00	1.00	1.00	1.00	1.00	1.00	1.00	1.00	1.00	1.00	1.00	1.00
AdjDel/Veh:	18.4	9.5	0.0	0.0	18.2	18.2	11.1	0.0	7.2	0.0	0.0	0.0
HCM2kAvg:	0	3	0	0	5	5	11	0	3	0	0	0

Level Of Service Computation Report
2000 HCM Operations Method (Future Volume Alternative)

Intersection #5 CALIFORNIA CIRCLE/I-880 NB ON & OFF RAMPS

Cycle (sec):	0	Critical Vol./Cap. (X):	0.380
Loss Time (sec):	0 (Y+R = 4 sec)	Average Delay (sec/veh):	11.2
Optimal Cycle:	55	Level Of Service:	B

Street Name:	CALIFORNIA CIRCLE						I-880 NB ON & OFF RAMPS					
Approach:	North Bound			South Bound			East Bound			West Bound		
Movement:	L - T - R			L - T - R			L - T - R			L - T - R		
Control:	Protected			Protected			Protected			Protected		
Rights:	Include			Include			Include			Include		
Min. Green:	10	15	0	0	15	0	30	0	30	0	0	0
Lanes:	1 0 2 0 0			0 0 1 1 0			2 0 0 0 1			0 0 0 0 0		
Volume Module: >> Count Date: 15 Nov 2006 << 4:00 TO 6:00 PM												
Base Vol:	96	348	0	0	399	71	334	0	312	0	0	0
Growth Adj:	1.00	1.00	1.00	1.00	1.00	1.00	1.00	1.00	1.00	1.00	1.00	1.00
Initial Bse:	96	348	0	0	399	71	334	0	312	0	0	0
Added Vol:	0	0	0	0	0	0	0	0	0	0	0	0
PasserByVol:	0	0	0	0	0	0	0	0	0	0	0	0
Initial Fut:	96	348	0	0	399	71	334	0	312	0	0	0
User Adj:	1.00	1.00	1.00	1.00	1.00	1.00	1.00	1.00	1.00	1.00	1.00	1.00
PHF Adj:	1.00	1.00	1.00	1.00	1.00	1.00	1.00	1.00	1.00	1.00	1.00	1.00
PHF Volume:	96	348	0	0	399	71	334	0	312	0	0	0
Reduct Vol:	0	0	0	0	0	0	0	0	0	0	0	0
Reduced Vol:	96	348	0	0	399	71	334	0	312	0	0	0
PCE Adj:	1.00	1.00	1.00	1.00	1.00	1.00	1.00	1.00	1.00	1.00	1.00	1.00
MLF Adj:	1.00	1.00	1.00	1.00	1.00	1.00	1.00	1.00	1.00	1.00	1.00	1.00
Final Vol.:	96	348	0	0	399	71	334	0	312	0	0	0
Saturation Flow Module:												
Sat/Lane:	1900	1900	1900	1900	1900	1900	1900	1900	1900	1900	1900	1900
Adjustment:	0.95	0.95	1.00	1.00	0.93	0.93	0.92	1.00	0.85	1.00	1.00	1.00
Lanes:	1.00	2.00	0.00	0.00	1.70	0.30	2.00	0.00	1.00	0.00	0.00	0.00
Final Sat.:	1805	3610	0	0	2994	533	3502	0	1615	0	0	0
Capacity Analysis Module:												
Vol/Sat:	0.05	0.10	0.00	0.00	0.13	0.13	0.10	0.00	0.19	0.00	0.00	0.00
Crit Moves:	****				****				****			
Green/Cycle:	0.18	0.45	0.00	0.00	0.27	0.27	0.55	0.00	0.55	0.00	0.00	0.00
Volume/Cap:	0.29	0.21	0.00	0.00	0.49	0.49	0.17	0.00	0.35	0.00	0.00	0.00
Uniform Del:	19.4	9.1	0.0	0.0	16.8	16.8	6.3	0.0	7.0	0.0	0.0	0.0
IncremntDel:	0.5	0.1	0.0	0.0	0.4	0.4	0.0	0.0	0.2	0.0	0.0	0.0
InitQueuDel:	0.0	0.0	0.0	0.0	0.0	0.0	0.0	0.0	0.0	0.0	0.0	0.0
Delay Adj:	1.00	1.00	0.00	0.00	1.00	1.00	1.00	0.00	1.00	0.00	0.00	0.00
Delay/Veh:	19.9	9.1	0.0	0.0	17.2	17.2	6.3	0.0	7.3	0.0	0.0	0.0
User DelAdj:	1.00	1.00	1.00	1.00	1.00	1.00	1.00	1.00	1.00	1.00	1.00	1.00
AdjDel/Veh:	19.9	9.1	0.0	0.0	17.2	17.2	6.3	0.0	7.3	0.0	0.0	0.0
HCM2kAvg:	2	2	0	0	4	4	2	0	3	0	0	0

Appendix C

PROPOSED DAILY PROJECT OPERATIONS PLAN

LIVING WORD CHRISTIAN CENTER
1494 CALIFORNIA CIRCLE
SUNDAY ACTIVITIES

RMS	USE	USER	SQ FT	FACTOR	COUNT	ADD	ACTUAL	08:30	09:30	10:30	11:30	12:30	1:30	02:30	3:30	4:30	5:30	6:30	7:30	8:30	9:30	10:30
OFFICE																						
1001	Open Office	Seminary	4263	100	42.6																	
1018	Office	Seminary	218	100	2.2																	
1035	Office	Seminary	233	100	2.3																	
1045	Office	Seminary	721	100	7.2																	
1047	Office	Seminary	994	100	9.9																	
1058	Office	Seminary	435	100	4.4				0	0	0	0	0	0	0	0	0	0	0	0	0	
1061	Office	Seminary	362	100	3.6				0	0	0	0	0	0	0	0	0	0	0	0	0	
1062	Office	Seminary	157	100	1.6				0	0	0	0	0	0	0	0	0	0	0	0	0	
1063	Office	Seminary	174	100	1.7				0	0	0	0	0	0	0	0	0	0	0	0	0	
1064	Office	Seminary	133	100	1.3				0	0	0	0	0	0	0	0	0	0	0	0	0	
1065	Office	Seminary	133	100	1.3				0	0	0	0	0	0	0	0	0	0	0	0	0	
1066	Office	Seminary	134	100	1.3				0	0	0	0	0	0	0	0	0	0	0	0	0	
1067	Office	Seminary	134	100	1.3				0	0	0	0	0	0	0	0	0	0	0	0	0	
1068	Office	Seminary	133	100	1.3				0	0	0	0	0	0	0	0	0	0	0	0	0	
1069	Office	Seminary	133	100	1.3				0	0	0	0	0	0	0	0	0	0	0	0	0	
1070	Office	Seminary	134	100	1.3				0	0	0	0	0	0	0	0	0	0	0	0	0	
1071	Office	Seminary	133	100	1.3				0	0	0	0	0	0	0	0	0	0	0	0	0	
1072	Office	Seminary	132	100	1.3				0	0	0	0	0	0	0	0	0	0	0	0	0	
1073	Office	Seminary	120	100	1.2																	
SEMINARY																						
27	Class	Adult	768	20	38.4	1.0	35.0			24.0			12.0									
28	Class	Adult	624	20	31.2	1.0	30.0			20.0			10.0									
29	Class	Adult	624	20	31.2	1.0	30.0			20.0			10.0									
1029	Class	Adult	465	20	23.3																	
1030	Class	Adult	829	20	41.5																	
1031	Class	Adult	733	20	36.7																	
1032	Class	Adult	859	20	43.0																	
1033	Class	Adult	740	20	37.0																	
1034	Class	Adult	425	20	21.3																	
1034a	Class	Adult	410	20	20.5																	
1074	Class	Adult	849	20	42.5	1.0	40.0			27.0			14.0									
1075	Class	Adult	849	20	42.5	1.0	40.0			27.0			14.0									
1076	Class	Adult	742	20	37.1	1.0	35.0			24.0			12.0									
1077	Class	Adult	955	20	47.8	1.0	45.0			30.0			15.0									
BIBLE STUDY																						
1003a	Class	Dreamland	584	20	29.2	1.0	10.0				10.0			10.0								
1003b	Class	Dreamland	647	20	32.4	1.0	10.0				10.0			10.0								
1005	Class	Dreamland	956	20	47.8	1.0	10.0				10.0			10.0								
1006	Class	Dreamland	661	20	33.1	1.0	10.0				10.0			10.0								
1007	Class	Dreamland	938	20	46.9	1.0	10.0				10.0			10.0								
1008	Class	Dreamland	530	20	26.5	1.0	10.0				10.0			10.0								
1008b	Class	Dreamland	461	20	23.1	1.0	10.0				10.0			10.0								
1010	Class	Team Kid	916	20	45.8	1.0	35.0				35.0			35.0								
1011	Class	Team Kid	855	20	42.8	1.0	35.0				35.0			35.0								
1012	Class	Sr/Jr. High	996	20	49.8	1.0	30.0				30.0			30.0								
1015	Class	Sr/Jr. High	485	20	24.3	1.0	20.0				20.0			20.0								
1016	Class	Sr/Jr. High	476	20	23.8	1.0	20.0				20.0			20.0								
1017	Class	Sr/Jr. High	486	20	24.3	1.0	20.0				20.0			20.0								
OTHER ROOMS																						
1000	Lobby						0.0															
1026	Kitchen	LWCC/LWBC	603	200	3.0		3.0			3.0	3.0	3.0	3.0									
1027	Cafeteria	LWCC/LWBC	4301	15	286.7		285.0				250.0	150.0										
1002	Class		387	20	19.4		0.0															
1057	Breakroom		527				0.0															
1060	Breakroom		382				0.0															
1059	Copy		125	350	0.4		0.0															
1009	Storage		122	300	0.4		0.0															
1021	Storage		81	300	0.3		0.0															
1060	Storage		125				0.0															
1162	Command		243	100	2.4		0.0															
ROOMS NOT BEING USED																						
900	Open Office		4107	100	41.1		0.0															
1003	Open Office		3491	100	34.9		0.0															
1120	Office		138	100	1.4		0.0															
1122	Office		95	100	1.0		0.0															
1124	Office		92	100	0.9		0.0															
1126	Office		97	100	1.0		0.0															
1128	Office		92	100	0.9		0.0															
1130	Office		95	100	1.0		0.0															
1132	Office		100	100	1.0		0.0															
1140	Office		109	100	1.1		0.0															
1142	Office		313	100	3.1		0.0															
1144	Office		180	100	1.8		0.0															
1150	Office		155	100	1.6		0.0															
1152	Office		93	100	0.9		0.0															
1154	Office		92	100	0.9		0.0															
1156	Office		97	100	1.0		0.0															
1158	Office		94	100	0.9		0.0															
1160	Office		83	100	0.8		0.0															
1494 OCCUPANTS								0.0	0.0	175.0	483.0	153.0	80.0	230.0	0.0	0.0	0.0	0.0	0.0	0.0	0.0	0.0
INDIVIDUAL ALLOCATION								0.0	0.0	11.0	16.0	3.0	10.0	13.0	0.0	0.0	0.0	0.0	0.0	0.0	0.0	0.0
NET OCCUPANTS								0.0	0.0	164.0	467.0	150.0	80.0	217.0	0.0	0.0	0.0	0.0	0.0	0.0	0.0	0.0
OCCUPANT PARKING (DIVIDED BY 5)								0.0	0.0	33.0	94.0	30.0	16.0	44.0	0.0	0.0	0.0	0.0	0.0	0.0	0.0	0.0
OCCUPANT PARKING + INDIVIDUAL ALLOCATION								0.0	0.0	44.0	110.0	33.0	26.0	57.0	0.0	0.0	0.0	0.0	0.0	0.0	0.0	0.0

LIVING WORD CHRISTIAN CENTER
1600 CALIFORNIA CIRCLE
SUNDAY ACTIVITIES

RMS	USE		SQ FT	FACTOR	COUNT	ADD	ACTUAL	08:30	09:30	10:30	11:30	12:30	1:30	02:30	3:30	4:30	5:30	6:30	7:30	8:30	9:30	10:30
OFFICE																						
B101	Office	LWCC/LWBC	154	100	1.5		1				1			1	1	1	1					
B104	Office	LWCC/LWBC	136	100	1.4		1				1			1	1	1	1					
B105	Office	LWCC/LWBC	133	100	1.3						0			0	0	0	0					
B106	Office	LWCC/LWBC	245	100	2.5		1				1			1	1	1	1					
B107	Office	LWCC/LWBC	249	100	2.5		1				1			1	1	1	1					
B108	Office	LWCC/LWBC	247	100	2.5		1				1			1	1	1	1					
B109	Open Office	LWCC/LWBC	2041	100	20.4						0			0	0	0	0					
B110	Office	LWCC/LWBC	138	100	1.4		1				1			1	1	1	1					
B111	Office	LWCC/LWBC	132	100	1.3		1				1			1	1	1	1					
B112	Office	LWCC/LWBC	132	100	1.3		1				1			1	1	1	1					
C105	Office	LWCC/LWBC	119	100	1.2						0			0	0	0	0					
C111	Office	LWCC/LWBC	283	100	2.8		1				1			1	1	1	1					
C122	Office	LWCC/LWBC	225	100	2.3		1				1			1	1	1	1					
CHOIR PRACTICE																						
A105	Class	LWCC/LWBC	716	20	35.8		35	35										20	20			
SANCTUARY																						
A102	Assembly	LWCC/LWBC	6965	7	995.0				900			750										
A103B	Youth Room	LWCC/LWBC	2050	7	292.9					200			175									
A103C	Adult Room	LWCC/LWBC	3043	7	434.7					300			250									
BIBLE STUDY																						
C102	Class	Adult	847	20	42.4	1.0				20.0			10.0									
C103	Class	Adult	454	20	22.7	1.0				10.0			10.0									
C103	Class	Adult	293	20	14.7	1.0				10.0			10.0									
C106	Class	Adult	867	20	43.4	1.0				27.0			14.0									
C108	Class	Adult	718	20	35.9	1.0				24.0			12.0									
C110	Class	Adult	287	20	14.4	1.0				10.0			10.0									
C113	Class	Adult	602	20	30.1	1.0				20.0			10.0									
C114	Class	Adult	650	20	32.5	1.0				20.0			10.0									
C116	Class	Adult	1088	20	54.4	1.0				34.0			17.0									
C117	Class	Adult	744	20	37.2	1.0				24.0			12.0									
C118	Class	Adult	762	20	38.1	1.0				24.0			12.0									
C124	Class	Adult	236	20	11.8	1.0				10.0			10.0									
C125	Class	Adult	202	20	10.1	1.0				10.0			10.0									
OTHER ROOMS																						
C100	Command		118	100	1.2		0.0															
C107	Conference		478	15	31.9		0.0															
B113	Locker Room		211	100	2.1		0.0															
A112	Breakroom		293				0.0															
B114	Breakroom		362				0.0															
C126	Warehouse		2922	1500	1.9		0.0															
1600 OCCUPANTS								35.0	900.0	743.0	10.0	750.0	572.0	10.0	10.0	10.0	30.0	20.0	0.0	0.0	0.0	0.0
INDIVIDUAL ALLOCATION								10.0	10.0	23.0	10.0	10.0	23.0	10.0	10.0	10.0	10.0	0.0	0.0	0.0	0.0	0.0
NET OCCUPANTS								25.0	890.0	720.0	0.0	740.0	549.0	0.0	0.0	0.0	20.0	20.0	0.0	0.0	0.0	0.0
OCCUPANT PARKING (DIVIDED BY 5)								5.0	178.0	144.0	0.0	148.0	110.0	0.0	0.0	0.0	4.0	4.0	0.0	0.0	0.0	0.0
OCCUPANT PARKING + INDIVIDUAL ALLOCATION								15.0	188.0	167.0	10.0	158.0	133.0	10.0	10.0	10.0	14.0	4.0	0.0	0.0	0.0	0.0
1494 CALIFORNIA CIRCLE								0.0	0.0	175.0	483.0	153.0	80.0	230.0	0.0	0.0	0.0	0.0	0.0	0.0	0.0	0.0
INDIVIDUAL ALLOCATION								0.0	0.0	11.0	16.0	3.0	10.0	13.0	0.0	0.0	0.0	0.0	0.0	0.0	0.0	0.0
NET OCCUPANTS								0.0	0.0	164.0	467.0	150.0	80.0	217.0	0.0	0.0	0.0	0.0	0.0	0.0	0.0	0.0
OCCUPANT PARKING (DIVIDED BY 5)								0.0	0.0	33.0	94.0	30.0	16.0	44.0	0.0	0.0	0.0	0.0	0.0	0.0	0.0	0.0
OCCUPANT PARKING + INDIVIDUAL ALLOCATION								0.0	0.0	44.0	110.0	33.0	26.0	57.0	0.0	0.0	0.0	0.0	0.0	0.0	0.0	0.0
TOTAL 1494 & 1600 OCCUPANTS								35.0	900.0	918.0	493.0	903.0	662.0	240.0	10.0	10.0	30.0	20.0	0.0	0.0	0.0	0.0
INDIVIDUAL ALLOCATION								10.0	10.0	34.0	26.0	13.0	33.0	23.0	10.0	10.0	10.0	0.0	0.0	0.0	0.0	0.0
NET OCCUPANTS								25.0	890.0	884.0	467.0	890.0	629.0	217.0	0.0	0.0	20.0	20.0	0.0	0.0	0.0	0.0
OCCUPANT PARKING (DIVIDED BY 5)								5.0	178.0	177.0	94.0	178.0	126.0	44.0	0.0	0.0	4.0	4.0	0.0	0.0	0.0	0.0
OCCUPANT PARKING + INDIVIDUAL ALLOCATION								15.0	188.0	211.0	120.0	191.0	159.0	67.0	10.0	10.0	14.0	4.0	0.0	0.0	0.0	0.0

LIVING WORD CHRISTIAN CENTER
1494 CALIFORNIA CIRCLE
MONDAY ACTIVITIES

RMS	USE	USER	SQ FT	FACTOR	COUNT	ADD	ACTUAL	08:30	09:30	10:30	11:30	12:30	1:30	02:30	3:30	4:30	5:30	6:30	7:30	8:30	9:30	10:30
OFFICE																						
1001	Open Office	Seminary	4263	100	42.6																	
1018	Office	Seminary	218	100	2.2																	
1035	Office	Seminary	233	100	2.3																	
1045	Office	Seminary	721	100	7.2																	
1047	Office	Seminary	994	100	9.9																	
1058	Office	Seminary	435	100	4.4		1		1	1	1	1	1	1	1	1						
1061	Office	Seminary	362	100	3.6				0	0	0	0	0	0	0	0						
1062	Office	Seminary	157	100	1.6		1		1	1	1	1	1	1	1	1						
1063	Office	Seminary	174	100	1.7				0	0	0	0	0	0	0	0						
1064	Office	Seminary	133	100	1.3		1		1	1	1	1	1	1	1	1						
1065	Office	Seminary	133	100	1.3				0	0	0	0	0	0	0	0						
1066	Office	Seminary	134	100	1.3		1		1	1	1	1	1	1	1	1						
1067	Office	Seminary	134	100	1.3				0	0	0	0	0	0	0	0						
1068	Office	Seminary	133	100	1.3		1		1	1	1	1	1	1	1	1						
1069	Office	Seminary	133	100	1.3				0	0	0	0	0	0	0	0						
1070	Office	Seminary	134	100	1.3		1		1	1	1	1	1	1	1	1						
1071	Office	Seminary	133	100	1.3				0	0	0	0	0	0	0	0						
1072	Office	Seminary	132	100	1.3		1		1	1	1	1	1	1	1	1						
1073	Office	Seminary	120	100	1.2																	
SEMINARY																						
27	Class	Seminary	768	20	38.4	1.0	20			20.0	20.0	20.0	20.0	20.0	20.0			20.0	20.0	20.0		
28	Class	Seminary	624	20	31.2	1.0	20			20.0	20.0	20.0	20.0	20.0	20.0			20.0	20.0	20.0		
29	Class	Seminary	624	20	31.2	1.0	20			20.0	20.0	20.0	20.0	20.0	20.0			20.0	20.0	20.0		
1029	Class	Seminary	465	20	23.3	1.0	20				20.0	20.0	20.0	20.0	20.0			20.0	20.0	20.0		
1030	Class	Seminary	829	20	41.5	1.0	20					20.0	20.0	20.0				20.0	20.0	20.0		
1031	Class	Seminary	733	20	36.7	1.0	20						20.0	20.0	20.0			20.0	20.0	20.0		
1032	Class	Seminary	859	20	43.0	1.0	20			20.0	20.0	20.0			20.0			20.0	20.0	20.0		
1033	Class	Seminary	740	20	37.0	1.0	20				20.0	20.0						20.0	20.0	20.0		
1034	Class	Seminary	425	20	21.3	1.0	20				20.0	20.0						20.0	20.0	20.0		
1034a	Class	Seminary	410	20	20.5	1.0	20					20.0	20.0	20.0	20.0			20.0	20.0	20.0		
1074	Class	Seminary	849	20	42.5	1.0	20						20.0	20.0	20.0			20.0	20.0	20.0		
1075	Class	Seminary	849	20	42.5	1.0	20						20.0	20.0	20.0			20.0	20.0	20.0		
1076	Class	Seminary	742	20	37.1	1.0	20						20.0	20.0	20.0			20.0	20.0	20.0		
1077	Class	Seminary	955	20	47.8	1.0	20															
BIBLE STUDY																						
1003a	Class	Dreamland	584	20	29.2																	
1003b	Class	Dreamland	647	20	32.4																	
1005	Class	Dreamland	956	20	47.8																	
1006	Class	Dreamland	661	20	33.1																	
1007	Class	Dreamland	938	20	46.9																	
1008	Class	Dreamland	530	20	26.5																	
1008b	Class	Dreamland	461	20	23.1																	
1010	Class	Team Kid	916	20	45.8																	
1011	Class	Team Kid	855	20	42.8								20.0	20.0	20.0			20.0	20.0	20.0		
1012	Class	Seminary	996	20	49.8	1.0	20.0						20.0	20.0	20.0			20.0	20.0	20.0		
1015	Class	Seminary	485	20	24.3	1.0	20.0						20.0	20.0	20.0			20.0	20.0	20.0		
1016	Class	Seminary	476	20	23.8	1.0	20.0						20.0	20.0	20.0			20.0	20.0	20.0		
1017	Class	Seminary	486	20	24.3	1.0	20.0															
OTHER ROOMS																						
1000	Lobby						0.0															
1026	Kitchen	Seminary	603	200	3.0		2.0				2.0	2.0	2.0	2.0								
1027	Multipurpose	Seminary	4301	15	286.7		50.0					50.0	50.0	50.0								
1002	Class		387	20	19.4		0.0															
1057	Breakroom		527				0.0															
1080	Breakroom		382				0.0															
1059	Copy		125	350	0.4		0.0															
1009	Storage		122	300	0.4		0.0															
1021	Storage		81	300	0.3		0.0															
1060	Storage		125				0.0															
1062	Command		243	100	2.4		0.0															
ROOMS NOT BEING USED																						
900	Open Office		4107	100	41.1		0.0															
1003	Open Office		3491	100	34.9		0.0															
1120	Office		138	100	1.4		0.0															
1122	Office		95	100	1.0		0.0															
1124	Office		92	100	0.9		0.0															
1126	Office		97	100	1.0		0.0															
1128	Office		92	100	0.9		0.0															
1130	Office		95	100	1.0		0.0															
1132	Office		100	100	1.0		0.0															
1140	Office		109	100	1.1		0.0															
1142	Office		312	100	3.1		0.0															
1144	Office		180	100	1.8		0.0															
1150	Office		155	100	1.6		0.0															
1152	Office		93	100	0.9		0.0															
1154	Office		97	100	0.9		0.0															
1156	Office		97	100	1.0		0.0															
1158	Office		94	100	0.9		0.0															
1160	Office		83	100	0.8		0.0															
1494 OCCUPANTS								0.0	7.0	87.0	149.0	239.0	359.0	360.0	327.0	7.0	0.0	360.0	360.0	360.0	0.0	0.0
INDIVIDUAL ALLOCATION								0.0	7.0	11.0	16.0	18.0	16.0	25.0	23.0	7.0	0.0	18.0	18.0	18.0	0.0	0.0
NET OCCUPANTS								0.0	0.0	76.0	133.0	221.0	343.0	335.0	304.0	0.0	0.0	342.0	342.0	342.0	0.0	0.0
OCCUPANT PARKING (SEMINARY INDIVIDUAL PARKING)								0.0	0.0	76.0	133.0	221.0	343.0	335.0	304.0	0.0	0.0	342.0	342.0	342.0	0.0	0.0
OCCUPANT PARKING + INDIVIDUAL ALLOCATION								0.0	7.0	87.0	149.0	239.0	359.0	360.0	327.0	7.0	0.0	360.0	360.0	360.0	0.0	0.0

LIVING WORD CHRISTIAN CENTER
1600 CALIFORNIA CIRCLE
MONDAY ACTIVITIES

RMS	USE		SQ FT	FACTOR	COUNT	ADD	ACTUAL	08:30	09:30	10:30	11:30	12:30	1:30	02:30	3:30	4:30	5:30	6:30	7:30	8:30	9:30	10:30
OFFICE																						
B101	Office	LWCC/LWBC	154	100	1.5																	
B104	Office	LWCC/LWBC	136	100	1.4																	
B105	Office	LWCC/LWBC	133	100	1.3																	
B106	Office	LWCC/LWBC	245	100	2.5																	
B107	Office	LWCC/LWBC	249	100	2.5																	
B108	Office	LWCC/LWBC	247	100	2.5																	
B109	Open Office	LWCC/LWBC	2041	100	20.4																	
B110	Office	LWCC/LWBC	135	100	1.4																	
B111	Office	LWCC/LWBC	132	100	1.3																	
B112	Office	LWCC/LWBC	132	100	1.3																	
C105	Office	LWCC/LWBC	119	100	1.2																	
C131	Office	LWCC/LWBC	283	100	2.8																	
C132	Office	LWCC/LWBC	225	100	2.3																	
CHOIR PRACTICE																						
A105	Class	LWCC/LWBC	716	20	35.8																	
SANCTUARY																						
A102	Assembly	LWCC/LWBC	6965	7	995.0																	
A103B	Youth Room	LWCC/LWBC	2050	7	292.9																	
A103C	Adult Room	LWCC/LWBC	3043	7	434.7																	
BIBLE STUDY																						
C102	Class	Adult	847	20	42.4	1.0																
C103	Class	Adult	454	20	22.7	1.0																
C103	Class	Adult	293	20	14.7	1.0																
C106	Class	Adult	867	20	43.4	1.0																
C108	Class	Adult	718	20	35.9	1.0																
C110	Class	Adult	287	20	14.4	1.0																
C113	Class	Adult	602	20	30.1	1.0																
C114	Class	Adult	650	20	32.5	1.0																
C116	Class	Adult	1088	20	54.4	1.0																
C117	Class	Adult	744	20	37.2	1.0																
C118	Class	Adult	762	20	38.1	1.0																
C124	Class	Adult	236	20	11.8	1.0																
C125	Class	Adult	202	20	10.1	1.0																
OTHER ROOMS																						
C100	Command		118	100	1.2		0.0															
C107	Conference		478	15	31.9		0.0															
B113	Locker Room		211	100	2.1		0.0															
A112	Breakroom		293				0.0															
B114	Breakroom		362				0.0															
C126	Warehouse		2922	1500	1.9		0.0															
1600 OCCUPANTS								0.0	0.0	0.0	0.0	0.0	0.0	0.0	0.0	0.0	0.0	0.0	0.0	0.0	0.0	0.0
INDIVIDUAL ALLOCATION								0.0	0.0	0.0	0.0	0.0	0.0	0.0	0.0	0.0	0.0	0.0	0.0	0.0	0.0	0.0
NET OCCUPANTS								0.0	0.0	0.0	0.0	0.0	0.0	0.0	0.0	0.0	0.0	0.0	0.0	0.0	0.0	0.0
OCCUPANT PARKING (DIVIDED BY 5)								0.0	0.0	0.0	0.0	0.0	0.0	0.0	0.0	0.0	0.0	0.0	0.0	0.0	0.0	0.0
OCCUPANT PARKING + INDIVIDUAL ALLOCATION								0.0	0.0	0.0	0.0	0.0	0.0	0.0	0.0	0.0	0.0	0.0	0.0	0.0	0.0	0.0
1494 CALIFORNIA CIRCLE								0.0	7.0	87.0	149.0	239.0	359.0	360.0	327.0	7.0	0.0	360.0	360.0	360.0	0.0	0.0
INDIVIDUAL ALLOCATION								0.0	7.0	11.0	16.0	18.0	16.0	25.0	23.0	7.0	0.0	18.0	18.0	18.0	0.0	0.0
NET OCCUPANTS								0.0	0.0	76.0	133.0	221.0	343.0	335.0	304.0	0.0	0.0	342.0	342.0	342.0	0.0	0.0
OCCUPANT PARKING (SEMINARY INDIVIDUAL PARKING)								0.0	0.0	76.0	133.0	221.0	343.0	335.0	304.0	0.0	0.0	342.0	342.0	342.0	0.0	0.0
OCCUPANT PARKING + INDIVIDUAL ALLOCATION								0.0	7.0	87.0	149.0	239.0	359.0	360.0	327.0	7.0	0.0	360.0	360.0	360.0	0.0	0.0
TOTAL 1494 & 1600 OCCUPANTS								0.0	7.0	87.0	149.0	239.0	359.0	360.0	327.0	7.0	0.0	360.0	360.0	360.0	0.0	0.0
INDIVIDUAL ALLOCATION								0.0	7.0	11.0	16.0	18.0	16.0	25.0	23.0	7.0	0.0	18.0	18.0	18.0	0.0	0.0
NET OCCUPANTS								0.0	0.0	76.0	133.0	221.0	343.0	335.0	304.0	0.0	0.0	342.0	342.0	342.0	0.0	0.0
OCCUPANT PARKING (COMBINED ABOVE)								0.0	0.0	76.0	133.0	221.0	343.0	335.0	304.0	0.0	0.0	342.0	342.0	342.0	0.0	0.0
OCCUPANT PARKING + INDIVIDUAL ALLOCATION								0.0	7.0	87.0	149.0	239.0	359.0	360.0	327.0	7.0	0.0	360.0	360.0	360.0	0.0	0.0

LIVING WORD CHRISTIAN CENTER
1494 CALIFORNIA CIRCLE
TUESDAY ACTIVITIES

RMS	USE	USER	SQ FT	FACTOR	COUNT	ADD	ACTUAL	08:30	09:30	10:30	11:30	12:30	1:30	02:30	3:30	4:30	5:30	6:30	7:30	8:30	9:30	10:30
OFFICE																						
1001	Open Office	Seminary	4263	100	42.6																	
1018	Office	Seminary	218	100	2.2																	
1035	Office	Seminary	233	100	2.3																	
1045	Office	Seminary	721	100	7.2																	
1047	Office	Seminary	994	100	9.9																	
1058	Office	Seminary	435	100	4.4		1		1	1	1	1	1	1	1	1						
1061	Office	Seminary	362	100	3.6				0	0	0	0	0	0	0	0						
1062	Office	Seminary	157	100	1.6		1		1	1	1	1	1	1	1	1						
1063	Office	Seminary	174	100	1.7				0	0	0	0	0	0	0	0						
1064	Office	Seminary	133	100	1.3		1		1	1	1	1	1	1	1	1						
1065	Office	Seminary	133	100	1.3				0	0	0	0	0	0	0	0						
1066	Office	Seminary	134	100	1.3		1		1	1	1	1	1	1	1	1						
1067	Office	Seminary	134	100	1.3				0	0	0	0	0	0	0	0						
1068	Office	Seminary	133	100	1.3		1		1	1	1	1	1	1	1	1						
1069	Office	Seminary	133	100	1.3				0	0	0	0	0	0	0	0						
1070	Office	Seminary	134	100	1.3		1		1	1	1	1	1	1	1	1						
1071	Office	Seminary	133	100	1.3				0	0	0	0	0	0	0	0						
1072	Office	Seminary	132	100	1.3		1		1	1	1	1	1	1	1	1						
1073	Office	Seminary	120	100	1.2																	
SEMINARY																						
27	Class	Seminary	768	20	38.4	1.0	20			20.0	20.0	20.0	20.0	20.0	20.0			20.0	20.0	20.0		
28	Class	Seminary	624	20	31.2	1.0	20			20.0	20.0	20.0	20.0	20.0	20.0			20.0	20.0	20.0		
29	Class	Seminary	624	20	31.2	1.0	20			20.0	20.0	20.0	20.0	20.0	20.0			20.0	20.0	20.0		
1029	Class	Seminary	465	20	23.3	1.0	20				20.0	20.0	20.0	20.0	20.0			20.0	20.0	20.0		
1030	Class	Seminary	829	20	41.5	1.0	20					20.0	20.0	20.0				20.0	20.0	20.0		
1031	Class	Seminary	733	20	36.7	1.0	20						20.0	20.0	20.0			20.0	20.0	20.0		
1032	Class	Seminary	860	20	43.0	1.0	20			20.0	20.0	20.0			20.0			20.0	20.0	20.0		
1033	Class	Seminary	740	20	37.0	1.0	20				20.0	20.0						20.0	20.0	20.0		
1034	Class	Seminary	425	20	21.3	1.0	20				20.0	20.0						20.0	20.0	20.0		
1034a	Class	Seminary	410	20	20.5	1.0	20						20.0	20.0	20.0			20.0	20.0	20.0		
1074	Class	Seminary	849	20	42.5	1.0	20						20.0	20.0	20.0			20.0	20.0	20.0		
1075	Class	Seminary	849	20	42.5	1.0	20						20.0	20.0	20.0			20.0	20.0	20.0		
1076	Class	Seminary	742	20	37.1	1.0	20						20.0	20.0	20.0			20.0	20.0	20.0		
1077	Class	Seminary	955	20	47.8	1.0	20															
BIBLE STUDY																						
1003a	Class	Dreamland	584	20	29.2																	
1003b	Class	Dreamland	647	20	32.4																	
1005	Class	Dreamland	956	20	47.8																	
1006	Class	Dreamland	661	20	33.1																	
1007	Class	Dreamland	938	20	46.9																	
1008	Class	Dreamland	530	20	26.5																	
1008b	Class	Dreamland	461	20	23.1																	
1010	Class	Team Kid	916	20	45.8																	
1011	Class	Team Kid	855	20	42.8																	
1012	Class	Seminary	996	20	49.8	1.0	20.0						20.0	20.0	20.0			20.0	20.0	20.0		
1015	Class	Seminary	485	20	24.3	1.0	20.0						20.0	20.0	20.0			20.0	20.0	20.0		
1016	Class	Seminary	476	20	23.8	1.0	20.0						20.0	20.0	20.0			20.0	20.0	20.0		
1017	Class	Seminary	486	20	24.3	1.0	20.0															
OTHER ROOMS																						
1000	Lobby						0.0															
1026	Kitchen	Seminary	603	200	3.0		2.0				2.0	2.0	2.0	3.0								
1027	Multipurpose	Seminary	4301	15	286.7		50.0					50.0	50.0	50.0								
1002	Class		387	20	19.4		0.0															
1057	Breakroom		527				0.0															
1080	Breakroom		382				0.0															
1059	Copy		125	350	0.4		0.0															
1009	Storage		122	300	0.4		0.0															
1021	Storage		81	300	0.3		0.0															
1060	Storage		125				0.0															
1162	Command		243	100	2.4		0.0															
ROOMS NOT BEING USED																						
900	Open Office		4107	100	41.1		0.0															
1003	Open Office		3491	100	34.9		0.0															
1120	Office		138	100	1.4		0.0															
1122	Office		95	100	1.0		0.0															
1124	Office		92	100	0.9		0.0															
1126	Office		97	100	1.0		0.0															
1128	Office		92	100	0.9		0.0															
1130	Office		95	100	1.0		0.0															
1132	Office		100	100	1.0		0.0															
1140	Office		109	100	1.1		0.0															
1142	Office		311	100	3.1		0.0															
1144	Office		180	100	1.8		0.0															
1150	Office		155	100	1.6		0.0															
1152	Office		93	100	0.9		0.0															
1154	Office		92	100	0.9		0.0															
1156	Office		97	100	1.0		0.0															
1158	Office		94	100	0.9		0.0															
1160	Office		83	100	0.8		0.0															
1494 OCCUPANTS								0.0	7.0	87.0	149.0	239.0	359.0	360.0	327.0	7.0	0.0	360.0	360.0	360.0	0.0	0.0
INDIVIDUAL ALLOCATION								0.0	7.0	11.0	16.0	18.0	16.0	25.0	23.0	7.0	0.0	18.0	18.0	18.0	0.0	0.0
NET OCCUPANTS								0.0	0.0	76.0	133.0	221.0	343.0	335.0	304.0	0.0	0.0	342.0	342.0	342.0	0.0	0.0
OCCUPANT PARKING (SEMINARY INDIVIDUAL PARKING)								0.0	0.0	76.0	133.0	221.0	343.0	335.0	304.0	0.0	0.0	342.0	342.0	342.0	0.0	0.0
OCCUPANT PARKING + INDIVIDUAL ALLOCATION								0.0	7.0	87.0	149.0	239.0	359.0	360.0	327.0	7.0	0.0	360.0	360.0	360.0	0.0	0.0

LIVING WORD CHRISTIAN CENTER
1600 CALIFORNIA CIRCLE
TUESDAY ACTIVITIES

RMS	USE		SQ FT	FACTOR	COUNT	ADD	ACTUAL	08:30	09:30	10:30	11:30	12:30	1:30	02:30	3:30	4:30	5:30	6:30	7:30	8:30	9:30	10:30
OFFICE																						
B101	Office	LWCC/LWBC	154	100	1.5		1		1	1	1	1	1	1	1	1						
B104	Office	LWCC/LWBC	136	100	1.4				0	0	0	0	0	0	0	0						
B105	Office	LWCC/LWBC	133	100	1.3		1		1	1	1	1	1	1	1	1						
B106	Office	LWCC/LWBC	245	100	2.5		1		1	1	1	1	1	1	1	1						
B107	Office	LWCC/LWBC	249	100	2.5		1		1	1	1	1	1	1	1	1						
B108	Office	LWCC/LWBC	247	100	2.5		1		1	1	1	1	1	1	1	1						
B109	Open Office	LWCC/LWBC	2041	100	20.4				0	0	0	0	0	0	0	0						
B110	Office	LWCC/LWBC	138	100	1.4		1		1	1	1	1	1	1	1	1						
B111	Office	LWCC/LWBC	132	100	1.3				0	0	0	0	0	0	0	0						
B112	Office	LWCC/LWBC	132	100	1.3		1		1	1	1	1	1	1	1	1						
C105	Office	LWCC/LWBC	119	100	1.2		1		1	1	1	1	1	1	1	1						
C111	Office	LWCC/LWBC	283	100	2.8		1		1	1	1	1	1	1	1	1						
C122	Office	LWCC/LWBC	225	100	2.3		1		1	1	1	1	1	1	1	1						
CHOIR PRACTICE																						
A105	Class	LWCC/LWBC	716	20	35.8																	
SANCTUARY																						
A102	Assembly	LWCC/LWBC	6965	7	995.0																	
A103B	Youth Room	LWCC/LWBC	2050	7	292.9																	
A103C	Adult Room	LWCC/LWBC	3043	7	434.7																	
BIBLE STUDY																						
C102	Class	Adult	847	20	42.4	1.0	20		20.0	20.0												
C103	Class	Adult	454	20	22.7	1.0																
C104	Class	Adult	293	20	14.7	1.0																
C106	Class	Adult	867	20	43.4	1.0																
C108	Class	Adult	718	20	35.9	1.0																
C110	Class	Adult	287	20	14.4	1.0																
C113	Class	Adult	602	20	30.1	1.0																
C114	Class	Adult	650	20	32.5	1.0																
C116	Class	Adult	1088	20	54.4	1.0																
C117	Class	Adult	744	20	37.2	1.0																
C118	Class	Adult	762	20	38.1	1.0																
C124	Class	Adult	236	20	11.8	1.0																
C125	Class	Adult	202	20	10.1	1.0																
OTHER ROOMS																						
C100	Command		118	100	1.2		0.0															
C107	Conference		478	15	31.9		0.0															
B113	Locker Room		211	100	2.1		0.0															
A112	Breakroom		293				0.0															
B114	Breakroom		362				0.0															
C126	Warehouse		2922	1500	1.9		0.0															
1600 OCCUPANTS								0.0	30.0	30.0	10.0	10.0	10.0	10.0	10.0	10.0	0.0	0.0	0.0	0.0	0.0	0.0
INDIVIDUAL ALLOCATION								0.0	10.0	10.0	10.0	10.0	10.0	10.0	10.0	10.0	0.0	0.0	0.0	0.0	0.0	0.0
NET OCCUPANTS								0.0	20.0	20.0	0.0	0.0	0.0	0.0	0.0	0.0	0.0	0.0	0.0	0.0	0.0	0.0
OCCUPANT PARKING (DIVIDED BY 5)								0.0	4.0	4.0	0.0	0.0	0.0	0.0	0.0	0.0	0.0	0.0	0.0	0.0	0.0	0.0
OCCUPANT PARKING + INDIVIDUAL ALLOCATION								0.0	14.0	14.0	10.0	10.0	10.0	10.0	10.0	10.0	0.0	0.0	0.0	0.0	0.0	0.0
1494 CALIFORNIA CIRCLE								0.0	7.0	87.0	149.0	239.0	359.0	360.0	327.0	7.0	0.0	360.0	360.0	360.0	0.0	0.0
INDIVIDUAL ALLOCATION								0.0	7.0	11.0	16.0	18.0	16.0	25.0	23.0	7.0	0.0	18.0	18.0	18.0	0.0	0.0
NET OCCUPANTS								0.0	0.0	76.0	133.0	221.0	343.0	335.0	304.0	0.0	0.0	342.0	342.0	342.0	0.0	0.0
OCCUPANT PARKING (SEMINARY INDIVIDUAL PARKING)								0.0	0.0	76.0	133.0	221.0	343.0	335.0	304.0	0.0	0.0	342.0	342.0	342.0	0.0	0.0
OCCUPANT PARKING + INDIVIDUAL ALLOCATION								0.0	7.0	87.0	149.0	239.0	359.0	360.0	327.0	7.0	0.0	360.0	360.0	360.0	0.0	0.0
TOTAL 1494 & 1600 OCCUPANTS								0.0	37.0	117.0	159.0	249.0	369.0	370.0	337.0	17.0	0.0	360.0	360.0	360.0	0.0	0.0
INDIVIDUAL ALLOCATION								0.0	17.0	21.0	26.0	28.0	26.0	35.0	33.0	17.0	0.0	18.0	18.0	18.0	0.0	0.0
NET OCCUPANTS								0.0	20.0	96.0	133.0	221.0	343.0	335.0	304.0	0.0	0.0	342.0	342.0	342.0	0.0	0.0
OCCUPANT PARKING (COMBINED ABOVE)								0.0	4.0	80.0	133.0	221.0	343.0	335.0	304.0	0.0	0.0	342.0	342.0	342.0	0.0	0.0
OCCUPANT PARKING + INDIVIDUAL ALLOCATION								0.0	21.0	101.0	159.0	249.0	369.0	370.0	337.0	17.0	0.0	360.0	360.0	360.0	0.0	0.0

LIVING WORD CHRISTIAN CENTER
1494 CALIFORNIA CIRCLE
WEDNESDAY ACTIVITIES

RMS	USE	USER	SQ FT	FACTOR	COUNT	ADD	ACTUAL	08:30	09:30	10:30	11:30	12:30	1:30	02:30	3:30	4:30	5:30	6:30	7:30	8:30	9:30	10:30
OFFICE																						
1001	Open Office	Seminary	4263	100	42.6																	
1018	Office	Seminary	218	100	2.2																	
1035	Office	Seminary	233	100	2.3																	
1045	Office	Seminary	721	100	7.2																	
1047	Office	Seminary	994	100	9.9																	
1058	Office	Seminary	435	100	4.4		1		1	1	1	1	1	1	1	1						
1061	Office	Seminary	362	100	3.6				0	0	0	0	0	0	0	0						
1062	Office	Seminary	157	100	1.6		1		1	1	1	1	1	1	1	1						
1063	Office	Seminary	174	100	1.7				0	0	0	0	0	0	0	0						
1064	Office	Seminary	133	100	1.3		1		1	1	1	1	1	1	1	1						
1065	Office	Seminary	133	100	1.3				0	0	0	0	0	0	0	0						
1066	Office	Seminary	134	100	1.3		1		1	1	1	1	1	1	1	1						
1067	Office	Seminary	134	100	1.3				0	0	0	0	0	0	0	0						
1068	Office	Seminary	133	100	1.3		1		1	1	1	1	1	1	1	1						
1069	Office	Seminary	133	100	1.3				0	0	0	0	0	0	0	0						
1070	Office	Seminary	134	100	1.3		1		1	1	1	1	1	1	1	1						
1071	Office	Seminary	133	100	1.3				0	0	0	0	0	0	0	0						
1072	Office	Seminary	132	100	1.3		1		1	1	1	1	1	1	1	1						
1073	Office	Seminary	120	100	1.2																	
SEMINARY																						
27	Class	Seminary	768	20	38.4	1.0	20			20.0	20.0	20.0	20.0	20.0	20.0			20.0	20.0	20.0		
28	Class	Seminary	624	20	31.2	1.0	20			20.0	20.0	20.0	20.0	20.0	20.0			20.0	20.0	20.0		
29	Class	Seminary	624	20	31.2	1.0	20			20.0	20.0	20.0	20.0	20.0	20.0			20.0	20.0	20.0		
1029	Class	Seminary	465	20	23.3	1.0	20				20.0	20.0	20.0	20.0	20.0			20.0	20.0	20.0		
1030	Class	Seminary	829	20	41.5	1.0	20					20.0	20.0	20.0				20.0	20.0	20.0		
1031	Class	Seminary	733	20	36.7	1.0	20						20.0	20.0	20.0			20.0	20.0	20.0		
1032	Class	Seminary	859	20	42.9	1.0	20			20.0	20.0	20.0			20.0			20.0	20.0	20.0		
1033	Class	Seminary	740	20	37.0	1.0	20				20.0	20.0			20.0			20.0	20.0	20.0		
1034	Class	Seminary	425	20	21.3	1.0	20				20.0	20.0						20.0	20.0	20.0		
1034a	Class	Seminary	410	20	20.5	1.0	20					20.0	20.0	20.0	20.0			20.0	20.0	20.0		
1074	Class	Seminary	849	20	42.5	1.0	20						20.0	20.0	20.0			20.0	20.0	20.0		
1075	Class	Seminary	849	20	42.5	1.0	20						20.0	20.0	20.0			20.0	20.0	20.0		
1076	Class	Seminary	742	20	37.1	1.0	20						20.0	20.0	20.0			20.0	20.0	20.0		
1077	Class	Seminary	955	20	47.8	1.0	20						20.0	20.0	20.0			20.0	20.0	20.0		
BIBLE STUDY																						
1003a	Class	Dreamland	584	20	29.2																	
1003b	Class	Dreamland	647	20	32.4																	
1005	Class	Dreamland	956	20	47.8																	
1006	Class	Dreamland	661	20	33.1																	
1007	Class	Dreamland	938	20	46.9																	
1008	Class	Dreamland	530	20	26.5																	
1008b	Class	Dreamland	461	20	23.1																	
1010	Class	Team Kid	916	20	45.8																	
1011	Class	Team Kid	855	20	42.8																	
1012	Class	Seminary	996	20	49.8	1.0	20.0						20.0	20.0	20.0			20.0	20.0	20.0		
1015	Class	Seminary	485	20	24.3	1.0	20.0						20.0	20.0	20.0			20.0	20.0	20.0		
1016	Class	Seminary	476	20	23.8	1.0	20.0						20.0	20.0	20.0			20.0	20.0	20.0		
1017	Class	Seminary	486	20	24.3	1.0	20.0						20.0	20.0	20.0			20.0	20.0	20.0		
OTHER ROOMS																						
1000	Lobby						0.0															
1026	Kitchen	Seminary	603	200	3.0		2.0				2.0	2.0	2.0	3.0								
1027	Multipurpose	Seminary	4301	15	286.7		50.0					50.0	50.0	50.0								
1002	Class		387	20	19.4		0.0															
1057	Breakroom		527				0.0															
1060	Breakroom		382				0.0															
1059	Copy		125	350	0.4		0.0															
1009	Storage		122	300	0.4		0.0															
1021	Storage		81	300	0.3		0.0															
1060	Storage		125				0.0															
1162	Command		243	100	2.4		0.0															
ROOMS NOT BEING USED																						
900	Open Office		4107	100	41.1		0.0															
1003	Open Office		3491	100	34.9		0.0															
1120	Office		138	100	1.4		0.0															
1122	Office		95	100	1.0		0.0															
1124	Office		92	100	0.9		0.0															
1126	Office		97	100	1.0		0.0															
1128	Office		92	100	0.9		0.0															
1130	Office		95	100	1.0		0.0															
1132	Office		100	100	1.0		0.0															
1140	Office		109	100	1.1		0.0															
1142	Office		313	100	3.1		0.0															
1144	Office		180	100	1.8		0.0															
1150	Office		155	100	1.6		0.0															
1152	Office		93	100	0.9		0.0															
1154	Office		92	100	0.9		0.0															
1156	Office		97	100	1.0		0.0															
1158	Office		94	100	0.9		0.0															
1160	Office		83	100	0.8		0.0															
1494 OCCUPANTS								0.0	7.0	87.0	149.0	239.0	359.0	360.0	327.0	7.0	0.0	360.0	360.0	360.0	0.0	0.0
INDIVIDUAL ALLOCATION								0.0	7.0	11.0	16.0	18.0	16.0	25.0	23.0	7.0	0.0	18.0	18.0	18.0	0.0	0.0
NET OCCUPANTS								0.0	0.0	76.0	133.0	221.0	343.0	335.0	304.0	0.0	0.0	342.0	342.0	342.0	0.0	0.0
OCCUPANT PARKING (SEMINARY INDIVIDUAL PARKING)								0.0	0.0	76.0	133.0	221.0	343.0	335.0	304.0	0.0	0.0	342.0	342.0	342.0	0.0	0.0
OCCUPANT PARKING + INDIVIDUAL ALLOCATION								0.0	7.0	87.0	149.0	239.0	359.0	360.0	327.0	7.0	0.0	360.0	360.0	360.0	0.0	0.0

LIVING WORD CHRISTIAN CENTER
1600 CALIFORNIA CIRCLE
WEDNESDAY ACTIVITIES

RMS	USE		SQ FT	FACTOR	COUNT	ADD	ACTUAL	08:30	09:30	10:30	11:30	12:30	1:30	02:30	3:30	4:30	5:30	6:30	7:30	8:30	9:30	10:30
OFFICE																						
B101	Office	LWCC/LWBC	154	100	1.5		1		1	1	1	1	1	1	1	1						
B104	Office	LWCC/LWBC	136	100	1.4				0	0	0	0	0	0	0	0						
B105	Office	LWCC/LWBC	133	100	1.3		1		1	1	1	1	1	1	1	1						
B106	Office	LWCC/LWBC	245	100	2.5		1		1	1	1	1	1	1	1	1						
B107	Office	LWCC/LWBC	249	100	2.5		1		1	1	1	1	1	1	1	1						
B108	Office	LWCC/LWBC	247	100	2.5		1		1	1	1	1	1	1	1	1						
B109	Open Office	LWCC/LWBC	2041	100	20.4				0	0	0	0	0	0	0	0						
B110	Office	LWCC/LWBC	138	100	1.4		1		1	1	1	1	1	1	1	1						
B111	Office	LWCC/LWBC	132	100	1.3				0	0	0	0	0	0	0	0						
B112	Office	LWCC/LWBC	132	100	1.3		1		1	1	1	1	1	1	1	1						
C105	Office	LWCC/LWBC	119	100	1.2		1		1	1	1	1	1	1	1	1						
C111	Office	LWCC/LWBC	282	100	2.8		1		1	1	1	1	1	1	1	1						
C122	Office	LWCC/LWBC	225	100	2.3		1		1	1	1	1	1	1	1	1						
CHOIR PRACTICE																						
A105	Class	LWCC/LWBC	716	20	35.8																	
SANCTUARY																						
A102	Assembly	LWCC/LWBC	6965	7	995.0																	
A103B	Youth Room	LWCC/LWBC	2050	7	292.9		60												60	60		
A103C	Adult Room	LWCC/LWBC	3043	7	434.7																	
BIBLE STUDY																						
C102	Class	Adult	847	20	42.4	1.0																
C103	Class	Adult	454	20	22.7	1.0																
C103	Class	Adult	293	20	14.7	1.0																
C106	Class	Adult	867	20	43.4	1.0																
C108	Class	Adult	718	20	35.9	1.0																
C110	Class	Adult	287	20	14.4	1.0																
C113	Class	Adult	602	20	30.1	1.0																
C114	Class	Adult	650	20	32.5	1.0																
C116	Class	Adult	1088	20	54.4	1.0																
C117	Class	Adult	744	20	37.2	1.0																
C118	Class	Adult	762	20	38.1	1.0																
C124	Class	Adult	236	20	11.8	1.0																
C125	Class	Adult	202	20	10.1	1.0																
OTHER ROOMS																						
C100	Command		118	100	1.2		0.0															
C107	Conference		478	15	31.9		0.0															
B113	Locker Room		211	100	2.1		0.0															
A112	Breakroom		293				0.0															
B114	Breakroom		362				0.0															
C126	Warehouse		2922	1500	1.9		0.0															
1600 OCCUPANTS								0.0	10.0	10.0	10.0	10.0	10.0	10.0	10.0	10.0	0.0	0.0	60.0	60.0	0.0	0.0
INDIVIDUAL ALLOCATION								0.0	10.0	10.0	10.0	10.0	10.0	10.0	10.0	10.0	0.0	0.0	0.0	0.0	0.0	0.0
NET OCCUPANTS								0.0	0.0	0.0	0.0	0.0	0.0	0.0	0.0	0.0	0.0	0.0	60.0	60.0	0.0	0.0
OCCUPANT PARKING (DIVIDED BY 5)								0.0	0.0	0.0	0.0	0.0	0.0	0.0	0.0	0.0	0.0	0.0	12.0	12.0	0.0	0.0
OCCUPANT PARKING + INDIVIDUAL ALLOCATION								0.0	10.0	10.0	10.0	10.0	10.0	10.0	10.0	10.0	0.0	0.0	12.0	12.0	0.0	0.0
1494 CALIFORNIA CIRCLE								0.0	7.0	87.0	149.0	239.0	359.0	360.0	327.0	7.0	0.0	360.0	360.0	360.0	0.0	0.0
INDIVIDUAL ALLOCATION								0.0	7.0	11.0	16.0	18.0	16.0	25.0	23.0	7.0	0.0	18.0	18.0	18.0	0.0	0.0
NET OCCUPANTS								0.0	0.0	76.0	133.0	221.0	343.0	335.0	304.0	0.0	0.0	342.0	342.0	342.0	0.0	0.0
OCCUPANT PARKING (SEMINARY INDIVIDUAL PARKING)								0.0	0.0	76.0	133.0	221.0	343.0	335.0	304.0	0.0	0.0	342.0	342.0	342.0	0.0	0.0
OCCUPANT PARKING + INDIVIDUAL ALLOCATION								0.0	7.0	87.0	149.0	239.0	359.0	360.0	327.0	7.0	0.0	360.0	360.0	360.0	0.0	0.0
TOTAL 1494 & 1600 OCCUPANTS								0.0	17.0	97.0	159.0	249.0	369.0	370.0	337.0	17.0	0.0	360.0	420.0	420.0	0.0	0.0
INDIVIDUAL ALLOCATION								0.0	17.0	21.0	26.0	28.0	26.0	35.0	33.0	17.0	0.0	18.0	18.0	18.0	0.0	0.0
NET OCCUPANTS								0.0	0.0	76.0	133.0	221.0	343.0	335.0	304.0	0.0	0.0	342.0	402.0	402.0	0.0	0.0
OCCUPANT PARKING (COMBINED ABOVE)								0.0	0.0	76.0	133.0	221.0	343.0	335.0	304.0	0.0	0.0	342.0	354.0	354.0	0.0	0.0
OCCUPANT PARKING + INDIVIDUAL ALLOCATION								0.0	17.0	97.0	159.0	249.0	369.0	370.0	337.0	17.0	0.0	360.0	372.0	372.0	0.0	0.0

LIVING WORD CHRISTIAN CENTER
1494 CALIFORNIA CIRCLE
THURSDAY ACTIVITIES

RMS	USE	USER	SQ FT	FACTOR	COUNT	ADD	ACTUAL	08:30	09:30	10:30	11:30	12:30	1:30	02:30	3:30	4:30	5:30	6:30	7:30	8:30	9:30	10:30
OFFICE																						
1001	Open Office	Seminary	4203	100	42.6																	
1018	Office	Seminary	218	100	2.2																	
1035	Office	Seminary	233	100	2.3																	
1045	Office	Seminary	721	100	7.2																	
1047	Office	Seminary	994	100	9.9																	
1058	Office	Seminary	435	100	4.4		1		1	1	1	1	1	1	1	1						
1061	Office	Seminary	362	100	3.6				0	0	0	0	0	0	0	0						
1062	Office	Seminary	157	100	1.6		1		1	1	1	1	1	1	1	1						
1063	Office	Seminary	174	100	1.7				0	0	0	0	0	0	0	0						
1064	Office	Seminary	133	100	1.3		1		1	1	1	1	1	1	1	1						
1065	Office	Seminary	133	100	1.3				0	0	0	0	0	0	0	0						
1066	Office	Seminary	134	100	1.3		1		1	1	1	1	1	1	1	1						
1067	Office	Seminary	134	100	1.3				0	0	0	0	0	0	0	0						
1068	Office	Seminary	133	100	1.3		1		1	1	1	1	1	1	1	1						
1069	Office	Seminary	133	100	1.3				0	0	0	0	0	0	0	0						
1070	Office	Seminary	134	100	1.3		1		1	1	1	1	1	1	1	1						
1071	Office	Seminary	133	100	1.3				0	0	0	0	0	0	0	0						
1072	Office	Seminary	132	100	1.3		1		1	1	1	1	1	1	1	1						
1073	Office	Seminary	120	100	1.2																	
SEMINARY																						
27	Class	Seminary	768	20	38.4	1.0	20			20.0	20.0	20.0	20.0	20.0	20.0			20.0	20.0	20.0		
28	Class	Seminary	624	20	31.2	1.0	20			20.0	20.0	20.0	20.0	20.0	20.0			20.0	20.0	20.0		
29	Class	Seminary	624	20	31.2	1.0	20			20.0	20.0	20.0	20.0	20.0	20.0			20.0	20.0	20.0		
1029	Class	Seminary	465	20	23.3	1.0	20				20.0	20.0	20.0	20.0	20.0			20.0	20.0	20.0		
1030	Class	Seminary	829	20	41.5	1.0	20					20.0	20.0	20.0				20.0	20.0	20.0		
1031	Class	Seminary	733	20	36.7	1.0	20						20.0	20.0	20.0			20.0	20.0	20.0		
1032	Class	Seminary	859	20	43.0	1.0	20			20.0	20.0	20.0			20.0			20.0	20.0	20.0		
1033	Class	Seminary	740	20	37.0	1.0	20				20.0	20.0			20.0			20.0	20.0	20.0		
1034	Class	Seminary	425	20	21.3	1.0	20				20.0	20.0						20.0	20.0	20.0		
1034a	Class	Seminary	410	20	20.5	1.0	20					20.0	20.0	20.0	20.0			20.0	20.0	20.0		
1074	Class	Seminary	849	20	42.5	1.0	20						20.0	20.0	20.0			20.0	20.0	20.0		
1075	Class	Seminary	849	20	42.5	1.0	20						20.0	20.0	20.0			20.0	20.0	20.0		
1076	Class	Seminary	742	20	37.1	1.0	20						20.0	20.0	20.0			20.0	20.0	20.0		
1077	Class	Seminary	955	20	47.8	1.0	20						20.0	20.0	20.0			20.0	20.0	20.0		
BIBLE STUDY																						
1003a	Class	Dreamland	584	20	29.2																	
1003b	Class	Dreamland	647	20	32.4																	
1005	Class	Dreamland	956	20	47.8																	
1006	Class	Dreamland	661	20	33.1																	
1007	Class	Dreamland	938	20	46.9																	
1008	Class	Dreamland	530	20	26.5																	
1008B	Class	Dreamland	461	20	23.1																	
1010	Class	Team Kid	916	20	45.8																	
1011	Class	Team Kid	855	20	42.8																	
1012	Class	Seminary	996	20	49.8	1.0	20.0						20.0	20.0	20.0			20.0	20.0	20.0		
1015	Class	Seminary	485	20	24.3	1.0	20.0						20.0	20.0	20.0			20.0	20.0	20.0		
1016	Class	Seminary	476	20	23.8	1.0	20.0						20.0	20.0	20.0			20.0	20.0	20.0		
1017	Class	Seminary	486	20	24.3	1.0	20.0						20.0	20.0	20.0			20.0	20.0	20.0		
OTHER ROOMS																						
1000	Lobby						0.0															
1026	Kitchen	Seminary	603	200	3.0		2.0				2.0	2.0	2.0	3.0								
1027	Multipurpose	Seminary	4301	15	286.7		50.0					50.0	50.0	50.0								
1002	Class		387	20	19.4		0.0															
1057	Breakroom		527				0.0															
1080	Breakroom		382				0.0															
1059	Copy		125	350	0.4		0.0															
1009	Storage		122	300	0.4		0.0															
1021	Storage		81	300	0.3		0.0															
1060	Storage		125				0.0															
1102	Command		243	100	2.4		0.0															
ROOMS NOT BEING USED																						
900	Open Office		4107	100	41.1		0.0															
1003	Open Office		3491	100	34.9		0.0															
1120	Office		138	100	1.4		0.0															
1122	Office		95	100	1.0		0.0															
1124	Office		92	100	0.9		0.0															
1126	Office		97	100	1.0		0.0															
1128	Office		92	100	0.9		0.0															
1130	Office		95	100	1.0		0.0															
1132	Office		100	100	1.0		0.0															
1140	Office		109	100	1.1		0.0															
1142	Office		313	100	3.1		0.0															
1144	Office		180	100	1.8		0.0															
1150	Office		155	100	1.6		0.0															
1152	Office		93	100	0.9		0.0															
1154	Office		92	100	0.9		0.0															
1156	Office		97	100	1.0		0.0															
1158	Office		94	100	0.9		0.0															
1160	Office		83	100	0.8		0.0															
1494 OCCUPANTS								0.0	7.0	87.0	149.0	239.0	359.0	360.0	327.0	7.0	0.0	360.0	360.0	360.0	0.0	0.0
INDIVIDUAL ALLOCATION								0.0	7.0	11.0	16.0	18.0	16.0	25.0	23.0	7.0	0.0	18.0	18.0	18.0	0.0	0.0
NET OCCUPANTS								0.0	0.0	76.0	133.0	221.0	343.0	335.0	304.0	0.0	0.0	342.0	342.0	342.0	0.0	0.0
OCCUPANT PARKING (SEMINARY INDIVIDUAL PARKING)								0.0	0.0	76.0	133.0	221.0	343.0	335.0	304.0	0.0	0.0	342.0	342.0	342.0	0.0	0.0
OCCUPANT PARKING + INDIVIDUAL ALLOCATION								0.0	7.0	87.0	149.0	239.0	359.0	360.0	327.0	7.0	0.0	360.0	360.0	360.0	0.0	0.0

LIVING WORD CHRISTIAN CENTER
1600 CALIFORNIA CIRCLE
THURSDAY ACTIVITIES

RMS	USE		SQ FT	FACTOR	COUNT	ADD	ACTUAL	08:30	09:30	10:30	11:30	12:30	1:30	02:30	3:30	4:30	5:30	6:30	7:30	8:30	9:30	10:30
OFFICE																						
B101	Office	LWCC/LWBC	154	100	1.5		1		1	1	1	1	1	1	1	1						
B104	Office	LWCC/LWBC	136	100	1.4				0	0	0	0	0	0	0	0						
B105	Office	LWCC/LWBC	133	100	1.3		1		1	1	1	1	1	1	1	1						
B106	Office	LWCC/LWBC	245	100	2.5		1		1	1	1	1	1	1	1	1						
B107	Office	LWCC/LWBC	249	100	2.5		1		1	1	1	1	1	1	1	1						
B108	Office	LWCC/LWBC	247	100	2.5		1		1	1	1	1	1	1	1	1						
B109	Open Office	LWCC/LWBC	2041	100	20.4				0	0	0	0	0	0	0	0						
B110	Office	LWCC/LWBC	138	100	1.4		1		1	1	1	1	1	1	1	1						
B111	Office	LWCC/LWBC	132	100	1.3				0	0	0	0	0	0	0	0						
B112	Office	LWCC/LWBC	132	100	1.3		1		1	1	1	1	1	1	1	1						
C105	Office	LWCC/LWBC	119	100	1.2		1		1	1	1	1	1	1	1	1						
C111	Office	LWCC/LWBC	283	100	2.8		1		1	1	1	1	1	1	1	1						
C122	Office	LWCC/LWBC	225	100	2.3		1		1	1	1	1	1	1	1	1						
CHOIR PRACTICE																						
A105	Class	LWCC/LWBC	716	20	35.8																	
SANCTUARY																						
A102	Assembly	LWCC/LWBC	6965	7	995.0																	
A103B	Youth Room	LWCC/LWBC	2050	7	292.9																	
A103C	Adult Room	LWCC/LWBC	3043	7	434.7																	
BIBLE STUDY																						
C102	Class	Adult	847	20	42.4	1.0	20		20.0	20.0	20.0											
C103	Class	Adult	454	20	22.7	1.0																
C103	Class	Adult	293	20	14.7	1.0																
C106	Class	Adult	867	20	43.4	1.0																
C108	Class	Adult	718	20	35.9	1.0																
C110	Class	Adult	287	20	14.4	1.0																
C113	Class	Adult	602	20	30.1	1.0																
C114	Class	Adult	650	20	32.5	1.0																
C116	Class	Adult	1088	20	54.4	1.0																
C117	Class	Adult	744	20	37.2	1.0																
C118	Class	Adult	762	20	38.1	1.0																
C124	Class	Adult	236	20	11.8	1.0																
C125	Class	Adult	202	20	10.1	1.0																
OTHER ROOMS																						
C100	Command		118	100	1.2		0.0															
C107	Conference		478	15	31.9		0.0															
B113	Locker Room		211	100	2.1		0.0															
A112	Breakroom		293				0.0															
B114	Breakroom		362				0.0															
C126	Warehouse		2922	1500	1.9		0.0															
1600 OCCUPANTS								0.0	30.0	30.0	30.0	10.0	10.0	10.0	10.0	10.0	0.0	0.0	0.0	0.0	0.0	0.0
INDIVIDUAL ALLOCATION								0.0	10.0	10.0	10.0	10.0	10.0	10.0	10.0	10.0	0.0	0.0	0.0	0.0	0.0	0.0
NET OCCUPANTS								0.0	20.0	20.0	20.0	0.0	0.0	0.0	0.0	0.0	0.0	0.0	0.0	0.0	0.0	0.0
OCCUPANT PARKING (DIVIDED BY 5)								0.0	4.0	4.0	4.0	0.0	0.0	0.0	0.0	0.0	0.0	0.0	0.0	0.0	0.0	0.0
OCCUPANT PARKING + INDIVIDUAL ALLOCATION								0.0	14.0	14.0	14.0	10.0	10.0	10.0	10.0	10.0	0.0	0.0	0.0	0.0	0.0	0.0
1494 CALIFORNIA CIRCLE								0.0	7.0	87.0	149.0	239.0	359.0	360.0	327.0	7.0	0.0	360.0	360.0	360.0	0.0	0.0
INDIVIDUAL ALLOCATION								0.0	7.0	11.0	16.0	18.0	16.0	25.0	23.0	7.0	0.0	18.0	18.0	18.0	0.0	0.0
NET OCCUPANTS								0.0	0.0	76.0	133.0	221.0	343.0	335.0	304.0	0.0	0.0	342.0	342.0	342.0	0.0	0.0
OCCUPANT PARKING (SEMINARY INDIVIDUAL PARKING)								0.0	0.0	76.0	133.0	221.0	343.0	335.0	304.0	0.0	0.0	342.0	342.0	342.0	0.0	0.0
OCCUPANT PARKING + INDIVIDUAL ALLOCATION								0.0	7.0	87.0	149.0	239.0	359.0	360.0	327.0	7.0	0.0	360.0	360.0	360.0	0.0	0.0
TOTAL 1494 & 1600 OCCUPANTS								0.0	37.0	117.0	179.0	249.0	369.0	370.0	337.0	17.0	0.0	360.0	360.0	360.0	0.0	0.0
INDIVIDUAL ALLOCATION								0.0	17.0	21.0	26.0	28.0	26.0	35.0	33.0	17.0	0.0	18.0	18.0	18.0	0.0	0.0
NET OCCUPANTS								0.0	20.0	96.0	153.0	221.0	343.0	335.0	304.0	0.0	0.0	342.0	342.0	342.0	0.0	0.0
OCCUPANT PARKING (COMBINED ABOVE)								0.0	4.0	80.0	137.0	221.0	343.0	335.0	304.0	0.0	0.0	342.0	342.0	342.0	0.0	0.0
OCCUPANT PARKING + INDIVIDUAL ALLOCATION								0.0	21.0	101.0	163.0	249.0	369.0	370.0	337.0	17.0	0.0	360.0	360.0	360.0	0.0	0.0

LIVING WORD CHRISTIAN CENTER
1494 CALIFORNIA CIRCLE
FRIDAY ACTIVITIES

RMS	USE	USER	SQ FT	FACTOR	COUNT	ADD	ACTUAL	08:30	09:30	10:30	11:30	12:30	1:30	02:30	3:30	4:30	5:30	6:30	7:30	8:30	9:30	10:30
OFFICE																						
1001	Open Office	Seminary	4263	100	42.6																	
1018	Office	Seminary	218	100	2.2																	
1035	Office	Seminary	233	100	2.3																	
1045	Office	Seminary	221	100	2.2																	
1047	Office	Seminary	994	100	9.9																	
1058	Office	Seminary	435	100	4.4		1		1	1	1	1	1	1	1	1						
1061	Office	Seminary	362	100	3.6				0	0	0	0	0	0	0	0						
1062	Office	Seminary	157	100	1.6		1		1	1	1	1	1	1	1	1						
1063	Office	Seminary	174	100	1.7				0	0	0	0	0	0	0	0						
1064	Office	Seminary	133	100	1.3		1		1	1	1	1	1	1	1	1						
1065	Office	Seminary	133	100	1.3				0	0	0	0	0	0	0	0						
1066	Office	Seminary	134	100	1.3		1		1	1	1	1	1	1	1	1						
1067	Office	Seminary	134	100	1.3				0	0	0	0	0	0	0	0						
1068	Office	Seminary	133	100	1.3		1		1	1	1	1	1	1	1	1						
1069	Office	Seminary	133	100	1.3				0	0	0	0	0	0	0	0						
1070	Office	Seminary	134	100	1.3		1		1	1	1	1	1	1	1	1						
1071	Office	Seminary	133	100	1.3				0	0	0	0	0	0	0	0						
1072	Office	Seminary	132	100	1.3		1		1	1	1	1	1	1	1	1						
1073	Office	Seminary	120	100	1.2																	
SEMINARY																						
27	Class	Seminary	768	20	38.4	1.0	20			20.0	20.0	20.0	20.0	20.0	20.0			20.0	20.0	20.0		
28	Class	Seminary	624	20	31.2	1.0	20			20.0	20.0	20.0	20.0	20.0	20.0			20.0	20.0	20.0		
29	Class	Seminary	624	20	31.2	1.0	20			20.0	20.0	20.0	20.0	20.0	20.0			20.0	20.0	20.0		
1029	Class	Seminary	465	20	23.3	1.0	20				20.0	20.0	20.0	20.0	20.0			20.0	20.0	20.0		
1030	Class	Seminary	829	20	41.5	1.0	20					20.0	20.0	20.0				20.0	20.0	20.0		
1031	Class	Seminary	733	20	36.7	1.0	20						20.0	20.0	20.0			20.0	20.0	20.0		
1032	Class	Seminary	859	20	43.0	1.0	20			20.0	20.0	20.0			20.0			20.0	20.0	20.0		
1033	Class	Seminary	740	20	37.0	1.0	20				20.0	20.0			20.0			20.0	20.0	20.0		
1034	Class	Seminary	425	20	21.3	1.0	20				20.0	20.0						20.0	20.0	20.0		
1034a	Class	Seminary	410	20	20.5	1.0	20					20.0	20.0	20.0	20.0			20.0	20.0	20.0		
1074	Class	Seminary	849	20	42.5	1.0	20						20.0	20.0	20.0			20.0	20.0	20.0		
1075	Class	Seminary	849	20	42.5	1.0	20						20.0	20.0	20.0			20.0	20.0	20.0		
1076	Class	Seminary	742	20	37.1	1.0	20						20.0	20.0	20.0			20.0	20.0	20.0		
1077	Class	Seminary	955	20	47.8	1.0	20						20.0	20.0	20.0			20.0	20.0	20.0		
BIBLE STUDY																						
1003a	Class	Dreamland	584	20	29.2																	
1003b	Class	Dreamland	647	20	32.4																	
1005	Class	Dreamland	956	20	47.8																	
1006	Class	Dreamland	661	20	33.1																	
1007	Class	Dreamland	938	20	46.9																	
1008	Class	Dreamland	530	20	26.5																	
1008b	Class	Dreamland	461	20	23.1																	
1010	Class	Team Kid	916	20	45.8																	
1011	Class	Team Kid	855	20	42.8																	
1012	Class	Seminary	996	20	49.8	1.0	20.0						20.0	20.0	20.0			20.0	20.0	20.0		
1015	Class	Seminary	485	20	24.3	1.0	20.0						20.0	20.0	20.0			20.0	20.0	20.0		
1016	Class	Seminary	476	20	23.8	1.0	20.0						20.0	20.0	20.0			20.0	20.0	20.0		
1017	Class	Seminary	486	20	24.3	1.0	20.0						20.0	20.0	20.0			20.0	20.0	20.0		
OTHER ROOMS																						
1000	Lobby						0.0															
1026	Kuchen	Seminary	603	200	3.0		2.0				2.0	2.0	2.0	2.0								
1027	Multipurpose	Seminary	4301	15	286.7		50.0					50.0	50.0	50.0								
1002	Class		387	20	19.4		0.0															
1057	Breakroom		227				0.0															
1060	Breakroom		382				0.0															
1059	Copy		125	350	0.4		0.0															
1009	Storage		122	300	0.4		0.0															
1021	Storage		81	300	0.3		0.0															
1060	Storage		125				0.0															
1162	Command		243	100	2.4		0.0															
ROOMS NOT BEING USED																						
900	Open Office		4107	100	41.1		0.0															
1003	Open Office		3491	100	34.9		0.0															
1120	Office		138	100	1.4		0.0															
1122	Office		95	100	1.0		0.0															
1124	Office		92	100	0.9		0.0															
1126	Office		97	100	1.0		0.0															
1128	Office		92	100	0.9		0.0															
1130	Office		95	100	1.0		0.0															
1132	Office		100	100	1.0		0.0															
1140	Office		109	100	1.1		0.0															
1142	Office		313	100	3.1		0.0															
1144	Office		180	100	1.8		0.0															
1150	Office		155	100	1.6		0.0															
1152	Office		93	100	0.9		0.0															
1154	Office		92	100	0.9		0.0															
1156	Office		97	100	1.0		0.0															
1158	Office		94	100	0.9		0.0															
1160	Office		83	100	0.8		0.0															
1494 OCCUPANTS								0.0	7.0	87.0	149.0	239.0	359.0	360.0	327.0	7.0	0.0	360.0	360.0	360.0	0.0	0.0
INDIVIDUAL ALLOCATION								0.0	7.0	11.0	16.0	18.0	16.0	25.0	23.0	7.0	0.0	18.0	18.0	18.0	0.0	0.0
NET OCCUPANTS								0.0	0.0	76.0	133.0	221.0	343.0	335.0	304.0	0.0	0.0	342.0	342.0	342.0	0.0	0.0
OCCUPANT PARKING (SEMINARY INDIVIDUAL PARKING)								0.0	0.0	76.0	133.0	221.0	343.0	335.0	304.0	0.0	0.0	342.0	342.0	342.0	0.0	0.0
OCCUPANT PARKING + INDIVIDUAL ALLOCATION								0.0	7.0	87.0	149.0	239.0	359.0	360.0	327.0	7.0	0.0	360.0	360.0	360.0	0.0	0.0

LIVING WORD CHRISTIAN CENTER
1600 CALIFORNIA CIRCLE
FRIDAY ACTIVITIES

RMS	USE		SQ FT	FACTOR	COUNT	ADD	ACTUAL	08:30	09:30	10:30	11:30	12:30	1:30	02:30	3:30	4:30	5:30	6:30	7:30	8:30	9:30	10:30
OFFICE																						
B101	Office	LWCC/LWBC	154	100	1.5		1		1	1	1	1	1	1	1	1						
B104	Office	LWCC/LWBC	136	100	1.4				0	0	0	0	0	0	0	0						
B105	Office	LWCC/LWBC	133	100	1.3		1		1	1	1	1	1	1	1	1						
B106	Office	LWCC/LWBC	245	100	2.5		1		1	1	1	1	1	1	1	1						
B107	Office	LWCC/LWBC	249	100	2.5		1		1	1	1	1	1	1	1	1						
B108	Office	LWCC/LWBC	247	100	2.5		1		1	1	1	1	1	1	1	1						
B109	Open Office	LWCC/LWBC	2041	100	20.4				0	0	0	0	0	0	0	0						
B110	Office	LWCC/LWBC	138	100	1.4		1		1	1	1	1	1	1	1	1						
B111	Office	LWCC/LWBC	132	100	1.3				0	0	0	0	0	0	0	0						
B112	Office	LWCC/LWBC	132	100	1.3		1		1	1	1	1	1	1	1	1						
C105	Office	LWCC/LWBC	119	100	1.2		1		1	1	1	1	1	1	1	1						
C111	Office	LWCC/LWBC	283	100	2.8		1		1	1	1	1	1	1	1	1						
C122	Office	LWCC/LWBC	225	100	2.3		1		1	1	1	1	1	1	1	1						
CHOIR PRACTICE																						
A105	Class	LWCC/LWBC	716	20	35.8																	
SANCTUARY																						
A102	Assembly	LWCC/LWBC	6965	7	995.0																	
A103B	Youth Room	LWCC/LWBC	2050	7	292.9		20												20	20		
A103C	Adult Room	LWCC/LWBC	3043	7	434.7																30	30
BIBLE STUDY																						
C102	Class	Adult	847	20	42.4	1.0																
C103	Class	Adult	454	20	22.7	1.0																
C103	Class	Adult	293	20	14.7	1.0																
C106	Class	Adult	867	20	43.4	1.0																
C108	Class	Adult	718	20	35.9	1.0																
C110	Class	Adult	287	20	14.4	1.0																
C113	Class	Adult	602	20	30.1	1.0	20												20.0	20.0		
C114	Class	Adult	650	20	32.5	1.0	20												20.0	20.0		
C116	Class	Adult	1088	20	54.4	1.0	20												20.0	20.0		
C117	Class	Adult	744	20	37.2	1.0	20												20.0	20.0		
C118	Class	Adult	762	20	38.1	1.0	20												20.0	20.0		
C124	Class	Adult	236	20	11.8	1.0																
C125	Class	Adult	202	20	10.1	1.0																
OTHER ROOMS																						
C100	Command		118	100	1.2		0.0															
C107	Conference		478	15	31.9		0.0															
B113	Locker Room		211	100	2.1		0.0															
A112	Breakroom		293				0.0															
B114	Breakroom		302				0.0															
C126	Warehouse		2922	1500	1.9		0.0															
1600 OCCUPANTS								0.0	10.0	10.0	10.0	10.0	10.0	10.0	10.0	10.0	0.0	0.0	120.0	120.0	30.0	30.0
INDIVIDUAL ALLOCATION								0.0	10.0	10.0	10.0	10.0	10.0	10.0	10.0	10.0	0.0	0.0	5.0	5.0	0.0	0.0
NET OCCUPANTS								0.0	0.0	0.0	0.0	0.0	0.0	0.0	0.0	0.0	0.0	0.0	115.0	115.0	30.0	30.0
OCCUPANT PARKING (DIVIDED BY 5)								0.0	0.0	0.0	0.0	0.0	0.0	0.0	0.0	0.0	0.0	0.0	23.0	23.0	6.0	6.0
OCCUPANT PARKING + INDIVIDUAL ALLOCATION								0.0	10.0	10.0	10.0	10.0	10.0	10.0	10.0	10.0	0.0	0.0	28.0	28.0	6.0	6.0
1494 CALIFORNIA CIRCLE								0.0	7.0	87.0	149.0	239.0	359.0	360.0	327.0	7.0	0.0	360.0	360.0	360.0	0.0	0.0
INDIVIDUAL ALLOCATION								0.0	7.0	11.0	16.0	18.0	16.0	25.0	23.0	7.0	0.0	18.0	18.0	18.0	0.0	0.0
NET OCCUPANTS								0.0	0.0	76.0	133.0	221.0	343.0	335.0	304.0	0.0	0.0	342.0	342.0	342.0	0.0	0.0
OCCUPANT PARKING (SEMINARY INDIVIDUAL PARKING)								0.0	0.0	76.0	133.0	221.0	343.0	335.0	304.0	0.0	0.0	342.0	342.0	342.0	0.0	0.0
OCCUPANT PARKING + INDIVIDUAL ALLOCATION								0.0	7.0	87.0	149.0	239.0	359.0	360.0	327.0	7.0	0.0	360.0	360.0	360.0	0.0	0.0
TOTAL 1494 & 1600 OCCUPANTS								0.0	17.0	97.0	159.0	249.0	369.0	370.0	337.0	17.0	0.0	360.0	480.0	480.0	30.0	30.0
INDIVIDUAL ALLOCATION								0.0	17.0	21.0	26.0	28.0	26.0	35.0	33.0	17.0	0.0	18.0	23.0	23.0	0.0	0.0
NET OCCUPANTS								0.0	0.0	76.0	133.0	221.0	343.0	335.0	304.0	0.0	0.0	342.0	457.0	457.0	30.0	30.0
OCCUPANT PARKING (COMBINED ABOVE)								0.0	0.0	76.0	133.0	221.0	343.0	335.0	304.0	0.0	0.0	342.0	365.0	365.0	6.0	6.0
OCCUPANT PARKING + INDIVIDUAL ALLOCATION								0.0	17.0	97.0	159.0	249.0	369.0	370.0	337.0	17.0	0.0	360.0	388.0	388.0	6.0	6.0

LIVING WORD CHRISTIAN CENTER
1494 CALIFORNIA CIRCLE
SATURDAY ACTIVITIES

RMS	USE	USER	SQ FT	FACTOR	COUNT	ADD	ACTUAL	08:30	09:30	10:30	11:30	12:30	1:30	02:30	3:30	4:30	5:30	6:30	7:30	8:30	9:30	10:30
OFFICE																						
1001	Open Office	Seminary	4263	100	42.6																	
1018	Office	Seminary	218	100	2.2																	
1035	Office	Seminary	223	100	2.2																	
1045	Office	Seminary	721	100	7.2																	
1047	Office	Seminary	994	100	9.9																	
1058	Office	Seminary	435	100	4.4																	
1061	Office	Seminary	362	100	3.6																	
1062	Office	Seminary	157	100	1.6																	
1063	Office	Seminary	174	100	1.7																	
1064	Office	Seminary	133	100	1.3																	
1065	Office	Seminary	133	100	1.3																	
1066	Office	Seminary	134	100	1.3																	
1067	Office	Seminary	134	100	1.3																	
1068	Office	Seminary	133	100	1.3																	
1069	Office	Seminary	133	100	1.3																	
1070	Office	Seminary	134	100	1.3																	
1071	Office	Seminary	133	100	1.3																	
1072	Office	Seminary	132	100	1.3																	
1073	Office	Seminary	120	100	1.2																	
SEMINARY																						
27	Class	Seminary	768	20	38.4	1.0	10			10.0	10.0		10.0	10.0	10.0							
28	Class	Seminary	624	20	31.2	1.0	10			10.0	10.0		10.0	10.0	10.0							
29	Class	Seminary	624	20	31.2	1.0	10			10.0	10.0		10.0	10.0	10.0							
1029	Class	Seminary	465	20	23.3	1.0	10			10.0	10.0		10.0	10.0	10.0							
1030	Class	Seminary	829	20	41.5	1.0	10			10.0	10.0		10.0	10.0	10.0							
1031	Class	Seminary	733	20	36.7	1.0	10			10.0	10.0		10.0	10.0	10.0							
1032	Class	Seminary	859	20	43.0	1.0	10			10.0	10.0		10.0	10.0	10.0							
1033	Class	Seminary	740	20	37.0	1.0	10			10.0	10.0		10.0	10.0	10.0							
1034	Class	Seminary	425	20	21.3	1.0	10			10.0	10.0		10.0	10.0	10.0							
1034a	Class	Seminary	410	20	20.5	1.0	10			10.0	10.0		10.0	10.0	10.0							
1074	Class	Seminary	849	20	42.5	1.0	10			10.0	10.0		10.0	10.0	10.0							
1075	Class	Seminary	849	20	42.5	1.0	10			10.0	10.0		10.0	10.0	10.0							
1076	Class	Seminary	742	20	37.1	1.0	10			10.0	10.0		10.0	10.0	10.0							
1077	Class	Seminary	955	20	47.8	1.0	10			10.0	10.0		10.0	10.0	10.0							
BIBLE STUDY																						
1003a	Class	Dreamland	584	20	29.2	1.0	10.0		10.0	10.0	10.0	10.0										
1003b	Class	Dreamland	647	20	32.4	1.0	15.0		15.0	15.0	15.0	15.0										
1005	Class	Dreamland	956	20	47.8	1.0	15.0		15.0	15.0	15.0	15.0										
1006	Class	Dreamland	661	20	33.1	1.0	15.0		15.0	15.0	15.0	15.0										
1007	Class	Dreamland	938	20	46.9	1.0	15.0		15.0	15.0	15.0	15.0										
1008	Class	Dreamland	530	20	26.5	1.0	10.0		10.0	10.0	10.0	10.0										
1008b	Class	Dreamland	461	20	23.1	1.0	10.0		10.0	10.0	10.0	10.0										
1010	Class	Team Kid	916	20	45.8	1.0	15.0		15.0	15.0	15.0	15.0										
1011	Class	Team Kid	855	20	42.8	1.0	15.0		15.0	15.0	15.0	15.0										
1012	Class	Sr/Jr. High	996	20	49.8	1.0	15.0		15.0	15.0	15.0	15.0										
1015	Class	Sr/Jr. High	485	20	24.3	1.0	10.0		10.0	10.0	10.0	10.0										
1016	Class	Sr/Jr. High	476	20	23.8	1.0	10.0		10.0	10.0	10.0	10.0										
1017	Class	Sr/Jr. High	486	20	24.3	1.0	10.0		10.0	10.0	10.0	10.0										
OTHER ROOMS																						
1000	Lobby						0.0															
1020	Kitchen	Church	603	200	3.0		3.0				3.0	3.0	3.0	3.0								
1027	Multipurpose	Church	4301	15	286.7		50.0					150.0	150.0	50.0								
1002	Class		387	20	19.4		0.0															
1057	Breakroom		527				0.0															
1060	Breakroom		382				0.0															
1059	Copy		125	350	0.4		0.0															
1009	Storage		122	300	0.4		0.0															
1021	Storage		81	300	0.3		0.0															
1060	Storage		125				0.0															
1162	Command		243	100	2.4		0.0															
ROOMS NOT BEING USED																						
900	Open Office		4107	100	41.1		0.0															
1003	Open Office		3491	100	34.9		0.0															
1120	Office		138	100	1.4		0.0															
1122	Office		95	100	1.0		0.0															
1124	Office		92	100	0.9		0.0															
1126	Office		97	100	1.0		0.0															
1128	Office		92	100	0.9		0.0															
1130	Office		95	100	1.0		0.0															
1132	Office		100	100	1.0		0.0															
1140	Office		109	100	1.1		0.0															
1142	Office		313	100	3.1		0.0															
1144	Office		180	100	1.8		0.0															
1150	Office		155	100	1.6		0.0															
1152	Office		93	100	0.9		0.0															
1154	Office		92	100	0.9		0.0															
1156	Office		97	100	1.0		0.0															
1158	Office		94	100	0.9		0.0															
1160	Office		83	100	0.8		0.0															
1494 OCCUPANTS								0.0	165.0	305.0	308.0	318.0	293.0	193.0	140.0	0.0	0.0	0.0	0.0	0.0	0.0	0.0
INDIVIDUAL ALLOCATION								0.0	13.0	27.0	30.0	30.0	17.0	17.0	17.0	0.0	0.0	0.0	0.0	0.0	0.0	0.0
NET OCCUPANTS								0.0	152.0	278.0	278.0	288.0	276.0	176.0	123.0	0.0	0.0	0.0	0.0	0.0	0.0	0.0
OCCUPANT PARKING (SEMINARY INDIVIDUAL PARKING, CHURCH DIVIDED BY 5)								0.0	33.0	173.0	174.0	64.0	171.0	151.0	140.0	0.0	0.0	0.0	0.0	0.0	0.0	0.0
OCCUPANT PARKING + INDIVIDUAL ALLOCATION								0.0	46.0	200.0	204.0	94.0	188.0	168.0	157.0	0.0	0.0	0.0	0.0	0.0	0.0	0.0

LIVING WORD CHRISTIAN CENTER
1600 CALIFORNIA CIRCLE
SATURDAY ACTIVITIES

RMS	USE		SQ FT	FACTOR	COUNT	ADD	ACTUAL	08:30	09:30	10:30	11:30	12:30	1:30	02:30	3:30	4:30	5:30	6:30	7:30	8:30	9:30	10:30
OFFICE																						
B101	Office	LWCC/LWBC	154	100	1.5		1		1	1	1	1	1	1	1	1	1					
B104	Office	LWCC/LWBC	136	100	1.4				0	0	0	0	0	0	0	0	0					
B105	Office	LWCC/LWBC	133	100	1.3		1		1	1	1	1	1	1	1	1	1					
B106	Office	LWCC/LWBC	245	100	2.5		1		1	1	1	1	1	1	1	1	1					
B107	Office	LWCC/LWBC	249	100	2.5		1		1	1	1	1	1	1	1	1	1					
B108	Office	LWCC/LWBC	247	100	2.5		1		1	1	1	1	1	1	1	1	1					
B109	Open Office	LWCC/LWBC	2041	100	20.4				0	0	0	0	0	0	0	0	0					
B110	Office	LWCC/LWBC	138	100	1.4		1		1	1	1	1	1	1	1	1	1					
B111	Office	LWCC/LWBC	132	100	1.3				0	0	0	0	0	0	0	0	0					
B112	Office	LWCC/LWBC	132	100	1.3		1		1	1	1	1	1	1	1	1	1					
C105	Office	LWCC/LWBC	119	100	1.2		1		1	1	1	1	1	1	1	1	1					
C111	Office	LWCC/LWBC	283	100	2.8		1		1	1	1	1	1	1	1	1	1					
C122	Office	LWCC/LWBC	225	100	2.3		1		1	1	1	1	1	1	1	1	1					
CHOIR PRACTICE																						
A105	Class	LWCC/LWBC	716	20	35.8		35											35	35	35		
SANCTUARY																						
A102	Assembly	LWCC/LWBC	6965	7	995.0																	
A103B	Youth Room	LWCC/LWBC	2050	7	292.9					25	25											
A103C	Adult Room	LWCC/LWBC	3043	7	434.7																	
BIBLE STUDY																						
C102	Class	Adult	847	20	42.4	1.0	20		20.0	20.0	20.0											
C103	Class	Adult	454	20	22.7	1.0																
C103	Class	Adult	293	20	14.7	1.0																
C106	Class	Adult	867	20	43.4	1.0																
C108	Class	Adult	718	20	35.9	1.0																
C110	Class	Adult	287	20	14.4	1.0																
C113	Class	Adult	602	20	30.1	1.0																
C114	Class	Adult	650	20	32.5	1.0																
C116	Class	Adult	1088	20	54.4	1.0																
C117	Class	Adult	744	20	37.2	1.0																
C118	Class	Adult	762	20	38.1	1.0																
C124	Class	Adult	236	20	11.8	1.0																
C125	Class	Adult	202	20	10.1	1.0																
OTHER ROOMS																						
C100	Command		118	100	1.2		0.0															
C107	Conference		478	15	31.9		0.0															
B113	Locker Room		211	100	2.1		0.0															
A112	Breakroom		293				0.0															
B114	Breakroom		362				0.0															
C126	Warehouse		2922	1500	1.9		0.0															
1600 OCCUPANTS								0.0	30.0	55.0	55.0	10.0	10.0	10.0	10.0	10.0	10.0	35.0	35.0	35.0	0.0	0.0
INDIVIDUAL ALLOCATION								0.0	10.0	10.0	10.0	10.0	10.0	10.0	10.0	10.0	10.0	0.0	0.0	0.0	0.0	0.0
NET OCCUPANTS								0.0	20.0	45.0	45.0	0.0	0.0	0.0	0.0	0.0	0.0	35.0	35.0	35.0	0.0	0.0
OCCUPANT PARKING (DIVIDED BY 5)								0.0	4.0	9.0	9.0	0.0	0.0	0.0	0.0	0.0	0.0	7.0	7.0	7.0	0.0	0.0
OCCUPANT PARKING + INDIVIDUAL ALLOCATION								0.0	14.0	19.0	19.0	10.0	10.0	10.0	10.0	10.0	10.0	7.0	7.0	7.0	0.0	0.0
1494 CALIFORNIA CIRCLE								0.0	165.0	305.0	308.0	318.0	293.0	193.0	140.0	0.0	0.0	0.0	0.0	0.0	0.0	0.0
INDIVIDUAL ALLOCATION								0.0	13.0	27.0	30.0	30.0	17.0	17.0	17.0	0.0	0.0	0.0	0.0	0.0	0.0	0.0
NET OCCUPANTS								0.0	152.0	278.0	278.0	288.0	276.0	176.0	123.0	0.0	0.0	0.0	0.0	0.0	0.0	0.0
OCCUPANT PARKING (SEMINARY INDIVIDUAL PARKING, CHURCH DIVIDED BY 5)								0.0	33.0	173.0	174.0	64.0	171.0	151.0	140.0	0.0	0.0	0.0	0.0	0.0	0.0	0.0
OCCUPANT PARKING + INDIVIDUAL ALLOCATION								0.0	46.0	200.0	204.0	94.0	188.0	168.0	157.0	0.0	0.0	0.0	0.0	0.0	0.0	0.0
TOTAL 1494 & 1600 OCCUPANTS								0.0	195.0	360.0	363.0	328.0	303.0	203.0	150.0	10.0	10.0	35.0	35.0	35.0	0.0	0.0
INDIVIDUAL ALLOCATION								0.0	23.0	37.0	40.0	40.0	27.0	27.0	27.0	10.0	10.0	0.0	0.0	0.0	0.0	0.0
NET OCCUPANTS								0.0	172.0	323.0	323.0	288.0	276.0	176.0	123.0	0.0	0.0	35.0	35.0	35.0	0.0	0.0
OCCUPANT PARKING (COMBINED ABOVE)								0.0	37.0	182.0	183.0	64.0	171.0	151.0	140.0	0.0	0.0	7.0	7.0	7.0	0.0	0.0
OCCUPANT PARKING + INDIVIDUAL ALLOCATION								0.0	60.0	219.0	223.0	104.0	198.0	178.0	167.0	10.0	10.0	7.0	7.0	7.0	0.0	0.0