Stormwater Control Plan

Contour Project

330 Montague Expressway
Milpitas, CA

Prepared By:

1570 Oakland Road San Jose, CA 95131

October 4, 2011

TABLE OF CONTENTS

1. Project Setting **1**

1.A. Project Description 1

1.B. Existing Site Condition 1

1.C. Opportunities and Constraints 1

1.D. Hydrograph Modification Management Requirements 1

2. Measures to Limit Imperviousness **2**

2.A. Measures to Make Development More Compact 2

2.B. Measures to Limit Directly Connected Impervious Surface Area 2

3. Selection and Preliminary Design of Stormwater Treatment BMPs **2**

3.A. General Characteristics of the Treatment Facilities 2

3.B. Specific Characteristics of Each Impervious Area and Treatment Facility 2

4. Source Control Measures **5**

5. Permitting and Code Compliance Issues **6**

6. BMP Operation and Maintenance **6**

6.A. Means to Finance and Implement BMP Maintenance 6

7. Certification **9**

TABLES

Table 1. Proposed Biotreatment Summary 3

Table 2. Hydrodynamic Separator Summary 4

Table 3. Sources and Source Controls 5

APPENDIX A

Biotreatment Cell Detail

Filterra Tree Filter Detail

Up-Flo Filter Detail

APPENDIX B

Conceptual Stormwater Control Plan

APPENDIX C

City of Milpitas C.3 Data Form

1. PROJECT SETTING

1.A. Project Description

The proposed project consists of a Site Development Permit, Planned Unit Development and Tentative Map to allow up to 92 single-family attached and 42 single-family detached residential units on an 8-acre site. The project includes 268 covered parking spaces and 45 uncovered guest parking spaces. The proposed buildings will be three stories in height. The project site is located at the easterly side of the intersection of Montague Expressway and Trade Zone Boulevard. Public right-of-way improvements will be included with the project along the Montague Expressway and Trade Zone Boulevard frontages, and half street improvements will be included along the easterly project boundary.

1.B. Existing Site Condition

The project site is a triangle-shaped property that currently contains three vacant light industrial buildings surrounded by surface parking (Montague Technology Park). Two of the buildings are single-story, and the third is two stories. Turf and landscaping surrounds the buildings, with concrete paths providing pedestrian access between the buildings. A tree-lined turf berm runs along the property line at the back of the sidewalk along the Montague Expressway and Trade Zone Boulevard frontages.

1.C. Opportunities and Constraints

The project site is constrained by existing clay soils and high groundwater elevations. According to the *City of Milpitas Soil Map*, the site is underlain by silty clay loam having a hydrologic group classification of C. The depth to first groundwater is estimated to be less than 10 feet below the ground surface, based on the *City of Milpitas Groundwater Elevation Map.* Both of these conditions make the use of infiltration devices problematic for the project.

The project proposes to maximize the utilization of interior and perimeter landscaping and open space areas for biotreatment of runoff from impervious surfaces, with the incorporation of under drains to reduce the potential for contact between the treated runoff and the surrounding subgrade.

1.D. Hydrograph Modification Management Requirements

The project site is mapped as being within the category of Catchments and Subwatersheds Greater Than or Equal to 65% Impervious (red area) on the Santa Clara Valley Urban Runoff Pollution Prevention Program's map entitled *Classification of Subwatersheds and Catchment Areas for Determining Applicability of Hydromodification Management (HM) Requirements* (Municipal Regional Stormwater Permit, Attachment M). The Hydromodification Standard and associated requirements do not apply to projects within this category, therefore the project is exempt from these requirements.

2. MEASURES TO LIMIT IMPERVIOUSNESS

2.A. Measures to Make Development More Compact

The site plan for the project was designed to incorporate enclosed garages beneath the units, and use minimum widths required by the City of Milpitas for drive aisles. The townhouse and single-family units are up to 3 stories in height, which minimizes their building footprints. The number of surface parking spaces is minimized, as well. This allows for more open space and landscaping throughout the project and reduces the total amount of impervious surface area.

2.B. Measures to Limit Directly Connected Impervious Surface Area

Measures to limit overall impervious surface area on the site include preservation of existing trees along the Montague Expressway and Trade Zone Boulevard frontages, maximizing the use of pervious surface materials and landscaping in open space areas, and creating self retaining areas by disconnecting roof downspouts in appropriate locations. Locations and details are provided on the Conceptual Stormwater Control Plan. (See APPENDIX B)

3. SELECTION AND PRELIMINARY DESIGN OF STORMWATER TREATMENT BMPS

3.A. General Characteristics of the Treatment Facilities

The proposed stormwater treatment facilities for the project include three basic types of controls – media filters, biotreatment cells and tree filters. The biotreatment cells and tree filters are consistent with the Low Impact Development controls described on Provision C.3 of the Municipal Regional Permit, and represent the most feasible landscape-based controls, given the site constraints imposed by the existing clay soil and high groundwater conditions of the site. Most of the biotreatment cells are located around the perimeter of the site, where they can be integrated into the landscape design. The single proposed tree filter is proposed to be located at the bulb of the cul-de-sac street, replacing what would otherwise be a standard storm drain inlet. The third type of treatment control, media filters, is proposed to treat runoff from impervious areas of the site that could not otherwise be engineered to drain to landscape areas for treatment. They are located within the interior areas of the project.

3.B. Specific Characteristics of Each Impervious Area and Treatment Facility

Biotreatment Cells

Each of the proposed biotreatment cells has been sized using a sizing factor of 3.4% (0.034), as specified in the City of Milpitas Stormwater C.3 Guidebook. This factor incorporates a design flow rate of 0.17 inches per hour, which represents two times the 85th percentile hourly rainfall intensity for the local area (from Provision C.3.d of the Municipal Regional Permit). The factor of

0.034 is multiplied by the drainage area to establish the minimum surface area required for each cell. The sizing factor assumes a minimum infiltration rate of 5 inches per hour for the sandy loam soil mixture within the cell, and a conservative runoff coefficient (C-factor) of 1.0. A cross section detail of the proposed biotreatment cells is provided in Appendix A.

The following Table 1 presents a summary of the various biotreatment cell drainage areas, as designated on the Conceptual Stormwater Control Plan. The table indicates the sizes of the drainage areas, types of impervious surfaces treated, sizing factor utilized in the sizing calculations, and minimum surface areas required and proposed.

Table 1. Proposed Biotreatment Summary

Drainage Area Designation	Size (sq. ft.)	Impervious Surfaces	Sizing Factor	Minimum Surface Area (sq. ft.)	Surface Area as Designed (sq. ft.)
B1	13,621	Roof, Paved Driveway	0.034	464	572
B2	5,191	Roof, Paved Driveway	0.034	177	278
B3	3,646	Roof, Paved Driveway, Sidewalk	0.034	124	141
B4	4,096	Roof, Paved Driveway, Sidewalk	0.034	140	168
B5	15,658	Roof, Paved Driveway, Sidewalk	0.034	533	714
B6	5,292	Roof, Paved Driveway, Sidewalk	0.034	180	217
B7	6,246	Roof, Paved Driveway	0.034	213	308
B8	15,398	Roof, Paved Driveway, Sidewalk	0.034	524	638
Total	***69,148***			***2,355***	***3,036***

Tree Filter

Tree filters such as the one proposed provide a form of biotreatment for stormwater runoff by diverting flow from the street gutter into a planter box containing a tree and a sandy loam soil mix to filter out pollutants as the runoff infiltrates vertically. Uptake by the tree roots provides additional pollutant removal. The proposed tree filter has been conservatively sized (6’ x 8’ footprint) to treat runoff from a maximum area of 0.65 acres, although the actual drainage area for the unit is 0.51 acres. The sizing chart for the unit is included on the detail drawing produced by the product manufacturer (see Appendix A.)

Media Filters

In addition to sediment, trash and debris, the proposed media filters remove fine particles, oil and grease, and chemical pollutants from stormwater runoff. The filter units are housed in 48-inch manholes, and contain plastic structures called modules that are filled with filter media

material. Upon entering the unit, trash and sediment drop out of the flow and are collected in the bottom of the manhole, while the runoff passes through the filter modules for treatment. The filter units are proposed for areas of the project that have the highest concentrations of directly connected impervious surface and least amount of landscaping available for surface treatment. They are sized in accordance with the specifications of the manufacturer, based on a treatment flow calculated using the Rational Method (Q = C*i*A, where Q = flow [cubic feet/second], C = runoff coefficient, i = rainfall intensity [inches/hour], and A = total site area [acres]). The rainfall intensity (0.20 flow rate) is dictated by Provision C.3.

The following table summarizes the four media filter units proposed for the project, with drainage areas, types of impervious surfaces treated, runoff coefficients, minimum treatment flows, and units proposed and their maximum treatment capacities provided. A detail of the proposed media filter unit is contained in Appendix A.

Table 2. Media Filter Summary

Drainage Area	Size (A)	Impervious Surfaces	Runoff Coefficient (C)	Rainfall Intensity (i)	Treatment Flow	Proposed Unit	Treatment Capacity
MF1	.18 ac.	Roof, Paved Driveway, Sidewalk	.85	.18	.03 cfs	Up-Flo Filter - 1 Module	.056 cfs
MF2	1.07 ac.	Roof, Paved Driveway, Sidewalk	.85	.18	.16 cfs	Up-Flo Filter – 3 Modules	.17 cfs
MF3	1.96 ac.	Roof, Paved Driveway, Sidewalk	.85	.18	.30 cfs	Up-Flo Filter - 6 Modules	.34 cfs
MF4	.26 ac.	Roof, Paved Driveway, Sidewalk	.85	.18	.04 cfs	Up-Flo Filter - 1 Modules	.056 cfs
Total	***3.47 ac.***				***.53 cfs***		***.62 cfs***

Self Treating Areas

An additional drainage area category shown on the Conceptual Stormwater Control Plan is Self Treating Area. This designation is given to areas containing limited quantities of disconnected impervious surfaces – roofs with disconnected downspouts, sidewalks, porches/patios, etc – that are immediately adjacent to landscaping or other pervious surface areas, and will drain to these depressed surfaces. The criterion used in designating the Self Treating Areas is that the amount of pervious surface or landscaping to which the impervious surfaces drain is greater than or equal to 50% of the impervious tributary area. This is consistent with the guidance for designing self treating areas provided in Chapter 5 of the City of Milpitas Stormwater C.3 Guidebook.

4. Source Control Measures

Development of the project site as proposed would result in potential exposure of runoff to pollutants from the following activities or sources:

- Storm drain inlets
- Trash enclosures;
- Landscape maintenance;
- Car washing and maintenance

Permanent and operational stormwater BMPs will be utilized to control pollutants from these sources, as described in the following table.

Table 3. Sources and Source Control BMPs

Potential Source	Permanent BMPs	Operational BMPs
On-Site Storm Drain Inlets	• All on-site inlets shall be stenciled with "No dumping – drains to creek" or similar message.	• Inlet stencils shall be inspected once annually and replaced or renewed as required. • Residents to receive stormwater pollution prevention information to be provided by the City. • Inlets shall be inspected periodically to avoid blockages and overflows.
Trash Enclosures	• Any trash enclosure structures containing dumpsters or bins shall have drains that are plumbed to the sanitary sewer.	• Drains shall be periodically inspected to avoid blockages and overflows.
Landscape/Outdoor Pesticide Use	• Landscaping shall be designed to minimize required irrigation and runoff, to promote surface infiltration, and to minimize the use of fertilizers and pesticides that can contribute to stormwater pollution.	• Residents to receive Integrated Pest Management (IPM) information to be provided by the City. • All site landscaping is to be maintained by a professional landscaping contractor. Contract

	• Plantings for biotreatment cells will be selected to be appropriate for anticipated soil and moisture conditions. • Where possible, pest-resistant plants will be selected, especially for locations adjacent to hardscape. • Plants will be selected appropriate for site soils, slopes, climate, sun, wind, rain, land use, air movement, ecological consistency, use of recycled water (where applicable), and plant interactions.	must state that landscaping is to be maintained using IPM principles, with minimal or no use of pesticides.
Vehicle and Equipment Cleaning		• Residential leases shall prohibit maintenance, repair, or cleaning of vehicles or other equipment on site.

5. Permitting and Code Compliance Issues

There are no known conflicts between the proposed Stormwater Control Plan and the City of Milpitas ordinances or policies. Any conflicts that are found will be resolved through the design review process or during subsequent permit processing.

6. BMP Operation and Maintenance

6.A. Means to Finance and Implement BMP Maintenance

Proper operation and maintenance of stormwater management facilities will be the responsibility of the property owner in perpetuity. The property owner will be subject to an annual fee (set by the City's standard fee schedule) to offset the cost of inspecting the site or verifying that stormwater management facilities are being maintained.

The applicant will prepare and submit, for the City's review, an acceptable Stormwater Control Operation and Maintenance Plan prior to completion of construction, and will execute a Stormwater Management Facilities Operation and Maintenance Agreement before sale, transfer, or permanent occupancy of the site. The applicant accepts responsibility for maintenance of stormwater management facilities until such responsibility is transferred to another entity.

6.B. Summary of Maintenance

Bioretention cells and tree filters remove pollutants primarily by filtering runoff slowly through an active layer of soil. Routine maintenance is needed to ensure that flow is unobstructed, that erosion is prevented, and that soils are held together by plant roots and are biologically active. Typical routine maintenance consists of the following:

- Inspect inlets for channels, exposure of soil, or other evidence of erosion. Clear any obstructions and remove any accumulation of sediment. Examine rock or other material used as a splash pad and replenish as necessary;
- Inspect outlets for erosion or plugging;
- Inspect side slopes for evidence of instability or erosion and correct as necessary;
- Observe soil in the biotreatment cell or tree filter for uniform percolation throughout. If portions of the facility do not drain within 48 hours after the end of a storm, the soil should be tilled and replanted. Remove any debris or accumulations or sediment;
- Examine the vegetation to ensure that it is healthy and dense enough to provide filtering and to protect soil from erosion. Replenish mulch as necessary, remove fallen leaves and debris, prune large shrubs or trees, and mow turf areas. Confirm that irrigation is adequate and not excessive. Replace dead plants and remove invasive vegetation;
- Abate any potential vectors by filling holes in the ground in and around the cell and by insuring there are no areas where water stands longer than 48 hours following a storm. If mosquito larvae are present and persistent, contact the Santa Clara County Vector Control District for information and advice. Mosquito larvacides should be applied only when absolutely necessary and then only by a licensed individual or contractor.

Media filter maintenance consists of regular inspection and cleaning of the manholes, and scheduled replacement of the filter media within the modules. The following maintenance procedures and recommendations are taken from the Up-Flo™ Filter Operation and Maintenance Manual, produced by Hydro International and distributed by Kristar Enterprises, Inc.

Maintenance events can be categorized as routine or annual. Routine maintenance can include inspection, floatables removal and/or sediment removal. Routine maintenance events do not require entry into the Up-Flo™ chamber. In the case of inspection and floatables removal, a vactor truck is not required. However, a vactor truck is required if the maintenance event is to include sediment removal from the sump of the Up-Flo™ vessel. Annual maintenance includes Media Pack replacement in addition to sediment and floatables removal. In most instances, entry into the Up-Flo™ vessel is required for

Media Pack replacement. There is the need to follow OSHA Confined Space Entry procedures when performing annual maintenance.

The frequency of maintenance procedures can be determined in the field after installation. Hydro International, however, recommends that routine maintenance be completed at least every six months during the first year of operation. Typically, annual maintenance is recommended at least once per year.

During the first year of operation, the unit should be inspected every six months to determine the rate of sediment and floatables accumulation. To prevent from blocking the entryway to the filter media, the sediment must be removed before it completely fills the sump. A simple probe can be used to determine the level of solids in the sediment storage facility. This information can be recorded in maintenance logs to establish a routine maintenance schedule. Pollutant storage volume will be dependent on the sump depth of the Up-Flo™ Filter. A typical 4-foot round manhole Up-Flo™ Filter has 0.6 yd. of sediment storage.

Routine and annual maintenance procedures for a typical 4-foot diameter manhole Up-Flo™ Filter take less than 30 minutes and remove about 360 gallons of water in the process. Spent Media Packs weigh about 40 pounds. Spent Media Packs should be disposed of at a local landfill.

Inspection

Inspection is a simple process that does not involve entry into the Up-Flo™ chamber. Maintenance crews should be familiar with the Up-Flo™ Filter and its components prior to inspection.

Scheduling

- The first year following installation, it is important to inspect your Up-Flo™ Filter regularly to determine your site-specific rate of pollutant accumulation.
- Typically, inspections may be conducted during any season of the year.

Recommended Equipment

- Safety equipment and personal protection equipment (traffic cones, work gloves, etc.)
- Crow bar to remove grate or lid
- Pole with skimmer or net
- Sediment probe
- Hydro International Up-Flo™ Filter Maintenance Log
- Trash bag for removed floatables
- Up-Flo™ Filter Maintenance Log

7. Certification

The selection, sizing and preliminary design of treatment BMPs and other control measures in this plan meet the requirements of Regional Water Quality Control Board Order R2-2009-0074, as amended.

APPENDIX A:

Treatment Control Details

NOTES:
1. SEE LANDSCAPE PLANS FOR PLANTING AND IRRIGATION.

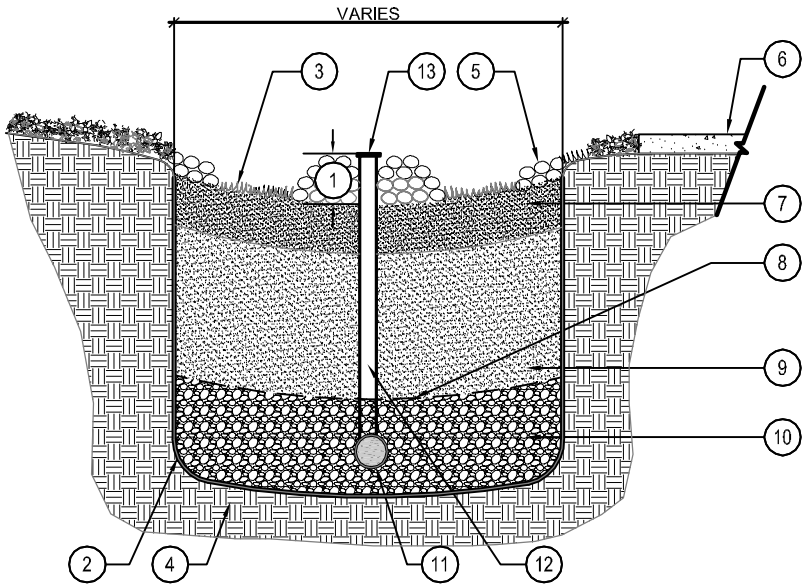

1. PONDING DEPTH FROM INLET OPENING TO GRADE (MIN. 6" DEPTH)
2. IMPERMEABLE LINER (TYPICAL)
3. VEGETATION (SEE LANDSCAPE PLANS)
4. NATIVE GRADE OR CERTIFIED COMPACTED SUBGRADE
5. COBBLE STONE DISSIPATOR ALONG EDGE OF BIORETENTION CELL ADJACENT TO IMPERVIOUS SURFACE
6. IMPERVIOUS SURFACE, SEE PLAN FOR LOCATION AND TYPE
7. PLANTING SOIL MIX (MIN. 6" DEPTH)
8. FILTER FABRIC (TYPICAL)
9. SANDY LOAM WITH PERCOLATION RATE OF 5" TO 10" PER HOUR (MINIMUM 18" DEPTH). SHALL CONFORM TO THE SAN FRANCISCO BAY MUNICIPAL REGIONAL PERMIT-REQUIRED "MODEL BIORETENTION SOIL MEDIA SPECIFICATION" OR EQUIVALENT.
10. DRAIN ROCK (MIN. 12" DEPTH)
11. PERFORATED PVC SUBDRAIN PIPE WITH ATRIUM GRATE CLEANOUT AT EACH END
12. VERTICAL PVC CLEANOUT RISER
13. CLEANOUT

BIOTREATMENT CELL

SCALE: 1"=1'-0"

K-FTNW

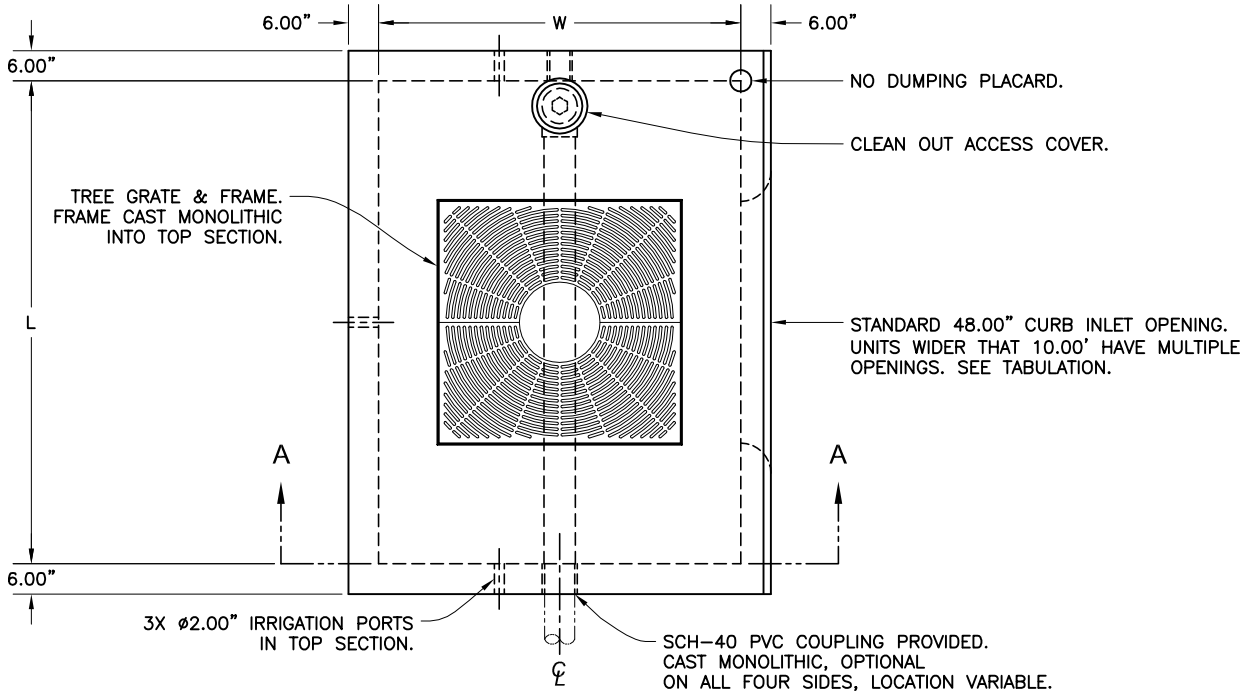

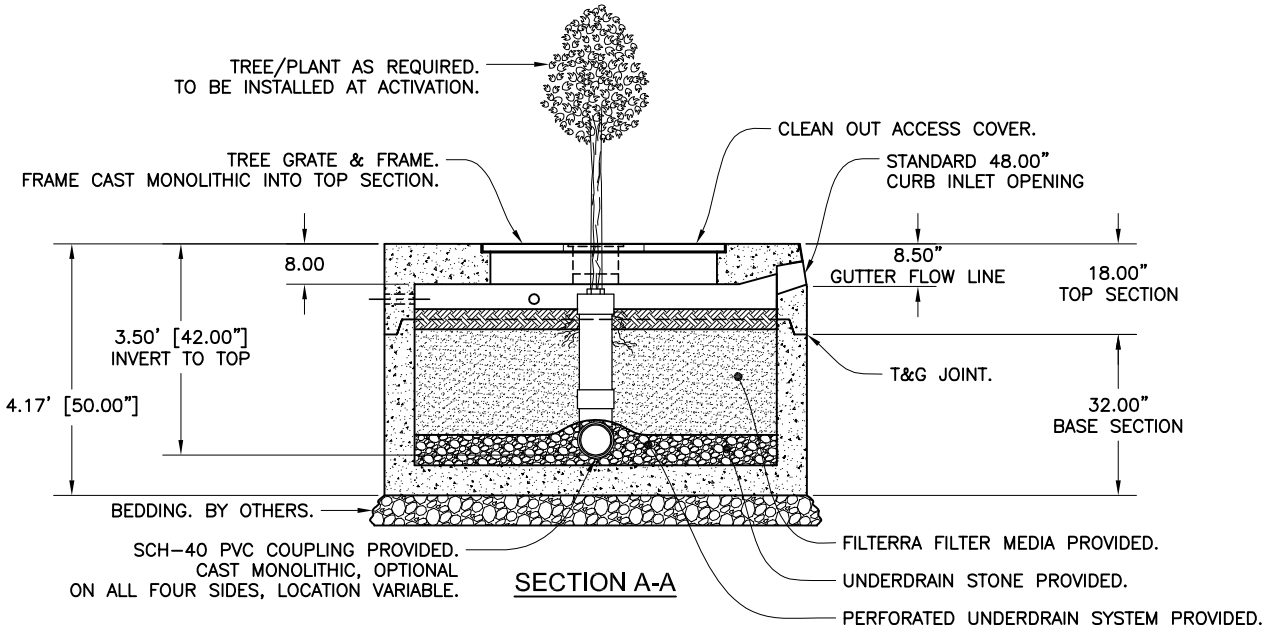

SECTION A-A

TABULATION					
Size / Designation	L (Feet)	W (Feet)	Tree Grate Quantity / Size	Outlet Pipe PVC SCH-40	Inlet Openings Quantity / Size
6' X 4'	6.00'	4.00'	1ea. / 3' x 3'	Ø4.00"	1ea. / 48.00"
6.5' x 4'	6.50'	4.00'	1ea. / 3' x 3'	Ø4.00"	1ea. / 48.00"
8' x 4'	8.00'	4.00'	1ea. / 3' x 3'	Ø4.00"	1ea. / 48.00"
8' x 6'	8.00'	6.00'	1ea. / 4' x 4'	Ø4.00"	1ea. / 48.00"
10' x 6'	10.00'	6.00'	1ea. / 4' x 4'	Ø6.00"	1ea. / 48.00"
12' x 6'	12.00'	6.00'	2ea. / 4' x 4'	Ø6.00"	2ea. / 48.00"
12' x 8'	12.00'	8.00'	2ea. / 4' x 4'	Ø6.00"	2ea. / 48.00"
16' x 4'	16.00'	4.00'	2ea. / 3' x 3'	Ø4.00"	2ea. / 48.00"
16' x 8'	12.00'	8.00'	2ea. / 4' x 4'	Ø6.00"	2ea. / 48.00"
18' x 8'	12.00'	8.00'	3ea. / 4' x 4'	Ø6.00"	3ea. / 48.00"
20' x 8'	20.00'	8.00'	3ea. / 4' x 4'	Ø6.00"	3ea. / 48.00"

MODIFICATION OF DRAWINGS IS PERMITTED ONLY BY WRITTEN AUTHORIZATION FROM KRISTAR ENTERPRISES, INC.

TITLE

Precast Filterra® Unit
Narrow Width Configuration

KriStar Enterprises, Inc.
360 Sutton Place, Santa Rosa, CA 95407
Ph: 800.579.8819, Fax: 707.524.8186, www.kristar.com

filterra®
US PAT 6,277,274 AND 6,569,321

DRAWING NO.	REV	F-ECO	DATE
K-FTNW	03	0006 JPR 6/17/11	JPR 1/7/11

filterra
Bioretention Systems

Table 1: Filterra® Quick Sizing Table
(Western Zone - 0.2 in/hr Uniform Intensity Approach)

Available Filterra® Box Sizes (feet)	Recommended Commercial Contributing Drainage Area (acres) where C = 0.85	Outlet Pipe
4x6.5 or 6.5x4	up to 0.35	4" SDR-35 PVC
4x8 or 8x4	0.36 to 0.44	4" SDR-35 PVC
Standard 6x6	0.45 to 0.49	4" SDR-35 PVC
6x8 or 8x6	0.50 to .65	4" SDR-35 PVC
6x10 or 10x6	0.66 to 0.82	6" SDR-35 PVC
6x12 or 12x6	0.83 to 0.98	6" SDR-35 PVC

Available Filterra® Box Sizes (feet)	Recommended Residential Contributing Drainage Area (acres) where C = 0.50	Outlet Pipe
4x6.5 or 6.5x4	up to 0.60	4" SDR-35 PVC
4x8 or 8x4	0.61 to 0.74	4" SDR-35 PVC
Standard 6x6	0.75 to 0.83	4" SDR-35 PVC
6x8 or 8x6	0.84 to 1.11	4" SDR-35 PVC
6x10 or 10x6	1.12 to 1.39	6" SDR-35 PVC
6x12 or 12x6	1.40 to 1.67	6" SDR-35 PVC

Notes:

1. All boxes are a standard 3.5 feet depth (INV to TC)
2. A standard SDR-35 PVC pipe coupling is cast into the wall for easy connection to discharge drain
3. Dimensions shown are internal. Please add 1' to each external (using 6" walls)
4. In line with TR55 data, for Commercial Developments a minimum (runoff coefficient) C factor of 0.85 is recommended. For Residential Developments, use of C factors less than 0.5 require individual site review by Filterra.
5. Please ask for Sizing Tables for other target treatment goals, e.g. 0.3 in/hr
6. This sizing table is valid only for CA, NV, AZ, OR, ID, AK & HI

UF-MH-0001

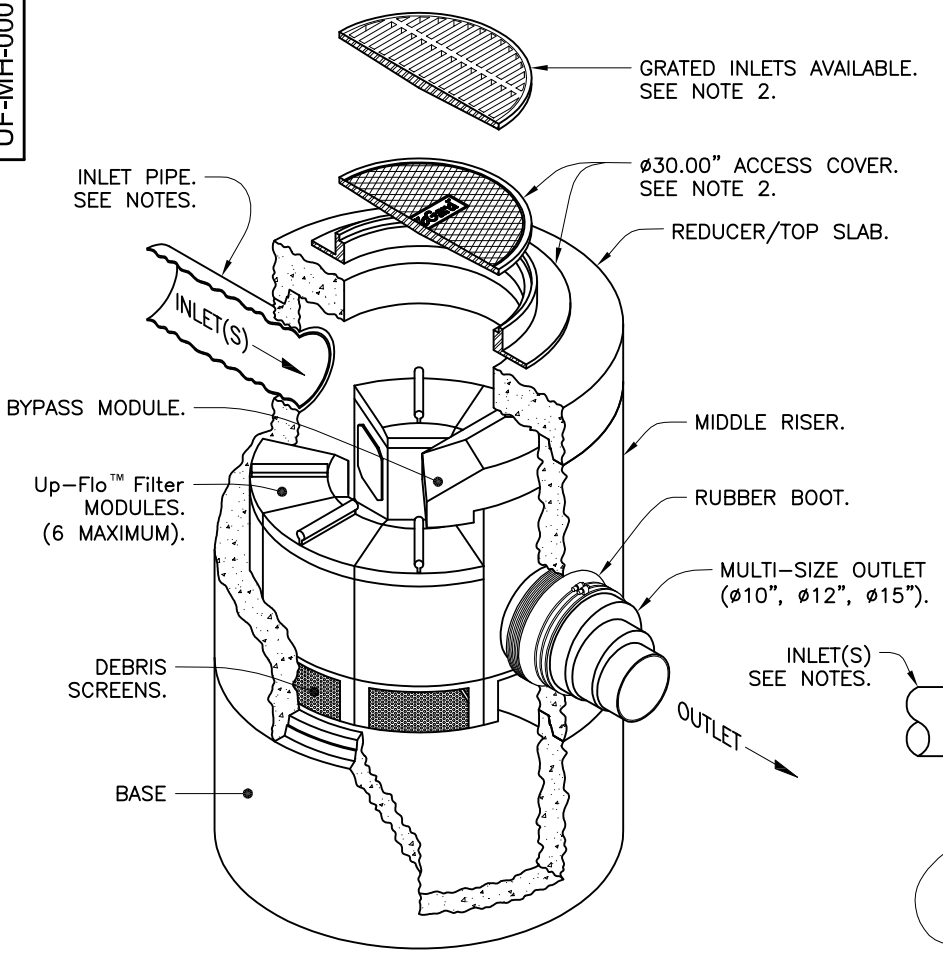

MODEL NUMBER	TREATMENT FLOW RATE for CPZ MEDIA	
	GPM	CFS
CF-48UF-1	25	0.056
CF-48UF-2	50	0.110
CF-48UF-3	75	0.167
CF-48UF-4	100	0.223
CF-48UF-5	125	0.279
CF-48UF-6	150	0.334
BYPASS FLOW RATE: 5-7 CFS		

Up-Flo™ Filter is manufactured under license agreement with Hydro International.

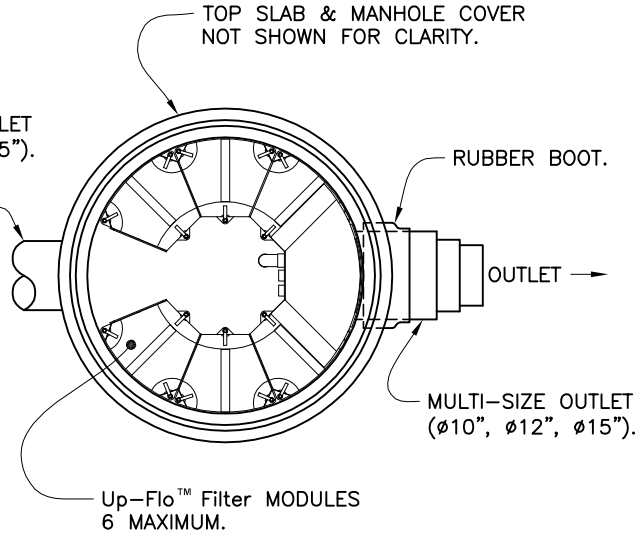

NOTES:

1. Precast concrete structure shall be manufactured in accordance with ASTM Designation C478.
2. Cast iron access cover assemblies shall be bolted with gasket. Custom size covers & inlet grates available per customer requirement.
3. For structure dimensions other than those shown, refer to custom structure drawing. Detail reflects design intent only. Refer to project specific drawings for actual dimensions.
4. Structure may be specified with extended base slab to allow for anti-floatation ballast. Contact Kristar Enterprises for additional information.
5. Inlet & outlet elevations, may differ by 0-3 feet. For invert elevation differences that exceed 3 feet contact Kristar Enterprises. Multiple inlets can be accomodated.
6. Custom systems are available for pipe orientations or sizes not shown. Contact Kristar Enterprises for engineering assistance.
7. Multi-size outlet is designed to accept PVC SDR-35 (Ø10", Ø12", & Ø15").

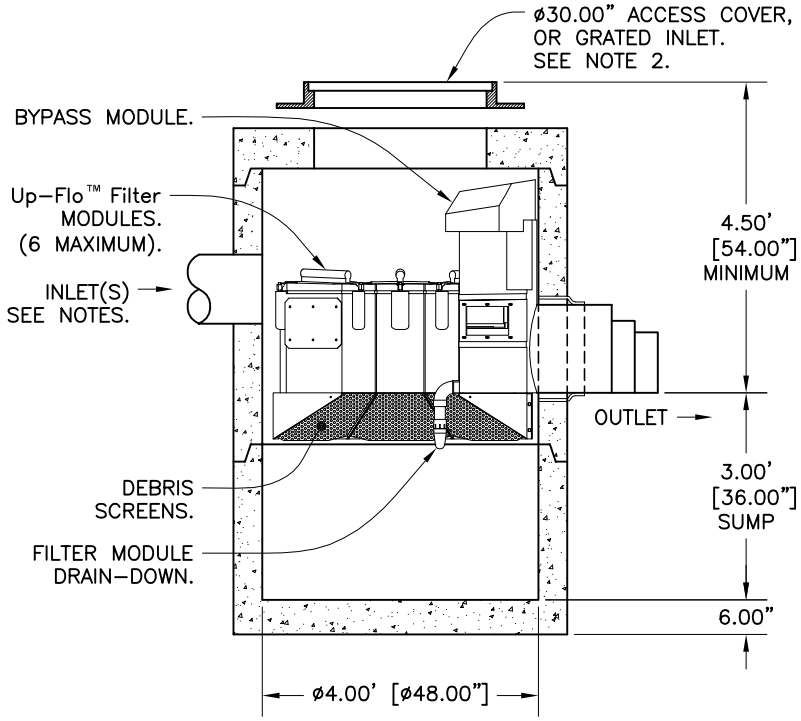

SECTION VIEW

TITLE

Up-Flo™ Filter

Ø48" MANHOLE CONFIGURATION
6 MODULE MAXIMUM

KriStar Enterprises, Inc.
360 Sutton Place, Santa Rosa, CA 95407
Ph: 800.579.8819, Fax: 707.524.8186, www.kristar.com

DRAWING NO.	REV	ECO	DATE	
UF-MH-0001	A	0059 JPR 12/30/08	JPR 4/28/08	SHEET 1 OF 1

APPENDIX B:

Conceptual Stormwater Control Plan

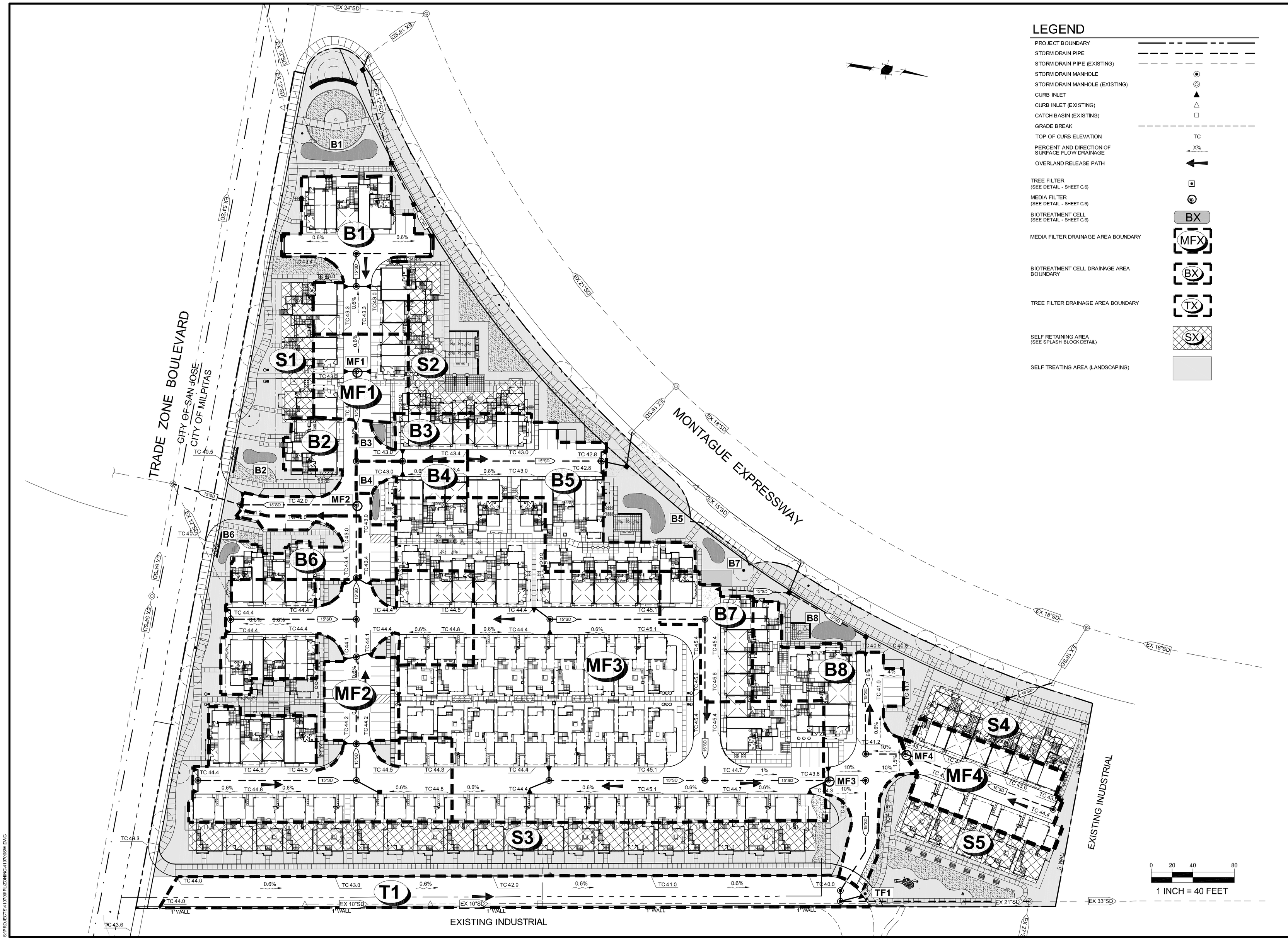

LEGEND

PROJECT BOUNDARY	
STORM DRAIN PIPE	
STORM DRAIN PIPE (EXISTING)	
STORM DRAIN MANHOLE	
STORM DRAIN MANHOLE (EXISTING)	
CURB INLET	
CURB INLET (EXISTING)	
CATCH BASIN (EXISTING)	
GRADE BREAK	
TOP OF CURB ELEVATION	TC
PERCENT AND DIRECTION OF SURFACE FLOW DRAINAGE	X%
OVERLAND RELEASE PATH	
TREE FILTER (SEE DETAIL - SHEET C.5)	
MEDIA FILTER (SEE DETAIL - SHEET C.5)	
BIOTREATMENT CELL (SEE DETAIL - SHEET C.5)	BX
MEDIA FILTER DRAINAGE AREA BOUNDARY	MFX
BIOTREATMENT CELL DRAINAGE AREA BOUNDARY	BX
TREE FILTER DRAINAGE AREA BOUNDARY	TX
SELF RETAINING AREA (SEE SPLASH BLOCK DETAIL)	SX
SELF TREATING AREA (LANDSCAPING)	

HMH
Land Use Entitlements
Land Planning
Landscape Architecture
Civil Engineering
Utility Design
Land Surveying
Stormwater Compliance
1570 Oakland Road
San Jose, CA 95131
(408) 487-2200
HMHca.com

Trumark Companies
4185 BLACKHAWK PLAZA CIRCLE, SUITE 200
DANVILLE, CA 94506

SITE DEVELOPMENT PERMIT
SD11-0012
CONTOUR
TRUMARK COMPANIES

NO	DATE	DESCRIPTION
3		
2		
1		
4	10/5/2011	PER CITY COMMENTS
3	9/23/2011	PER CITY COMMENTS

PROJECT NO:	4107.00
CAD DWG FILE:	410700SW.DWG
DESIGNED BY:	ML
DRAWN BY:	ML
CHECKED BY:	RTH
DATE:	8/16/2011
SCALE:	1" = 40'

© HMH

CONCEPTUAL STORM WATER CONTROL PLAN

C.5

S:\PROJECTS\410700\PLZ\DWG\410700SW.DWG

PLOTTED: 10/4/2011 12:13 PM

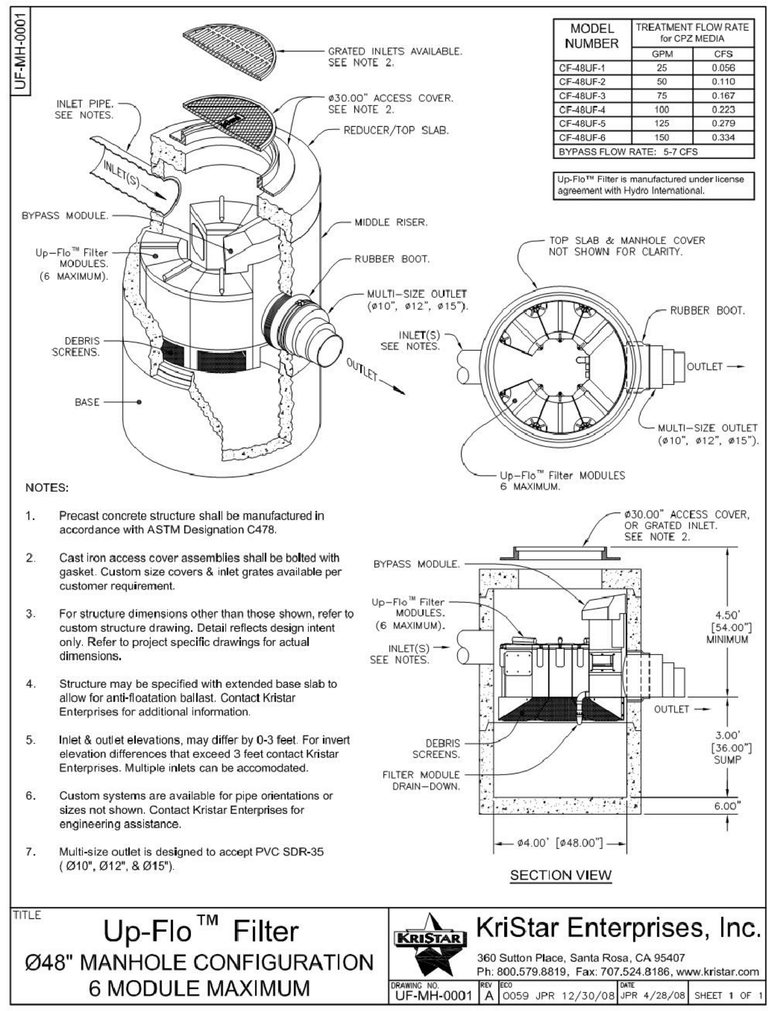

MODEL NUMBER	TREATMENT FLOW RATE for CPZ MEDIA	
	GPM	CFS
CF-48UF-1	25	0.056
CF-48UF-2	50	0.110
CF-48UF-3	75	0.167
CF-48UF-4	100	0.223
CF-48UF-5	125	0.279
CF-48UF-6	150	0.334
BYPASS FLOW RATE: 5-7 CFS		

Up-Flo™ Filter is manufactured under license agreement with Hydro International.

NOTES:

1. Precast concrete structure shall be manufactured in accordance with ASTM Designation C478.
2. Cast iron access cover assemblies shall be bolted with gasket. Custom size covers & inlet grates available per customer requirement.
3. For structure dimensions other than those shown, refer to custom structure drawing. Detail reflects design intent only. Refer to project specific drawings for actual dimensions.
4. Structure may be specified with extended base slab to allow for anti-floatation ballast. Contact Kristar Enterprises for additional information.
5. Inlet & outlet elevations, may differ by 0-3 feet. For invert elevation differences that exceed 3 feet contact Kristar Enterprises. Multiple inlets can be accomodated.
6. Custom systems are available for pipe orientations or sizes not shown. Contact Kristar Enterprises for engineering assistance.
7. Multi-size outlet is designed to accept PVC SDR-35 (Ø10", Ø12", & Ø15").

TITLE

Up-Flo™ Filter
Ø48" MANHOLE CONFIGURATION
6 MODULE MAXIMUM

KriStar Enterprises, Inc.
360 Sutton Place, Santa Rosa, CA 95407
Ph: 800.579.8819, Fax: 707.524.8186, www.kristar.com

DRAWING NO. UF-MH-0001 | REV. A | DES. O059 JPR 12/30/08 | DATE JPR 4/28/08 | SHEET 1 OF 1

TYP MEDIA FILTER
SCALE: NTS

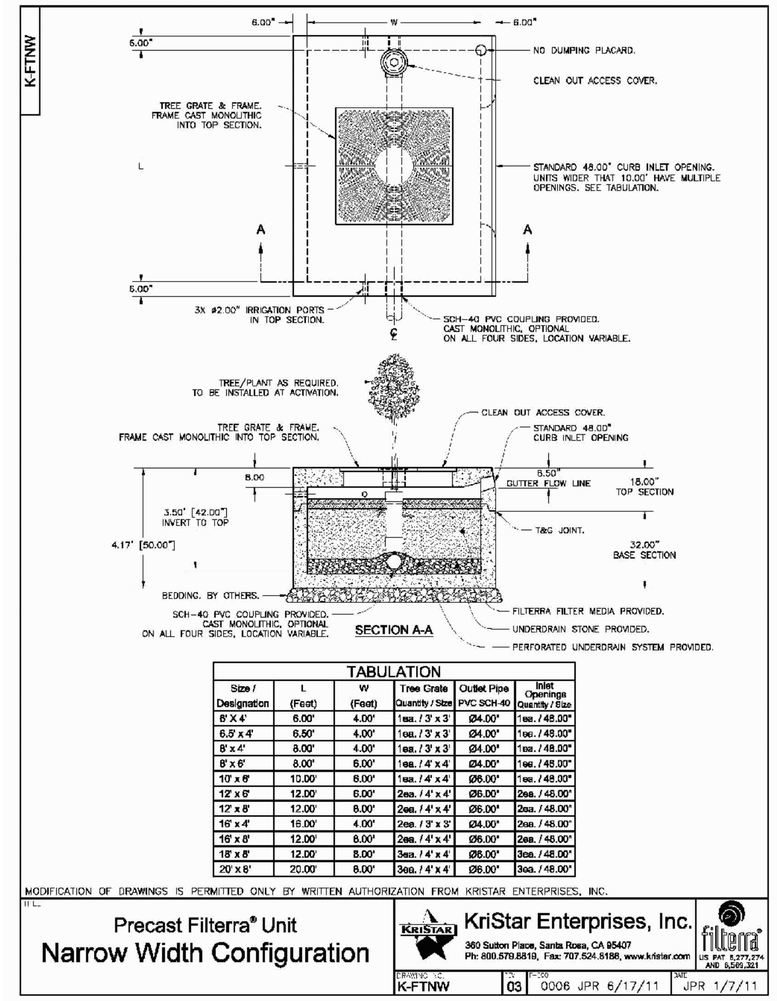

TABULATION

Size / Designation	L (Feet)	W (Feet)	Tree Grate Quantity / Size	Outlet Pipe PVC SCH-40	Inlet Openings Quantity / Size
8' X 4'	6.00'	4.00'	1ea. / 3' x 3'	Ø4.00"	1ea. / 48.00"
6.0' x 4'	6.00'	4.00'	1ea. / 3' x 3'	Ø4.00"	1ea. / 48.00"
8' x 4'	8.00'	4.00'	1ea. / 3' x 3'	Ø4.00"	1ea. / 48.00"
8' x 6'	8.00'	6.00'	1ea. / 4' x 4'	Ø4.00"	1ea. / 48.00"
10' x 6'	10.00'	6.00'	1ea. / 4' x 4'	Ø6.00"	1ea. / 48.00"
12' x 6'	12.00'	6.00'	2ea. / 4' x 4'	Ø6.00"	2ea. / 48.00"
12' x 8'	12.00'	8.00'	2ea. / 4' x 4'	Ø6.00"	2ea. / 48.00"
16' x 4'	16.00'	4.00'	2ea. / 3' x 3'	Ø4.00"	2ea. / 48.00"
16' x 8'	12.00'	8.00'	2ea. / 4' x 4'	Ø6.00"	2ea. / 48.00"
18' x 8'	12.00'	8.00'	3ea. / 4' x 4'	Ø6.00"	3ea. / 48.00"
20' x 8'	20.00'	8.00'	3ea. / 4' x 4'	Ø6.00"	3ea. / 48.00"

MODIFICATION OF DRAWINGS IS PERMITTED ONLY BY WRITTEN AUTHORIZATION FROM KRISTAR ENTERPRISES, INC.

TITLE

Precast Filterra® Unit
Narrow Width Configuration

KriStar Enterprises, Inc.
360 Sutton Place, Santa Rosa, CA 95407
Ph: 800.579.8819, Fax: 707.524.8186, www.kristar.com
US PAT 5,272,274 AND 5,695,352

DRAWING NO. K-FTNW | REV. 03 | DES. O006 JPR 6/17/11 | DATE JPR 1/7/11

TYP TREE FILTER
SCALE: NTS

filterra
Bioretention Systems

Table 1: Filterra® Quick Sizing Table
(Western Zone - 0.2 in/hr Uniform Intensity Approach)

Available Filterra® Box Sizes (feet)	Recommended Commercial Contributing Drainage Area (acres) where C = 0.85	Outlet Pipe
4x6.5 or 6.5x4	up to 0.35	4" SDR-35 PVC
4x8 or 8x4	0.36 to 0.44	4" SDR-35 PVC
Standard 6x6	0.45 to 0.48	4" SDR-35 PVC
6x8 or 8x6	0.50 to .65	4" SDR-35 PVC
6x10 or 10x6	0.66 to 0.82	6" SDR-35 PVC
6x12 or 12x6	0.83 to 0.98	6" SDR-35 PVC

Available Filterra® Box Sizes (feet)	Recommended Residential Contributing Drainage Area (acres) where C = 0.50	Outlet Pipe
4x6.5 or 6.5x4	up to 0.60	4" SDR-35 PVC
4x8 or 8x4	0.61 to 0.74	4" SDR-35 PVC
Standard 6x6	0.75 to 0.83	4" SDR-35 PVC
6x8 or 8x6	0.84 to 1.11	4" SDR-35 PVC
6x10 or 10x6	1.12 to 1.39	6" SDR-35 PVC
6x12 or 12x6	1.40 to 1.67	6" SDR-35 PVC

Notes:

1. All boxes are a standard 3.5 feet depth (INV to TC)
2. A standard SDR-35 PVC pipe coupling is cast into the wall for easy connection to discharge drain
3. Dimensions shown are internal. Please add 1' to each external (using 6" walls)
4. In line with TR55 data, for Commercial Developments a minimum (runoff coefficient) C factor of 0.85 is recommended. For Residential Developments, use of C factors less than 0.5 require individual site review by Filterra.
5. Please ask for Sizing Tables for other target treatment goals, e.g. 0.3 in/hr
6. This sizing table is valid only for CA, NV, AZ, OR, ID, AK & HI

2/5/08 www.filterra.com 11

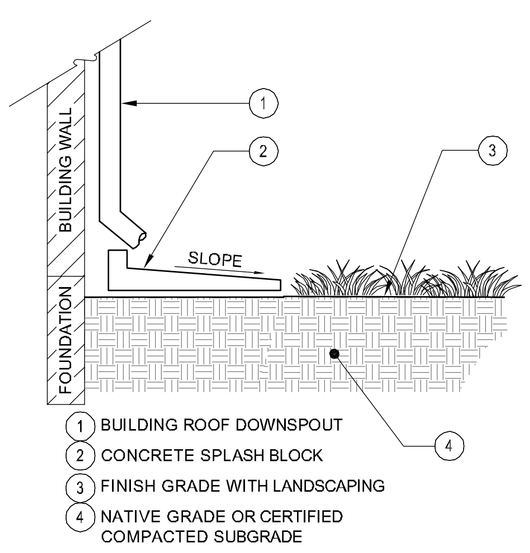

TYP SPLASH BLOCK
SCALE: NTS

NOTES:
1. SEE LANDSCAPE PLANS FOR PLANTING AND IRRIGATION.

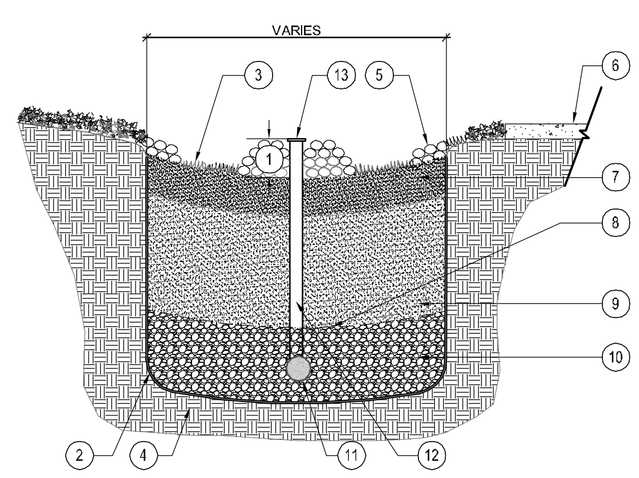

TYP BIOTREATMENT CELL
SCALE: NTS

1. PONDING DEPTH FROM INLET OPENING TO GRADE (MIN. 6" DEPTH)
2. IMPERMEABLE LINER (TYPICAL)
3. VEGETATION (SEE LANDSCAPE PLANS)
4. NATIVE GRADE OR CERTIFIED COMPACTED SUBGRADE
5. COBBLE STONE DISSIPATOR ALONG EDGE OF BIORETENTION CELL ADJACENT TO IMPERVIOUS SURFACE
6. IMPERVIOUS SURFACE, SEE PLAN FOR LOCATION AND TYPE
7. PLANTING SOIL MIX (MIN. 6" DEPTH)
8. FILTER FABRIC (TYPICAL)
9. SANDY LOAM WITH PERCOLATION RATE OF 5" TO 10" PER HOUR (MINIMUM 18" DEPTH). SHALL CONFORM TO THE SAN FRANCISCO BAY MUNICIPAL REGIONAL PERMIT-REQUIRED "MODEL BIORETENTION SOIL MEDIA SPECIFICATION" OR EQUIVALENT.
10. DRAIN ROCK (MIN. 12" DEPTH)
11. PERFORATED PVC SUBDRAIN PIPE WITH ATRIUM GRATE CLEANOUT AT EACH END
12. VERTICAL PVC CLEANOUT RISER
13. CLEANOUT

HMH
Land Use Entitlements
Land Planning
Landscape Architecture
Civil Engineering
Utility Design
Land Surveying
Stormwater Compliance
1570 Oakland Road San Jose, CA 95131
(408) 487-2200 HMHca.com

Trumark Companies
4185 BLACKHAWK PLAZA CIRCLE, SUITE 200
DANVILLE, CA 94506

SITE DEVELOPMENT PERMIT
SD11-0012
CONTOUR
TRUMARK COMPANIES

NO	DATE	DESCRIPTION
2	10/5/2011	PER CITY COMMENTS
1	9/23/2011	PER CITY COMMENTS

PROJECT NO:	4107.00
CAD DWG FILE:	410700SW.DWG
DESIGNED BY:	ML
DRAWN BY:	ML
CHECKED BY:	RTH
DATE:	8/18/2011
SCALE:	NOT TO SCALE

© HMH

CONCEPTUAL STORM WATER CONTROL DETAILS

C.6

S:\PROJECTS\410700\PLS\CNWNG\410700SW.DWG
PLOTTED: 10/4/2011 12:14 PM

APPENDIX C:

City of Milpitas C.3 Data Form

7. PROVISION C.3 DATA FORM

Which Projects Must Comply with Stormwater Requirements?

All projects creating, adding, or replacing 10,000 sq. ft.* or more of impervious surface on the project site must fill out this worksheet and submit it to **Milpitas Engineering Division** with the development project application. Interior remodeling projects, routine maintenance or repair projects such as re-roofing and re-paving, and single family homes that are not part of a larger plan of development are NOT required to complete this worksheet.

What is an Impervious Surface?

An impervious surface is a surface covering or pavement that prevents the land's natural ability to absorb and infiltrate rainfall/stormwater. Impervious surfaces include, but are not limited to rooftops, walkways, paved patios, driveways, parking lots, storage areas, impervious concrete and asphalt, and any other continuous watertight pavement or covering. Pervious pavement, underlain with pervious soil or pervious storage material (e.g., drain rock), that infiltrates rainfall at a rate equal to or greater than surrounding unpaved areas OR that stores and infiltrates the water quality design volume specified in Provision C.3.d of the Municipal Regional Stormwater Permit (MRP), is not considered an impervious surface.

For More Information

For more information regarding selection of Best Management Practices for stormwater pollution

** **Note**: The threshold will be reduced to 5,000 sq. ft. for restaurants, uncovered parking lots, auto service facilities and retail gasoline outlets that receive final discretionary approval on or after December 1, 2011.*

1. Project Information

Project Name: *Contour* **APN #** *086-36-043*

Project Address: *300, 324-368 Montague Expressway*

Cross Streets: *Trade Zone Boulevard*

Applicant/Developer Name: *Trumark Companies, 4185 Blackhawk Plaza Circle, Suite 200, Danville, CA 94056; (925) 648-8300*

Project Phase(s): *1* **of** *1* **Engineer:** *HMH, 1570 Oakland Rd., San Jose, CA 95131; (408) 487-2200*

Project Type (Check all that apply):

X Residential ☐ Commercial ☐ Industrial ☐ Mixed Use ☐ Public ☐ Institutional

☐ Restaurant ☐ Uncovered Parking ☐ Auto Service ☐ Retail Gas Outlet

☐ Other _____ _____

Project Description: *92 single-family attached and 42 single-family detached residential units.*

Project Watershed/Receiving Water: *Coyote Creek*

2. Project Size:

a. Total site area	*9.2* acres
b. Estimated area of land disturbance during construction (including clearing, grading, or excavating).	*9.2* acres
c. Existing (pre-project) impervious surface area	*355,470* sq. ft.
d. Existing impervious surface area replaced as part of project	*289,210* sq. ft.
e. New impervious surface area created/added as part of project	*0* sq. ft.
f. Total new and replaced impervious surface area (d + e)	*289,210* sq. ft.
g. Total post-project impervious surface area (c + e)	*289,210* sq. ft.
h. Percent increase/replacement of impervious surface area (f ÷ c × 100) (For redevelopment projects only)	*-18.6* %

3. MRP Provision C.3. and State Construction General Permit Applicability:

a. Is #2.f. equal to 10,000 sq. ft. or more?

X Yes, C.3. source control, site design and treatment requirements apply

☐ No, C.3. source control and site design requirements may apply – check with local agency

b. Is #2.h. equal to 50% or more?

X Yes, C.3. requirements (site design and source control, as appropriate, and stormwater treatment) apply to entire site

☐ No, C.3. requirements only apply to impervious area created or replaced

c. Is #2.b. equal to 1 acre or more?

X Yes, applicant must obtain coverage under the State Construction General Permit (i.e., file a Notice of Intent and prepare a Stormwater Pollution Prevention Plan) (see www.swrcb.ca.gov/water_issues/programs/stormwater/construction.shtml for details).

☐ No, applicant does not need coverage under the State Construction General Permit.

4. Types of Stormwater Controls Used (check all that apply, using lists on next page):

X Source Controls X Site Design Measures X Treatment Systems

5. Hydromodification Management (HM) Applicability:

a. Does project create and/or replace one acre or more of impervious surface AND create an increase in total impervious surface from the pre-project condition (i.e., is 2.g. > 2.c.)?

☐ Yes (continue) X No – exempt from HM, go to page 3

b. Is the project located in an area of HM applicability (green or pink area) on the HM Applicability Map? (www.scvurppp-w2k.com/hmp_maps.htm)

☐ Yes, project must implement HM requirements

X No, project is exempt from HM requirements

Specific Stormwater Control Measures:

Source Controls

- ❑ Alternative building materials
- ❑ Wash area/racks, drain to sanitary sewer[2]
- X Covered dumpster area, drain to sanitary sewer[2]
- ❑ Sanitary sewer connection or accessible cleanout for swimming pool/spa/fountain[1]
- X Beneficial landscaping (minimizes irrigation, runoff, pesticides and fertilizers; promotes treatment)
- ❑ Outdoor material storage protection
- ❑ Covers, drains for loading docks, maintenance bays, fueling areas
- X Maintenance (pavement sweeping, catch basin cleaning, good housekeeping)
- X Storm drain labeling
- ❑ Other _____

Site Design Measures

- ❑ Minimum land disturbance
- ❑ Minimized impervious surfaces
- ❑ Minimum-impact street design
- ❑ Minimum-impact parking lot design
- X Cluster structures/ pavement
- ❑ Permeable pavement
- ❑ Alternative driveway design
- X Roof downspouts drain to landscaping
- X Microdetention in landscape
- ❑ Rainwater harvesting and reuse (e.g., rain barrel, cistern connected to roof drains)
- ❑ Preserved open space: _____ ac. or sq. ft .(circle one)
- ❑ Protected riparian and wetland areas, riparian buffers (Setback from top of bank: _____ft.)
- ❑ Other _____

Treatment Systems[2]

LID Treatment

- ❑ Infiltrating vegetated swale
- ❑ Vegetated filter strip
- X Bioretention area
- ❑ Flow-through planter
- ❑ Green roof
- ❑ Infiltration trench/basin
- ❑ Underground detention and infiltration system (e.g. pervious pavement drain rock, large diameter conduit)
- ❑ Retention/irrigation
- ❑ Other: *Tree Filter*

Other Treatment Methods

- ❑ Flow-through vegetated swale (no infiltration)
- ❑ Dry detention basin
- ❑ Wet pond
- X Media filter (sand, compost, or manufactured media)

Hydrodynamic separator[3]

- ❑ Water quality inlet filter[3]
- ❑ Other _____

Flow Duration Controls for Hydromodification Management (HM)

- ❑ Detention basin
- ❑ Underground tank or vault
- ❑ Bioretention with outlet control
- ❑ Other _____

[1] Subject to sanitary sewer authority requirements.
[2] Stormwater treatment is currently required for all projects that create and/or replace 10,000 square feet or more of impervious surface (#2.f. > 10,000 sf). Low Impact Development (LID) treatment methods are strongly encouraged, and will be required for projects that receive final discretionary approval on or after 12/1/11, except in special cases.
[3] Only allowed as part of a multi-step treatment process.

6. Treatment System Sizing for Projects with Treatment Requirements

Indicate the hydraulic sizing criteria used and provide the calculated design flow or volume:

Treatment System Component	Hydraulic Sizing Criteria Used[3]	Design Flow or Volume (cfs or cu.ft.)
Bioretention	*3*	*.034 sizing factor*
Media Filter	*2b.*	*.04 - .021 cfs*
Tree Filter	*.65 ac drainage area, per manufacturer*	*N/A*

[3]Key: 1a: Volume – WEF Method
1b: Volume – CASQA BMP Handbook Method
2a: Flow – Factored Flood Flow Method
2b: Flow – CASQA BMP Handbook Method
2c: Flow – Uniform Intensity Method
3: Combination Flow and Volume Design Basis

7. Alternative Certification: Was the treatment system sizing and design reviewed by a qualified professional that is not a member of the agency staff?

X Yes ☐ No Name of Reviewer: *Mike Campbell, CPSWQ*

8. Operation & Maintenance Information

A. Property Owner's Name *Trumark Companies*
B. Responsible Party for Stormwater Treatment/Hydromodification Control O&M:
   a. Name: *Trumark Companies*
   b. Address: *4185 Blackhawk Plaza Circle, Suite 200, Danville, CA 94056*
   c. Phone/E-mail: *(925) 648-8300*

This section to be completed by Municipal staff.

O&M Responsibility Mechanism

Indicate how responsibility for O&M is assured. Check all that apply:

☐ O&M Agreement

☐ Other mechanism that assigns responsibility (describe below):

_____

_____

Reviewed:

Community Development Department

Planning Division: _____

Building Division: _____

Return form to: _____

Public Works Department

Engineering: _____

Other (Specify): _____

Data entry performed by: _____