AGENDA ITEM: VIII-1

MILPITAS PLANNING COMMISSION AGENDA REPORT

PUBLIC HEARING Meeting Date: February 22, 2012

APPLICATION:	**CONDITIONAL USE PERMIT NO. UP12-0001, JU JITSU MARTIAL ARTS STUDIO**
APPLICATION SUMMARY:	A request to operate a 972 square foot martial arts studio within the Seasons Marketplace shopping center.
LOCATION:	1535 Landess Avenue #104 (88-35-017)
APPLICANT:	Michael Javier, 85 Rio Robles East. Apt. 1101, San Jose, Ca 95134
OWNER:	Dinna Bayangos, AY-GB Milpitas LLC, 1535 Landess Avenue, Milpitas, CA 95035
RECOMMENDATION:	**Staff recommends that the Planning Commission: Adopt Resolution No. 12-009 approving the conditional use permit subject to the conditions of approval.**
PROJECT DATA:	
General Plan/ Zoning Designation:	General Commercial (GNC)/General Commercial (C2)
Overlay	Site and Architectural Overlay (-S)
CEQA Determination:	Categorically exempt pursuant to Section 15301 for "Existing Facilities" of the California Environmental Quality Act
PLANNER:	Cindy Hom, Assistant Planner
PJ:	2796
ATTACHMENTS:	A. Resolution No. 12-009/Conditions of Approval B. Project Plans C. Project Description

LOCATION MAP

N

No scale

BACKGROUND

On January 9, 2012, Michael Javier submitted a conditional use permit application to operate a new 972 square foot Ju Jitsu martial arts studio within an existing shopping center. The application is submitted pursuant to Milpitas Municipal Code XI-10-5.02-1 (7) (Group Instruction).

PROJECT DESCRIPTION

The project site is situated on a 7.89-acre parcel located at the northeast corner of the Dempsey Road and Landess Avenue intersection. The site is developed as a 76,894 square foot indoor shopping mall consisting of a 34,321 square foot food store, restaurants, and various retail uses. The site is zoned General Commercial with a Site and Architectural Overlay (C2-S). Neighboring land uses include the Stonegate Development PUD (89 single-family homes) and the French Court PUD (20 single-family homes) both located north of the project site. Commercial retail buildings are located to the west, south and east. A vicinity map of the project site is shown on the previous page

The project is an existing martial arts studio that offers private instruction. The applicant would like to upgrade the facility to offer group instruction. No spectator events are proposed at this facility. As such, staff recommends as a condition of approval that prohibits any spectator events at this location. The proposed martial arts studio would operate Monday through Friday from 4:00pm to 9:00pm, on Saturdays from 8:00am to 12:00pm, and closed on Sundays. They will also offer a summer program, which would operate from 10:00am to 2:00pm five days a week in addition to the regular studio hours. The proposed martial arts studio will be provide both youth and adult instruction. Youth classes will consist of 45 minute sessions, while adult classes will be between one to two hours. The facility would anticipate between 20-25 twenty students at any given time.

Floor Plan

The applicant is proposed an open floor plan. The proposed martial art studio consists of floor and wall mats. No other equipment or modifications are proposed with this application.

Parking

The project complies with the Milpitas Parking Ordinance for instructional studios in that required parking is satisfied with the existing on-site parking as demonstrated in Table 1 below.

Table 1
Parking Requirements

Uses	Area	Ratio	Parking
Proposed Ju Jitsu	972	1/150	6
Manila Tae Kwon Do	1,104	1/150 s. f.	7
Milpitas Boxing	1883	1/150	13
Retail	17,529	1/200 s. f.	18
Food Store	34,321	1/200 s. f.	172
Restaurant			

Uses	Area	Ratio	Parking
Dining Area	3,688	1/39 s. f.	95
Seats	232	1/2.5 seats	93
Take Out	1,566	1/60 s. f.	26
Total number of parking spaces required			**493**
Total number of spaces provided			**519**

ADOPTED PLANS AND ORDINANCES CONSISTENCY

General Plan

The table below outlines the project's consistency with applicable General Plan Guiding Principles and Implementing Policies:

Table 2
General Plan Consistency

Policy	Consistency Finding
2.a-I-5: Maintain policies that promote a strong economy which provides economic opportunities for all Milpitas residents within existing environmental, social, fiscal, and land use constraints.	**Consistent.** The proposed a new martial arts facility would provide a new business to the city and adds to economic vitality of the Seasons Marketplace.

Zoning Ordinance

The proposed martial arts studio is consistent with the Zoning Ordinance in that the use is a conditionally permitted use (Group Instruction) and complies with the development standards for the General Commercial zone and parking requirements (instructional studios).

The proposed use will not be detrimental or injurious to the property or the public health, safety, and general welfare in that the use will occupy an existing tenant space and will not generate any objectionable noise, odors, or create any safety hazards.

ENVIRONMENTAL REVIEW

The Planning Division conducted an initial environmental assessment of the project in accordance with the California Environmental Quality Act (CEQA). Staff determined that the project is categorically exempt from further environmental review pursuant to Section 15301 for "Existing Facilities" in that the use is locating within an existing tenant space within a shopping center and will require only minor interior alterations.

PUBLIC COMMENT/OUTREACH

Staff publicly noticed the application in accordance with City and State law. As of the time of writing this report, there have been no inquiries from the public.

CONCLUSION

The martial arts studio is a conditionally permitted use and is consistent with both the General Plan and Zoning Ordinance. The studio promotes new business, employment opportunities; add to the economic vitality of the Seasons Marketplace shopping center.

RECOMMENDATION

STAFF RECOMMENDS THAT the Planning Commission adopt Resolution No. 12-009 for permit UP12-0001, subject to the attached Resolution and Conditions of Approval.

Attachments:

A. Resolution No. 12-009
B. Project Plans
C. Project Description

ATTACHMENT A

RESOLUTION NO. 12-009

A RESOLUTION OF THE PLANNING COMMISSION OF THE CITY OF MILPITAS, CALIFORNIA, APPROVING CONDITIONAL USE PERMIT NO. UP12-0001, TO ALLOW THE OPERATION OF A 972 SQUARE FOOT JU JITSU MARTIAL ARTS STUDIO, LOCATED AT 1535 LANDESS AVE.

WHEREAS, on January 9, 2012, an application was submitted by Michael Javier, 85 Rio Robles East, Apt. 1101, San Jose, CA 95134, to allow the operation of a 972 square foot martial arts studio within the Seasons Marketplace shopping center. The property is located at 1535 Landess Avenue (88-35-017), zoned General Commercial Zoning District with Site and Architectural Review Overlay District (C2-S); and

WHEREAS, the Planning Division completed an environmental assessment for the project in accordance with the California Environmental Quality Act (CEQA), and recommends that the Planning Commission determine this project exempt; and

WHEREAS, on February 22, 2012, the Planning Commission held a duly noticed public hearing on the subject application, and considered evidence presented by City staff, the applicant, and other interested parties.

NOW THEREFORE, the Planning Commission of the City of Milpitas hereby finds, determines and resolves as follows:

Section 1: The recitals set forth above are true and correct and incorporated herein by reference.

Section 2: The project is categorically exempt from further environmental review pursuant to Section 15301 for "Existing Facilities" in that the project proposes a martial art studio that entails minor interior tenant improvements within an existing commercial tenant space within a shopping center.

Section 3: The new martial arts studio is consistent with the General Plan Policy 2.a-I-5 in that it is an economic opportunity for a new business to locate in the city and adds to the economic vitality of the Seasons Marketplace shopping center.

Section 4: The proposed martial arts studio is consistent with the Zoning Ordinance in that the use is a conditionally permitted and will not be detrimental or injurious to the property or the public health, safety, and general welfare.

Section 5: The Planning Commission of the City of Milpitas hereby approves Conditional Use Permit No. UP12-0001 subject to the above Findings, and Conditions of Approval attached hereto as Exhibit 1.

PASSED AND ADOPTED at a regular meeting of the Planning Commission of the City of Milpitas on February 22, 2012.

_____
Chair

TO WIT:

I HEREBY CERTIFY that the following resolution was duly adopted at a regular meeting of the Planning Commission of the City of Milpitas on February 22, 2012 and carried by the following roll call vote:

COMMISSIONER	AYES	NOES	ABSENT	ABSTAIN
Lawrence Ciardella				
John Luk				
Rajeev Madnawat				
Sudhir Mandal				
Zeya Mohsin				
Gurdev Sandhu				
Steve Tao				
Garry Barbadillo				

EXHIBIT 1

CONDITIONS OF APPROVAL
CONDITIONAL USE PERMIT NO. UP12-0001
A request to operate a 1,104 square foot martial arts studio within an existing commercial building.
1535 Landess Avenue (88-35-017)

General Conditions

1. The owner or designee shall develop the approved project in conformance with the approved plans and color and materials sample boards approved by the Planning Commission on February 22, 2012, in accordance with these Conditions of Approval.

   Any deviation from the approved site plan, floor plans, elevations, materials, colors, landscape plan, or other approved submittal shall require that, prior to the issuance of building permits, the owner or designee shall submit modified plans and any other applicable materials as required by the City for review and obtain the approval of the Planning Director or Designee. If the Planning Director or designee determines that the deviation is significant, the owner or designee shall be required to apply for review and obtain approval of the Planning Commission, in accordance with the Zoning Ordinance. **(P)**

   Conditional Use Permit No. UP12-0001 shall become null and void if the project is not commenced within two (2) years from the date of approval unless in conjunction with a tentative map, then the project life coincides with the life of the map. Pursuant to Section 64.06(B) of the Zoning Ordinance of the City of Milpitas, commencement shall be:

   a. Completes a foundation associated with the project; or
   b. Dedicates any land or easement as required from the zoning action; or
   c. Complies with all legal requirements necessary to commence the use, or obtains an occupancy permit, whichever is sooner.

2. Pursuant to Section 64.06(1), the owner or designee shall have the right to request an extension of Conditional Use Permit No. UP12-0001 if said request is made, filed and approved by the Planning Commission prior to expiration dates set forth herein. **(P)**

3. The use shall be operated in accordance with all local, state, and federal regulations.

4. Private Job Account - If at the time of application for building permit there is a project job account balance due to the City for recovery of review fees, review of permits will not be initiated until the balance is paid in full. (P)

5. No spectator events are allowed in conjunction with the martial arts studio.

(P) = Planning

ATTACHMENT B

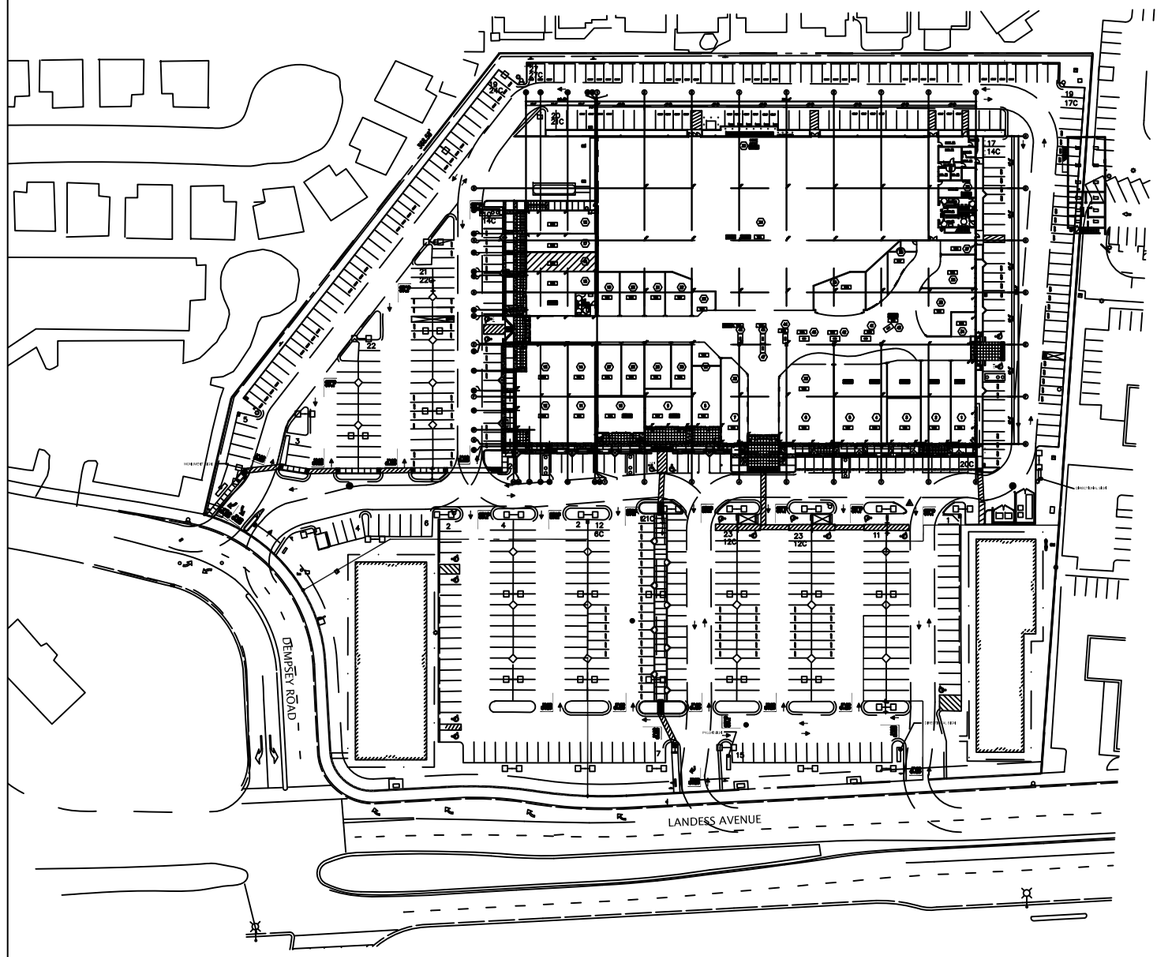

SITE PLAN

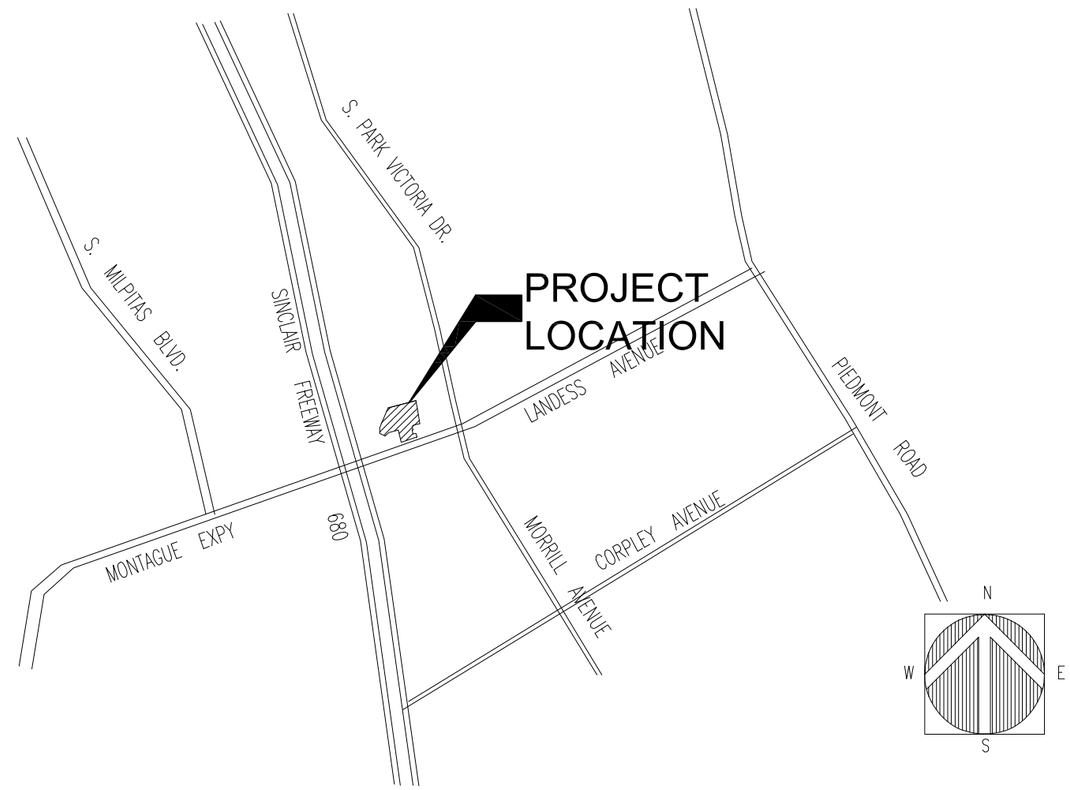

VICINITY MAP

SEASONS
MarketPlace at Landess

Ju Jitsu Martial Arts Studio
SUITE 104

SEASONS MARKET PLACE @ LANDESS
1535 LANDESS AVENUE, MILPITAS, CA 95035

AYALAFIL (US) CO., INC.
1065 E. Hillsdale Blvd.
SUITE 105
FOSTER CITY, CALIFORNIA 94404
T. 650.288.3930, F. 650.288.3916/3917
DEVELOPER

RESTAURANT AND FOOD USE PARKING REQUIREMENT SUMMARY

PARKING RATIO:	DINING AREA: 1/39 SF
	TAKE OUT: 1/60 SF
	SEATS: 1/2.5

UNIT	BUSINESS	RESTAURANT TYPE	FLOOR AREA	DINING AREA	# OF SEATS	TAKE OUT	PARKING REQUIRED
122	BEARD PAPA	TAKE-OUT	395			60	1
139	MAX'S OF MANILA	SIT DOWN	3,427	1,476		180	41
141	COFFEE ADVENTURE	FAST FOOD	960		28	118	13
143	KOREA GARDEN	SIT DOWN	1,840	725			18
147	**KOPITIAM CAFÉ***	**SIT DOWN**	**1,300**	**649**			**17**
151	SUBWAY	FAST FOOD	1,275	623			16
155	GOLDILOCKS	FAST FOOD	3,343		86	182	37
157	CHOWKING	FAST FOOD	2,023		59	293	29
159	TOKYO-TOKYO	FAST FOOD	1,765		59	291	28
162	CHEF P'S	TAKE-OUT	1,100	215		107	7
163	FILIPINO DESSERTS	TAKE-OUT	1,229			112	2
165	VALERIO'S BAKERY	TAKE-OUT	1,500			223	4
	TOTAL		**20,156**	**3,688**	**232**	**1,566**	**213**

*-BASED ON TENTATIVE LAY-OUTS

**-BASED ON PREVIOUS TENANT

PARKING ANALYSIS

AREA OF BUILDING	USE	AREA	RATIO	CARS
PROPOSED STUDIO	ASSEMBLY	779	1/150	**5**
JUI JIT SU STUDIO	ASSEMBLY	972	1/150	**6**
MLA TAE KWON DO 2	ASSEMBLY	1,104	1/150	**7**
BOXING	ASSEMBLY	1,883	1/150	**13**
RETAIL	RETAIL	16,750	1/200	**84**
FOOD MARKET	RETAIL	34,321	1/200	**172**
RESTAURANT AND FOOD USE	GROSS FLR AREA	20,157		
	DINING AREA	3,688	1/39	**95**
	SEATS	232	1/2.5	**93**
	TAKE OUT	1,566	1/60	**26**
TOTAL NUMBER OF PARKING REQUIRED				**500**
TOTAL PARKING PROVIDED				**519**

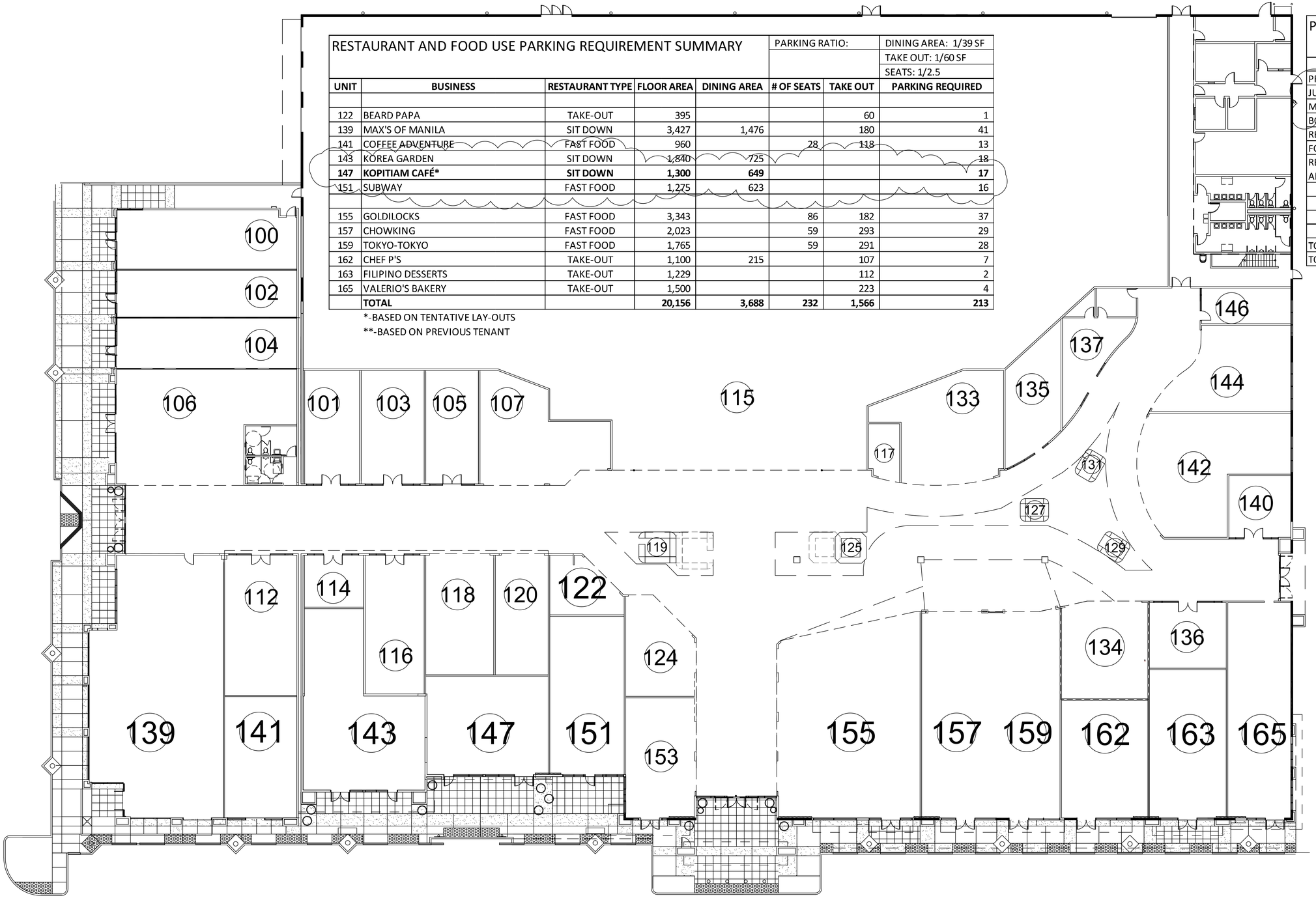

AYALAFIL (US) CO., INC.
1065 E. Hillsdale Blvd.
SUITE 105
FOSTER CITY, CALIFORNIA 94404
T. 650.288.3930, F. 650.288.3916/3917
DEVELOPER

NOTE:

SEASONS MARKET PLACE @ LANDESS

REVISED: January, 2012

Project Name: JU JITSU MARTIAL ARTS STUDIO

Suite 104

1535 LANDESS AVENUE, MILPITAS, CA 95035

MILPITAS, CALIFORNIA

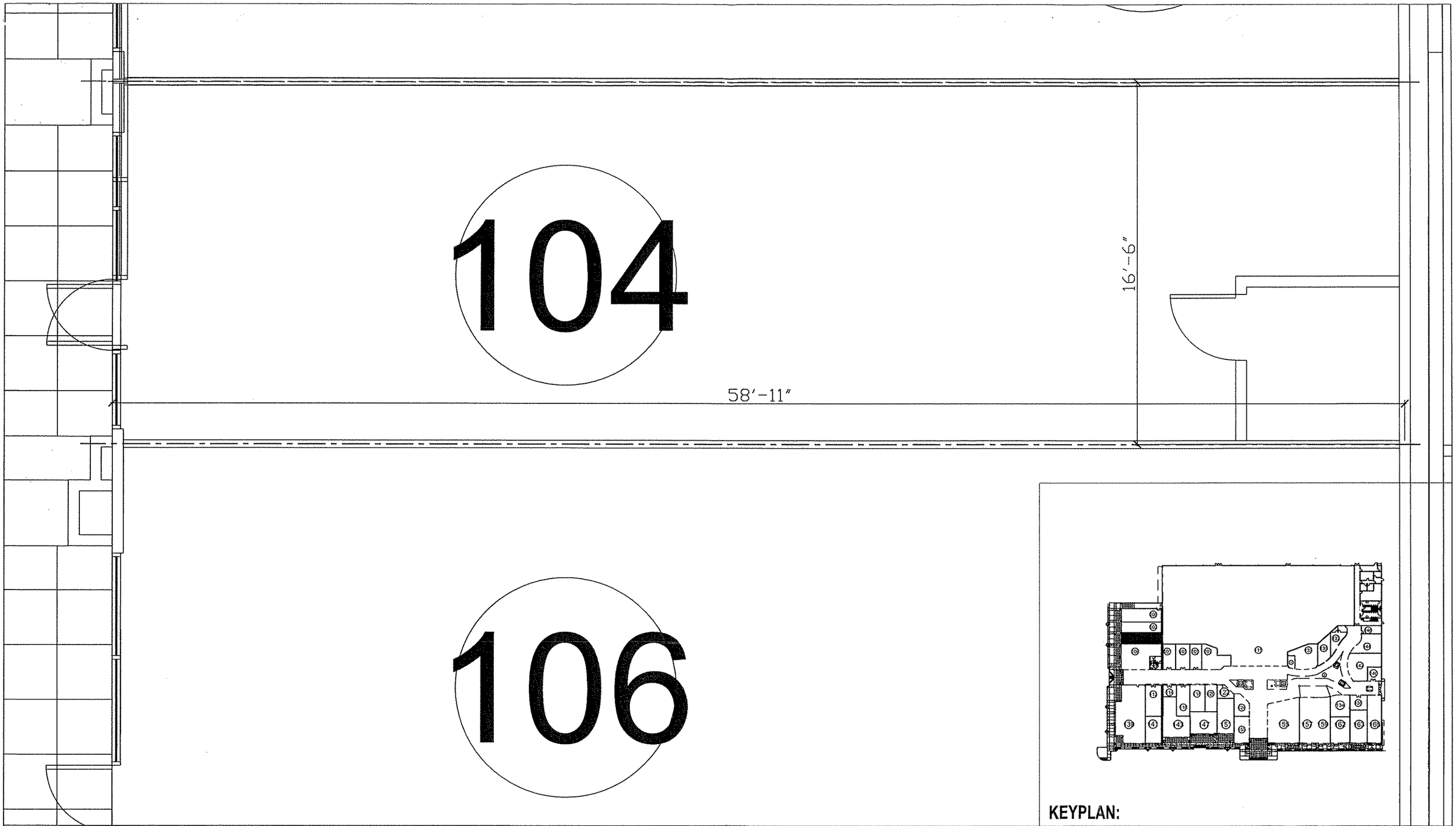

KEYPLAN:

SEASONS
MarketPlace at Landess

SUITE 104
Scale: 1/4" = 1'-0"
SEASONS MARKET PLACE @ LANDESS
1535 LANDESS AVENUE, MILPITAS, CA 95035

AYALAFIL (US) CO., INC.
1065 E. Hillsdale Blvd.
SUITE 105
FOSTER CITY, CALIFORNIA 94404
T. 650.288.3930, F. 650.288.3916/3917

DEVELOPER

JAN 9, 2012

ATTACHMENT C

TO MILPITAS PLANNING DIVISION,

I, MICHAEL JAVIER, IS REQUESTING FOR A C.U.P. FOR 1535 LANDESS AVE. UNIT 104, MILPITAS. THE UNIT WILL BE USED FOR A JIU-JITSU MARTIAL ARTS STUDIO. THERE ARE NO MAJOR IMPROVEMENTS IN THE UNIT. THE ONLY IMPROVEMENT DONE IS PUTTING FLOOR PADS FOR SAFETY. FIRE DEPARTMENT AND CITY BUILDING INSPECTOR HAS COMPLETELY SIGNED OFF ALREADY. IF YOU ANY ADDITIONAL QUESTIONS, I CAN BE REACHED BY EMAIL OR BY PHONE AT miko_javier@hotmail.com / (408) 888-7133.

SINCERELY,

MICHAEL JAVIER

MJavier