USA NORTH
OF CENTRAL/NORTHERN CALIFORNIA AND NEVADA

DIAL TOLL FREE
1-800-227-2600

AT LEAST TWO WORKING DAYS BEFORE YOU DIG

at&t

THOMAS RUSSELL SCHOOL JOINT USE PARK
CNU3828
1585 ROGER STREET
MILPITAS, CA 95035

A/E DOCUMENT REVIEW STATUS						
Status Code						
1		Accepted – With minor or no comments, construction may proceed				
2		Not Accepted – Please resolve comments and resubmit				
Acceptance does not constitute approval of design details, calculations, analysis, test methods or materials developed or selected by the subcontractor and does not relieve subcontractor from full compliance obligations.						
	ENG	CONST				
Reviewed						
Status By				Date		

RF DATA SHEET

DATE ISSUED: 06/25/2013 **REVISION: V1.12.00**

DRAWING INDEX

		REV
25736-635-AA-CNU3828-T01	TITLE SHEET	3
25736-635-AA-CNU3828-C-1	SITE SURVEY	3
25736-635-AA-CNU3828-C-2	ENLARGED SITE SURVEY	3
25736-635-AA-CNU3828-A01	OVERALL SITE PLAN	3
25736-635-AA-CNU3828-A02	ENLARGED SITE PLAN & ANTENNA LAYOUT	3
25736-635-AA-CNU3828-A02.1	EQUIPMENT / LEASE AREA LAYOUT & KEYNOTES	3
25736-635-AA-CNU3828-A03	SOUTH & WEST ELEVATIONS	3
25736-635-AA-CNU3828-D01	DETAILS	3
25736-635-AA-CNU3828-D02	DETAILS	3
25736-635-AA-CNU3828-L01	(E) TREE PLAN	3
25736-635-AA-CNU3828-L02	IRRIGATION PLAN	3
25736-635-AA-CNU3828-L03	IRRIGATION DETAILS	3
25736-635-AA-CNU3828-L04	PLANTING PLAN	3

CODE COMPLIANCE

ALL WORK AND MATERIALS SHALL BE PERFORMED AND INSTALLED IN ACCORDANCE WITH CURRENT EDITIONS OF THE CODES AS ADOPTED BY THE LOCAL GOVERNING AUTHORITIES. NOTHING IN THESE PLANS IS TO BE CONTRUCTED TO PERMIT WORK NOT CONFORMING TO THE LOCAL CODES.

2010 CALIFORNIA BUILDING CODE ('10 CBC)
2010 CALIFORNIA PLUMBING CODE ('10 CPC)
2010 CALIFORNIA ELECTRICAL CODE ('10 CEC)
2010 CALIFORNIA FIRE CODE ('10 CFC)
2011 MILPITAS MUNICIPAL CODE

DRIVING DIRECTION

DIRECTIONS FROM PLEASANTON, CA:

1. HEAD EAST ON ROSEWOOD DR
2. MAKE A U-TURN
3. TURN RIGHT ONTO OWENS DR
4. TURN LEFT ONTO HACIENDA DR
5. TURN RIGHT ONTO STONERIDGE DR
6. MERGE ONTO I-680 S VIA THE RAMP TO SAN JOSE
7. TAKE EXIT 9 FOR JACKLIN RD
8. TURN RIGHT ONTO JACKLIN RD
9. TURN RIGHT ONTO ESCUELA PKWY
10. TURN RIGHT ONTO ROGER ST/WASHINGTON DR
DESTINATION WILL BE ON THE LEFT

VICINITY MAP

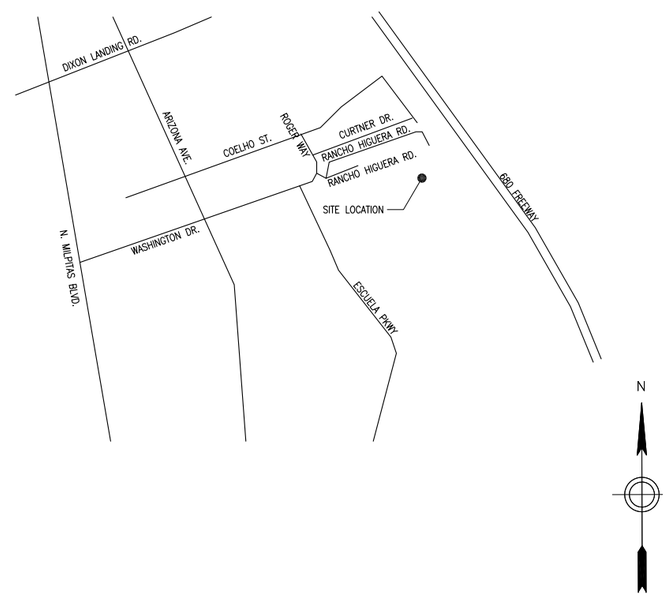

PROJECT DESCRIPTION

THE PROJECT CONSISTS OF THE INSTALLATION OF NEW EQUIPMENT SHELTER FOR AT&T EQUIPMENT. INSTALL (1) DC SURGE PROTECTION, (18) PAIR FIBER TRUNK CABLE, (6) DC POWER LINES, (36) RET'S, (6) LTE RRUS11, (9) UMTS RRUS11 AND (9) ANTENNAS MOUNTED TO (N) MONOPINE. THE SYSTEM WILL TRANSMIT AND RECEIVE RADIO SIGNALS FOR A REGIONAL UMTS/LTE PCS NETWORK.

PROJECT INFORMATION

SITE ADDRESS:	1585 ROGER STREET MILPITAS, CA 95035
PROPERTY OWNER:	MILPITAS UNIFIED SCHOOL DISTRICT 1331 E CALAVERAS BLVD MILPITAS, CA 95035
APPLICANT ADDRESS:	AT&T 4430 ROSEWOOD DRIVE, BLDG. # 3, 2ND FLOOR, PLEASANTON, CA 94588
JURISDICTION:	CITY OF MILPITAS
PROPERTY TAX ID:	026-26-001
ZONING DISTRICT:	I – INSTITUTIONAL
LATITUDE:	N 37° 27' 19.28" (NAD 83)
LONGITUDE:	W 121° 53' 51.77" (NAD 83)
ELEVATION:	82' AMSL (NAVD 88)
CURRENT USE:	SCHOOL
PROPOSED USE:	TELECOMMUNICATIONS FACILITY

SITE QUALIFICATION PARTICIPANT

	NAME	COMPANY	CONTACT NUMBER
A/E	JOE CONNELL	CONNELL DESIGN GROUP, L.L.C.	(949) 306-4650
SAC	TOM JOHNSON	TRILLIUM CONSULTING	(714) 206-2879
RF	DANILOPALOMA	AT&T	(925) 596-8626
ZONING	VALERIE TALLERICO	TRILLIUM CONSULTING	(714) 414-5618
LANDLORD	MICK FREITAG	MILPITAS UNIFIED SCHOOL DIST.	(480) 735-6901
CONSTRUCTION	C.E. RASK	BECHTEL	(925) 983-2320

CONNELL DESIGN GROUP, LLC
ENGINEERING AND DESIGN
26455 RANCHO PARKWAY SOUTH, LAKE FOREST, CA 92630
(949) 753-8807 OFFICE - (949) 753-8833 FAX

THOMAS RUSSELL SCHOOL JOINT USE PARK
CNU3828
1585 ROGER STREET
MILPITAS, CA 95035

at&t
4430 ROSEWOOD DRIVE, BLDG. # 3, 2ND FLOOR,
PLEASANTON, CA 94588

NO.	DATE	REVISIONS	BY	CHK	APP'D
3	07/02/13	UPDATED PER NEW RFDS	JPC	JPC	DC
2	05/09/13	ZDS FOR RESUBMITTAL	JPC	JPC	DC
1	04/25/13	ISSUED FOR PLANNING COMMENTS	JPC	JPC	DC
0	12/13/12	ZDS FOR SUBMITTAL	JPC	JPC	DC

SCALE: AS NOTED DESIGNED BY: DRAWN BY: JPC

TITLE SHEET

TITLE SHEET

JOB NUMBER	DRAWING NUMBER	SHEET NO.	REV
25736-635-AA	CNU3828	T01	3

CDG NO. CCU3828 22 x 34 "D" SIZE

Copyright © Bechtel Corporation 2011. This item contains confidential information proprietary to Bechtel that is not to be used, disclosed, or reproduced in any format by any non-Bechtel party without Bechtel's prior written permission. Notwithstanding the above, "AT&T Mobility" has the right to use the information contained in this document pursuant to Contract 25471 between Bechtel Corporation and "AT&T Mobility". All rights reserved.

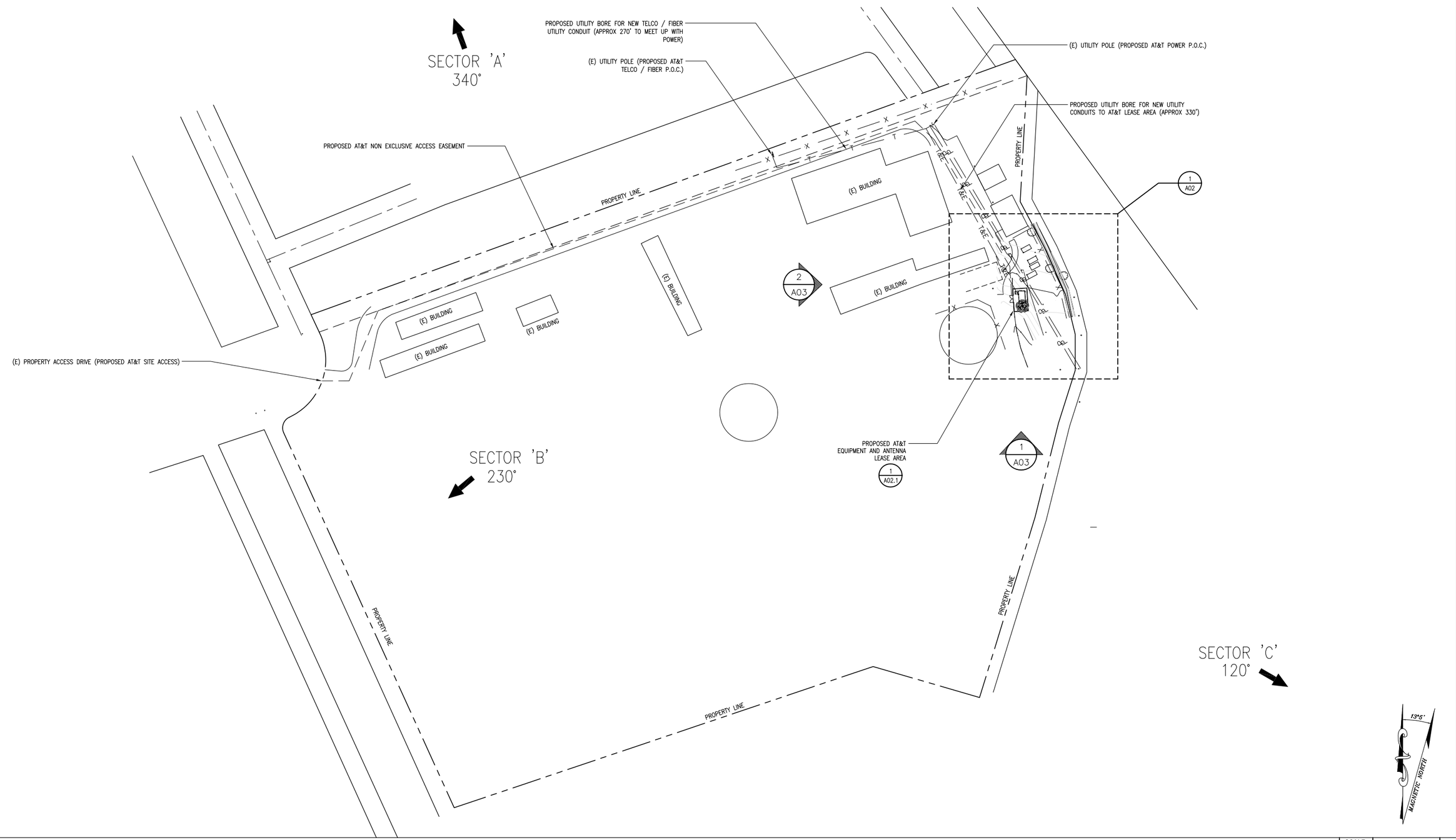

SITE PLAN

SCALE: 1"=80'-0" 0 40' 80' | 1

CONNELL DESIGN GROUP, LLC
ENGINEERING AND DESIGN
26455 RANCHO PARKWAY SOUTH, LAKE FOREST, CA 92630
(949) 753-8807 OFFICE - (949) 753-8833 FAX

THOMAS RUSSELL SCHOOL JOINT USE PARK
CNU3828
1585 ROGER STREET
MILPITAS, CA 95035

at&t
4430 ROSEWOOD DRIVE, BLDG. # 3, 2ND FLOOR,
PLEASANTON, CA 94588

NO.	DATE	REVISIONS	BY	CHK	APP'D
3	07/02/13	UPDATED PER NEW RFDS	JPC	JPC	DC
2	05/09/13	ZDS FOR RESUBMITTAL	JPC	JPC	DC
1	04/25/13	ISSUED FOR PLANNING COMMENTS	JPC	JPC	DC
0	12/13/12	ZDS FOR SUBMITTAL	JPC	JPC	DC

SCALE: AS NOTED | DESIGNED BY: | DRAWN BY: JPC

TITLE SHEET

SITE PLAN

JOB NUMBER	DRAWING NUMBER	SHEET NO.	REV
25736-635-AA	CNU3828	A01	3

CDG NO. CCU3828 22 x 34 "D" SIZE

Copyright © Bechtel Corporation 2011. This item contains confidential information proprietary to Bechtel that is not to be used, disclosed, or reproduced in any format by any non-Bechtel party without Bechtel's prior written permission. Notwithstanding the above, "AT&T Mobility" has the right to use the information contained in this document pursuant to Contract 25471 between Bechtel Corporation and "AT&T Mobility". All rights reserved.

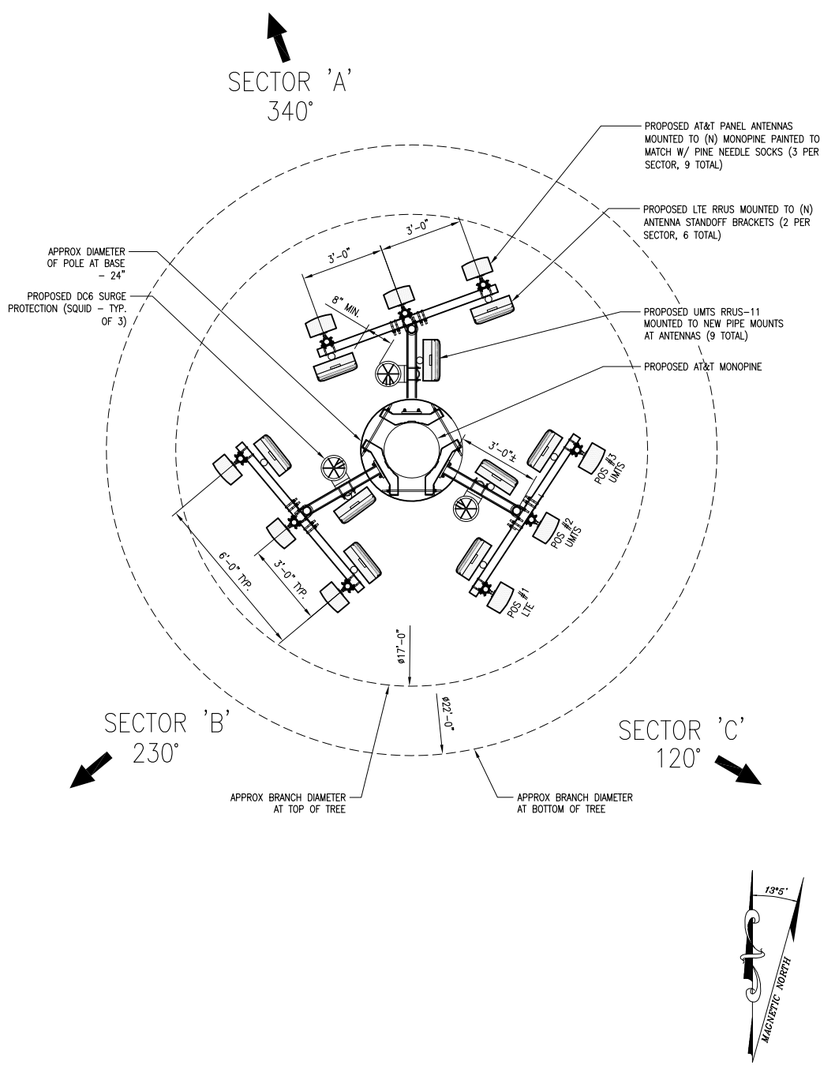

ANTENNA LAYOUT

SCALE: 3/8"=1'-0" (0 1' 2' 3')

2

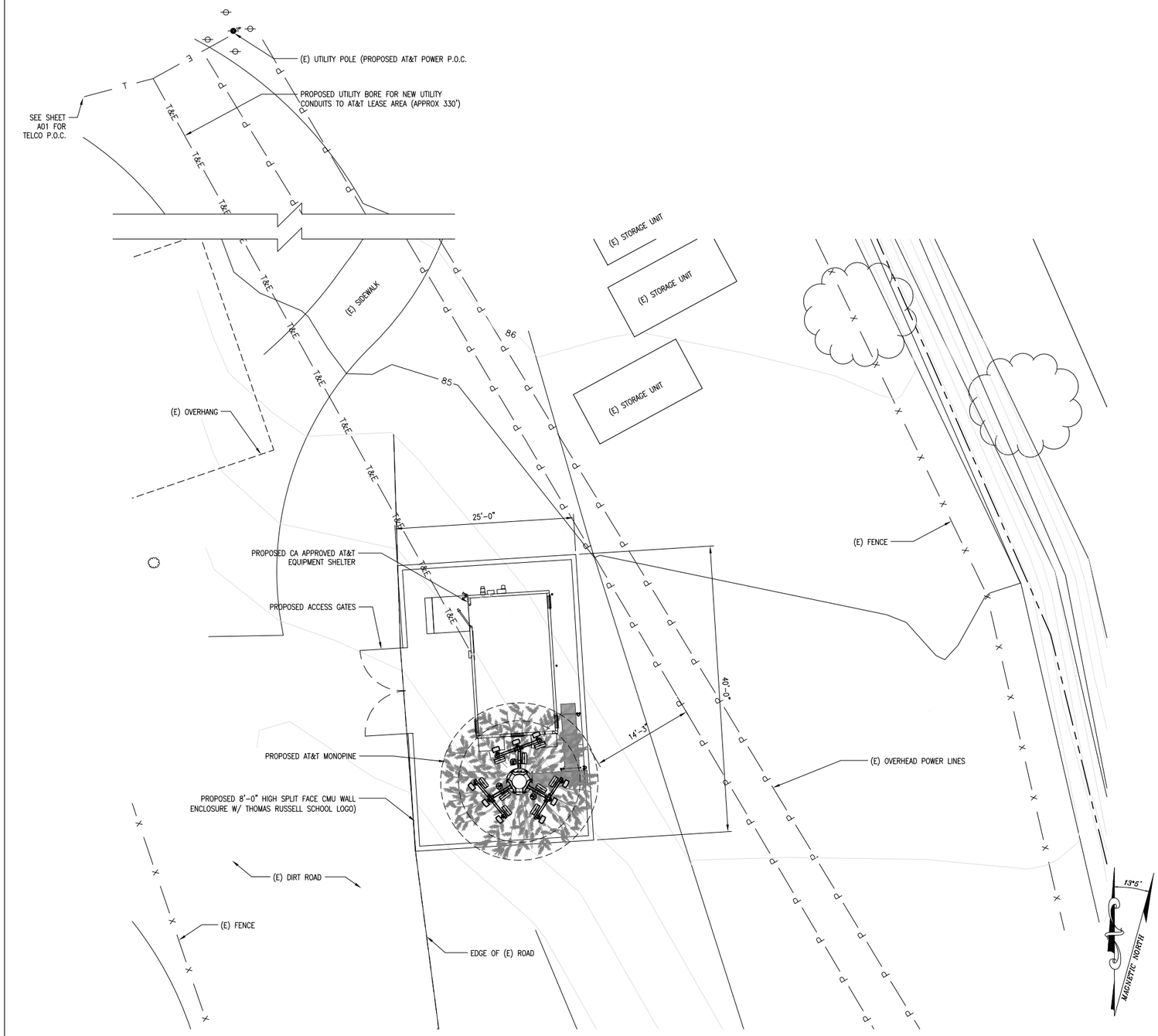

ENLARGED SITE PLAN

SCALE: 1/8"=1'-0" (0 4' 8')

1

Copyright © Bechtel Corporation 2011. This item contains confidential information proprietary to Bechtel that is not to be used, disclosed, or reproduced in any format by any non-Bechtel party without Bechtel's prior written permission. Notwithstanding the above, "AT&T Mobility" has the right to use the information contained in this document pursuant to Contract 25471 between Bechtel Corporation and "AT&T Mobility". All rights reserved.

CONNELL DESIGN GROUP, LLC
ENGINEERING AND DESIGN
26455 RANCHO PARKWAY SOUTH, LAKE FOREST, CA 92630
(949) 753-8807 OFFICE - (949) 753-8833 FAX

THOMAS RUSSELL SCHOOL JOINT USE PARK
CNU3828
1585 ROGER STREET
MILPITAS, CA 95035

at&t
4430 ROSEWOOD DRIVE, BLDG. # 3, 2ND FLOOR,
PLEASANTON, CA 94588

NO.	DATE	REVISIONS	BY	CHK	APP'D
3	07/02/13	UPDATED PER NEW RFDS	JPC	JPC	DC
2	05/09/13	ZDS FOR RESUBMITTAL	JPC	JPC	DC
1	04/25/13	ISSUED FOR PLANNING COMMENTS	JPC	JPC	DC
0	12/13/12	ZDS FOR SUBMITTAL	JPC	JPC	DC

SCALE: AS NOTED | DESIGNED BY: | DRAWN BY: JPC

TITLE SHEET

ENLARGED SITE PLAN / ANTENNA LAYOUT AND EQUIPMENT LAYOUT

JOB NUMBER	DRAWING NUMBER	SHEET NO.	REV
25736-635-AA	CNU3828	A02	3

CDG NO. CCU3828 — 22 x 34 "D" SIZE

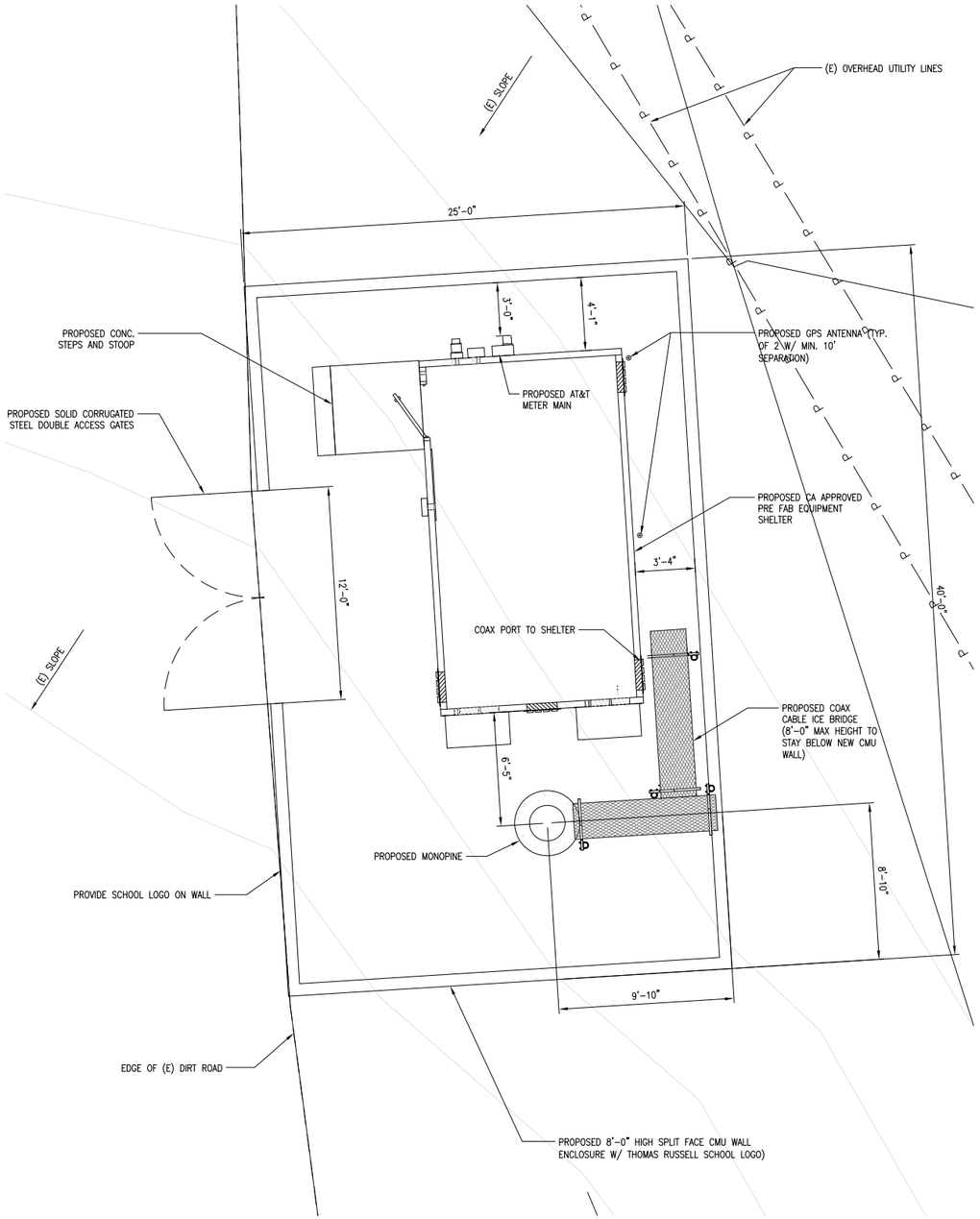

LEASE AREA LAYOUT

SCALE: 1/4"=1'-0" 0 2' 4'

2

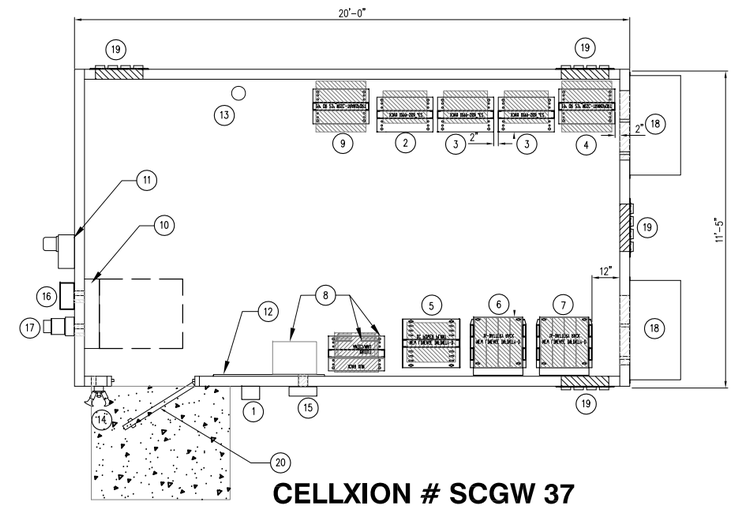

KEY NOTES

1. FIRE DEPT. KNOX BOX
2. 23" RACK FOR 6601 UMTS (1.5U EACH)
3. 23" RACK FOR 6601 LTE (1.5U EACH)
4. 23" TRANSPORT/MISC RACK
5. INFINITY-D DC POWER PLANT
6. INFINITY-D BATTERY RACK
7. FUTURE INFINITY-D BATTERY RACK)
8. MUX & FUTURE UAM/CIENA MOUNT ON 23" TELCO RACK
9. FUTURE 23" RACK
10. 200 AMP ELECTRICAL PANEL (PROVIDED W/SHELTER)
11. NEW METER MAIN
12. PLYWOOD TELCO BACKBOARD (48 x48 x$\frac{3}{4}$")
13. FIRE EXTINGUISHER (CFC SECTION 906.2)
14. OVERHEAD LIGHT
15. TELCO ENTRY
16. SVC DISCONNECT (EMERGENCY SHIT DOWN)
17. GENERATOR PLUG
18. A/C UNIT
19. COAX ENTRY PORT
20. EMERGENCY CONTACT, HAZARDOUS MATERIAL AND SITE IDENTIFICATION SIGNAGE PLACED ON (N) SHELTER DOOR

1

CONNELL DESIGN GROUP, LLC
ENGINEERING AND DESIGN
26455 RANCHO PARKWAY SOUTH, LAKE FOREST, CA 92630
(949) 753-8807 OFFICE - (949) 753-8833 FAX

THOMAS RUSSELL SCHOOL JOINT USE PARK
CNU3828
1585 ROGER STREET
MILPITAS, CA 95035

at&t
4430 ROSEWOOD DRIVE, BLDG. # 3, 2ND FLOOR,
PLEASANTON, CA 94588

NO.	DATE	REVISIONS	BY	CHK	APP'D
3	07/02/13	UPDATED PER NEW RFDS	JPC	JPC	DC
2	05/09/13	ZDS FOR RESUBMITTAL	JPC	JPC	DC
1	04/25/13	ISSUED FOR PLANNING COMMENTS	JPC	JPC	DC
0	12/13/12	ZDS FOR SUBMITTAL	JPC	JPC	DC

SCALE: AS NOTED DESIGNED BY: DRAWN BY: JPC

TITLE SHEET

EQUIPMENT / LEASE AREA LAYOUT, KEY NOTES

JOB NUMBER	DRAWING NUMBER	SHEET NO.	REV
25736-635-AA	CNU3828	A02.1	3

CDG NO. CCU3828 22 x 34 "D" SIZE

Copyright © Bechtel Corporation 2011. This item contains confidential information proprietary to Bechtel that is not to be used, disclosed, or reproduced in any format by any non-Bechtel party without Bechtel's prior written permission. Notwithstanding the above, "AT&T Mobility" has the right to use the information contained in this document pursuant to Contract 25471 between Bechtel Corporation and "AT&T Mobility". All rights reserved.

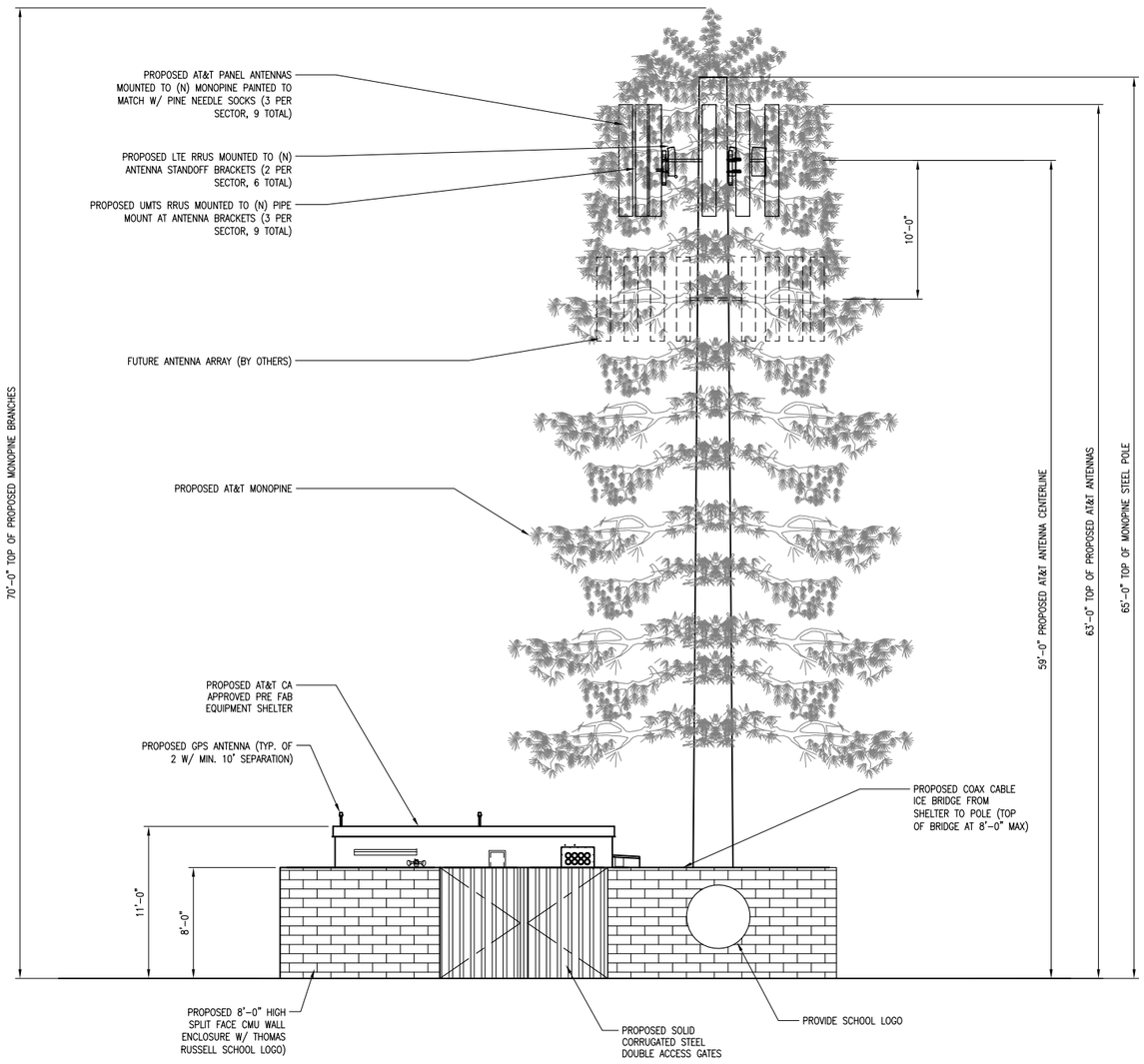

WEST ELEVATION

SCALE: 3/16"=1'-0" 0 2' 4' 6' | 2

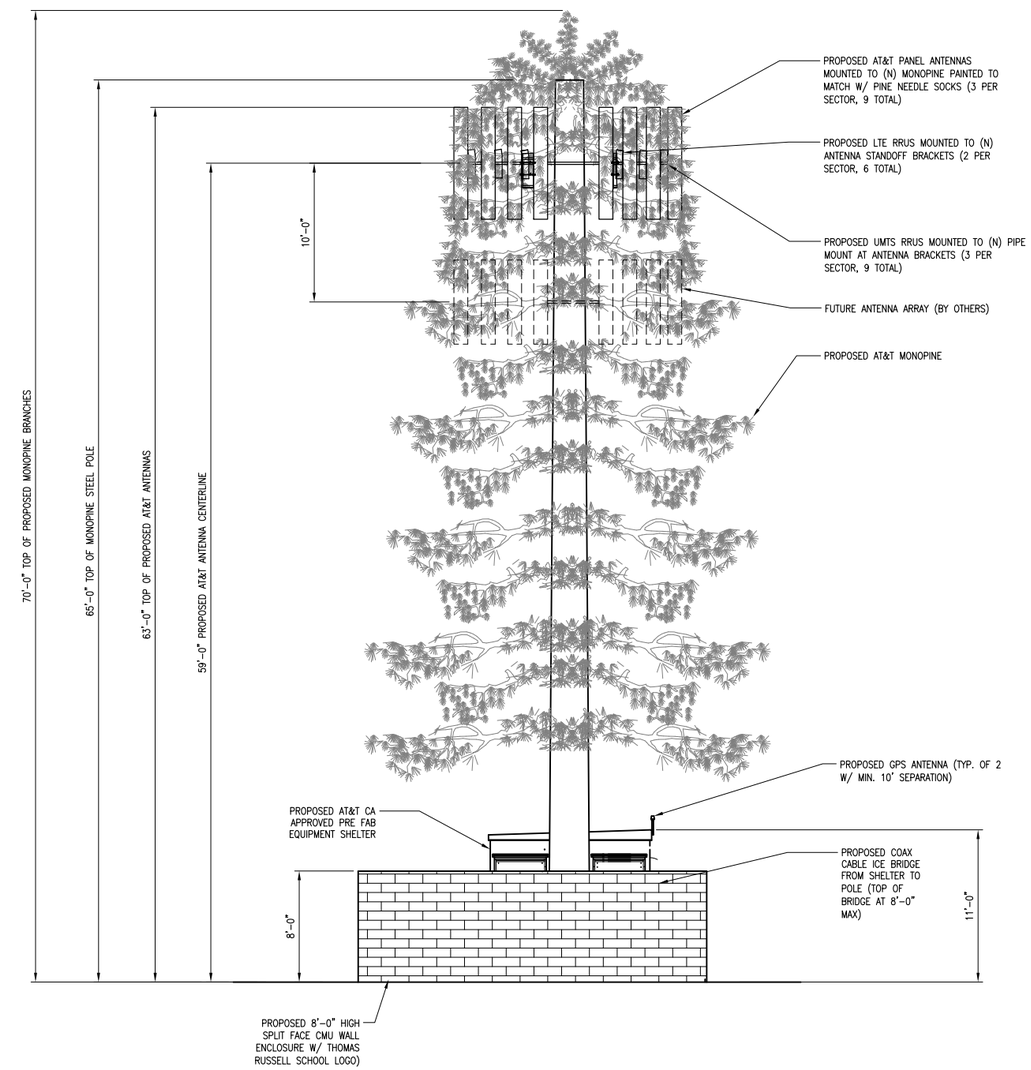

SOUTH ELEVATION

SCALE: 3/16"=1'-0" 0 2' 4' 6' | 1

Copyright © Bechtel Corporation 2011. This item contains confidential information proprietary to Bechtel that is not to be used, disclosed, or reproduced in any format by any non-Bechtel party without Bechtel's prior written permission. Notwithstanding the above, "AT&T Mobility" has the right to use the information contained in this document pursuant to Contract 25471 between Bechtel Corporation and "AT&T Mobility". All rights reserved.

CONNELL DESIGN GROUP, LLC
ENGINEERING AND DESIGN
26455 RANCHO PARKWAY SOUTH, LAKE FOREST, CA 92630
(949) 753-8807 OFFICE - (949) 753-8833 FAX

THOMAS RUSSELL SCHOOL JOINT USE PARK
CNU3828
1585 ROGER STREET
MILPITAS, CA 95035

at&t
4430 ROSEWOOD DRIVE, BLDG. # 3, 2ND FLOOR,
PLEASANTON, CA 94588

NO.	DATE	REVISIONS	BY	CHK	APP'D
3	07/02/13	UPDATED PER NEW RFDS	JPC	JPC	DC
2	05/09/13	ZDS FOR RESUBMITTAL	JPC	JPC	DC
1	04/25/13	ISSUED FOR PLANNING COMMENTS	JPC	JPC	DC
0	12/13/12	ZDS FOR SUBMITTAL	JPC	JPC	DC

SCALE: AS NOTED | DESIGNED BY: | DRAWN BY: JPC

TITLE SHEET

ELEVATIONS

JOB NUMBER	DRAWING NUMBER	SHEET NO.	REV
25736-635-AA	CNU3828	A03	3

CDG NO. CCU3828 22 x 34 "D" SIZE

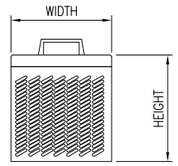

RRUS 11

SIZE AND WEIGHT TABLE

RRUS	WIDTH	DEPTH	HEIGHT W/O CABLE MANAGEMENT COVER	WEIGHT W/O BRACKET
RRUS11 (700 MHz) WITHOUT SOLAR SHIELD	19.7"	7.2"	17"	54 LBS.
RRUS11 (700 MHz) SOLAR SHIELD	19.7"	7.2"	17"	54 LBS.
RRUS11 (AWS 1700/2100M MHz) SOLAR SHIELD	19.7"	7.2"	17"	54 LBS.
RRUS11 (AWS 1700/2100M MHz) SOLAR SHIELD	19.7"	7.2"	17"	54 LBS.

MINIMUM CLEARANCE TABLE FOR RRUS01/RRUW–INSTALL PER MANUFACTURER SPECIFICATIONS

RRU CABINET	CLEARANCES (INCHES)	COMMENTS
FRONT	36"	INSTALLATION ACCESS
REAR	0"	ZERO REAR CLEARANCE IS ALLOWED USING SUPPLIED MOUNTING BRACKETS
RIGHT	8"	FROM SOLAR SHIELD
LEFT	8"	FROM SOLAR SHIELD
ABOVE/TOP	16"	FROM CEILING FOR AIR FLOW (NOTE1)
BOTTOM	12"	CONDUIT ROUTING/AIR FLOW

NOTES:

1. NO PAINTING OF RRU OR THE SOLAR SHIELD IS ALLOWED

RRU DETAIL

SCALE: N.T.S. | 3

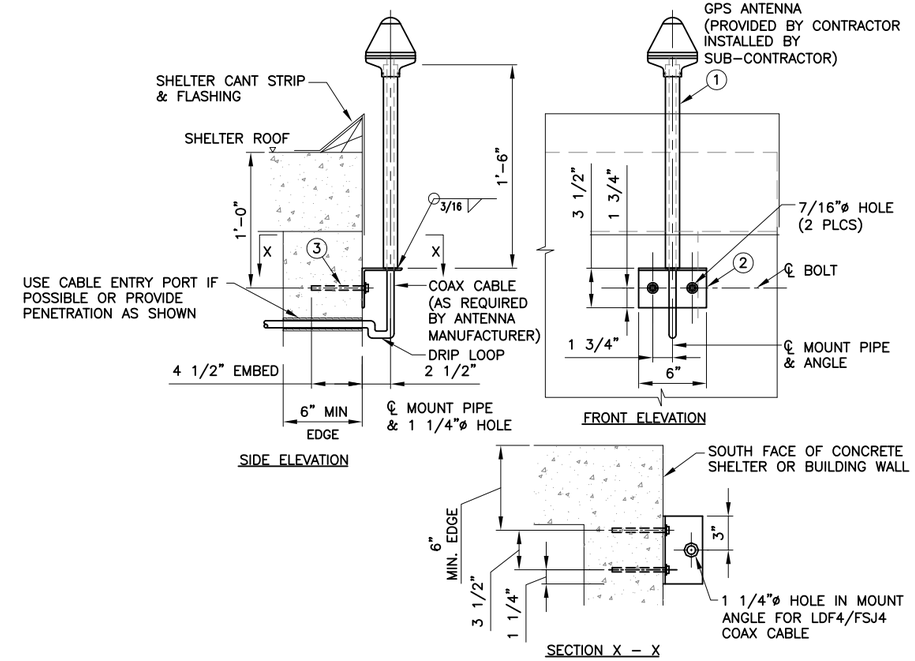

BILL OF MATERIALS

ITEM#	DESCRIPTION	QUANTITY (each)
1	1 1/2"⌀ O.D. x 1'–6" LG. GALV STEEL PIPE	1
2	L 3 1/2 X 3 1/2 x 1/4 x 0'–6" LG. GALV STEEL MOUNT ANGLE	1
3	HILTI KB TZ 3/8"ø W/ 4 1/2" MIN. EMB. (GALVANIZED) EXPANSION BOLTS	2

NOTES:

1. LOCATION OF ANTENNA MUST HAVE CLEAR VIEW OF SOUTHERN SKY AND CANNOT HAVE ANY BLOCKAGES EXCEEDING 25% OF THE SURFACE AREA OF A HEMISPHERE AROUND THE GPS ANTENNA.
2. ALL GPS ANTENNA LOCATIONS MUST BE ABLE TO RECEIVE CLEAR SIGNALS FROM A MINIMUM OF FOUR (4) SATELLITES. VERIFY WITH HANDHELD GPS BEFORE FINAL LOCATION OF GPS ANTENNA.

E911 – GPS ANTENNA
WALL MOUNTING DETAIL FOR NEW BUILD

DETAIL 1324
NTS –

GPS ANTENNA DETAIL

SCALE: N.T.S. | 2

CONNELL DESIGN GROUP, LLC
ENGINEERING AND DESIGN
26455 RANCHO PARKWAY SOUTH, LAKE FOREST, CA 92630
(949) 753-8807 OFFICE - (949) 753-8833 FAX

THOMAS RUSSELL SCHOOL JOINT USE PARK
CNU3828
1585 ROGER STREET
MILPITAS, CA 95035

at&t
4430 ROSEWOOD DRIVE, BLDG. # 3, 2ND FLOOR,
PLEASANTON, CA 94588

NO.	DATE	REVISIONS	BY	CHK	APP'D
3	07/02/13	UPDATED PER NEW RFDS	JPC	JPC	DC
2	05/09/13	ZDS FOR RESUBMITTAL	JPC	JPC	DC
1	04/25/13	ISSUED FOR PLANNING COMMENTS	JPC	JPC	DC
0	12/13/12	ZDS FOR SUBMITTAL	JPC	JPC	DC

SCALE: AS NOTED | DESIGNED BY: | DRAWN BY: JPC

TITLE SHEET

DETAILS

JOB NUMBER	DRAWING NUMBER	SHEET NO.	REV
25736–635–AA	CNU3828	D01	3

CDG NO. CCU3828 22 x 34 "D" SIZE

Copyright © Bechtel Corporation 2011. This item contains confidential information proprietary to Bechtel that is not to be used, disclosed, or reproduced in any format by any non–Bechtel party without Bechtel's prior written permission. Notwithstanding the above, "AT&T Mobility" has the right to use the information contained in this document pursuant to Contract 25471 between Bechtel Corporation and "AT&T Mobility". All rights reserved.

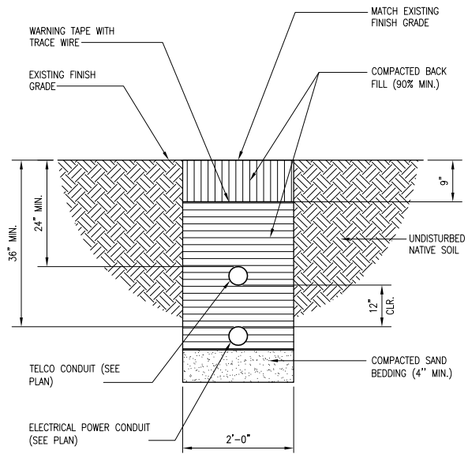

UTILITY TRENCH DETAIL

SCALE: N.T.S. | 2

NOTES:

1. RAYCAP VIA AT&T SUPPLIES THE DC6 OVER VOLTAGE PROTECTOR AND PIPE MOUNTING BRACKETS. SUBCONTRACTOR SHALL SUPPLY THE PIPE.

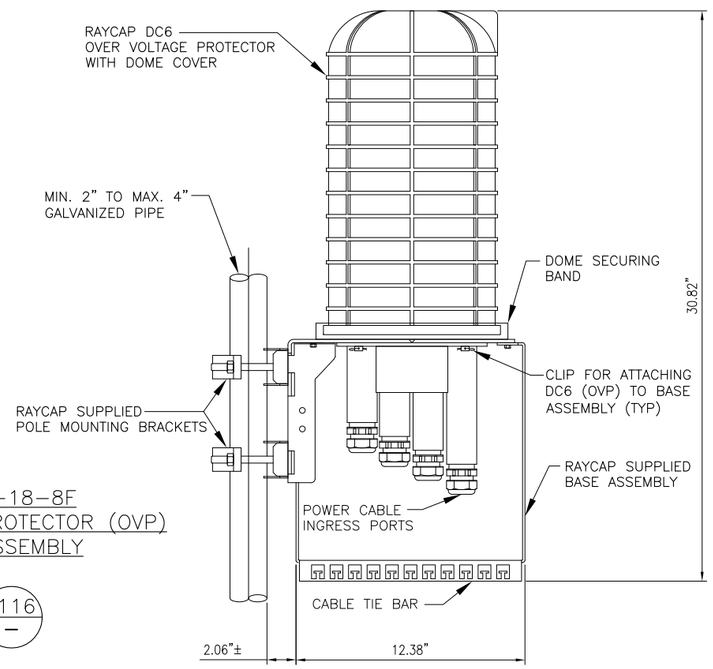

RAYCAP DC6-48-60-18-8F
DC POWER OVER VOLTAGE PROTECTOR (OVP)
POLE MOUNT BASE ASSEMBLY

DETAIL 1116 / NTS

DC6 SURGE PROTECTION

SCALE: N.T.S. | 3

SECTOR	AZIMUTH		ANTENNA MAKE/MODEL NO./SIZE	RAD CENTER HEIGHT (AGL.)	TMA	RRU	FIBER LENGTH	JUMPER LENGTH	JUMPER DIAMETER
ALPHA	1	340°	SBNHH-1D65C ANDREW 96"H x 11.85"W x 7.1"D	59'-0"	N/A	RRUS-11-700 RRUS-11-1900	100'±	10'	1/2"ø
	2	340°	SBNHH-1D65C ANDREW 96"H x 11.85"W x 7.1"D	59'-0"	N/A	RRUS-11-850 RRUS-11-1900	40'±	10'	1/2"ø
	3	340°	SBNHH-1D65C ANDREW 96"H x 11.85"W x 7.1"D	59'-0"	N/A	RRUS-11-1900	40'±	10'	1/2"ø
BETA	1	230°	SBNHH-1D65C ANDREW 96"H x 11.85"W x 7.1"D	59'-0"	N/A	RRUS-11-700 RRUS-11-1900	100'±	10'	1/2"ø
	2	230°	SBNHH-1D65C ANDREW 96"H x 11.85"W x 7.1"D	59'-0"	N/A	RRUS-11-850 RRUS-11-1900	40'±	10'	1/2"ø
	3	230°	SBNHH-1D65C ANDREW 96"H x 11.85"W x 7.1"D	59'-0"	N/A	RRUS-11-1900	40'±	10'	1/2"ø
GAMMA	1	120°	SBNHH-1D65C ANDREW 96"H x 11.85"W x 7.1"D	59'-0"	N/A	RRUS-11-700 RRUS-11-1900	100'±	10'	1/2"ø
	2	120°	SBNHH-1D65C ANDREW 96"H x 11.85"W x 7.1"D	59'-0"	N/A	RRUS-11-850 RRUS-11-1900	40'±	10'	1/2"ø
	3	120°	SBNHH-1D65C ANDREW 96"H x 11.85"W x 7.1"D	59'-0"	N/A	RRUS-11-1900	40'±	10'	1/2"ø

NOTES:

1. ALL MATERIALS ON THE ABOVE TABLE SHALL BE PROVIDED BY THE AT&T WIRELESS TO THE CONTRACTOR FOR INSTALLATION.
2. CONTRACTOR SHALL AS-BUILT CABLE LENGTHS AND PROVIDE ANTENNA SERIAL NUMBERS ON RED-LINED DRAWINGS.
3. COAX GROUND KITS, COAX WEATHER PROOFING, SNAP-IN HANGER CLAMPS AND HOISTING GRIPS SHALL BE PROVIDED BY THE AT&T WIRELESS TO THE CONTRACTOR FOR INSTALLATION.
4. CONTRACTOR MUST ALSO INSTALL THE COAXIAL CABLES FOR THE FUTURE ANTENNAS.
5. CONTRACTOR TO REFER TO B.O.M. AND RF BUILD SHEET FOR NUMBER AND TYPE OF ANTENNA(S) TO INSTALL.

ANTENNA SCHEDULE / DETAIL

SCALE: N.T.S. | 1

CONNELL DESIGN GROUP, LLC
ENGINEERING AND DESIGN
26455 RANCHO PARKWAY SOUTH, LAKE FOREST, CA 92630
(949) 753-8807 OFFICE - (949) 753-8833 FAX

THOMAS RUSSELL SCHOOL JOINT USE PARK
CNU3828
1585 ROGER STREET
MILPITAS, CA 95035

at&t
4430 ROSEWOOD DRIVE, BLDG. # 3, 2ND FLOOR,
PLEASANTON, CA 94588

NO.	DATE	REVISIONS	BY	CHK	APP'D
3	07/02/13	UPDATED PER NEW RFDS	JPC	JPC	DC
2	05/09/13	ZDS FOR RESUBMITTAL	JPC	JPC	DC
1	04/25/13	ISSUED FOR PLANNING COMMENTS	JPC	JPC	DC
0	12/13/12	ZDS FOR SUBMITTAL	JPC	JPC	DC

SCALE: AS NOTED | DESIGNED BY: | DRAWN BY: JPC

TITLE SHEET

FENCE DETAILS, NOTES

JOB NUMBER	DRAWING NUMBER	SHEET NO.	REV
25736-635-AA	CNU3828	D02	3

CDG NO. CCU3828 — 22 x 34 "D" SIZE

Copyright © Bechtel Corporation 2011. This item contains confidential information proprietary to Bechtel that is not to be used, disclosed, or reproduced in any format by any non-Bechtel party without Bechtel's prior written permission. Notwithstanding the above, "AT&T Mobility" has the right to use the information contained in this document pursuant to Contract 25471 between Bechtel Corporation and "AT&T Mobility". All rights reserved.

Copyright © Bechtel Corporation 2011. This item contains confidential information proprietary to Bechtel that is not to be used, disclosed, or reproduced in any format by any non-Bechtel party without Bechtel's prior written permission. Notwithstanding the above, "AT&T Mobility" has the right to use the information contained in this document pursuant to Contract 25471 between Bechtel Corporation and "AT&T Mobility". All rights reserved.

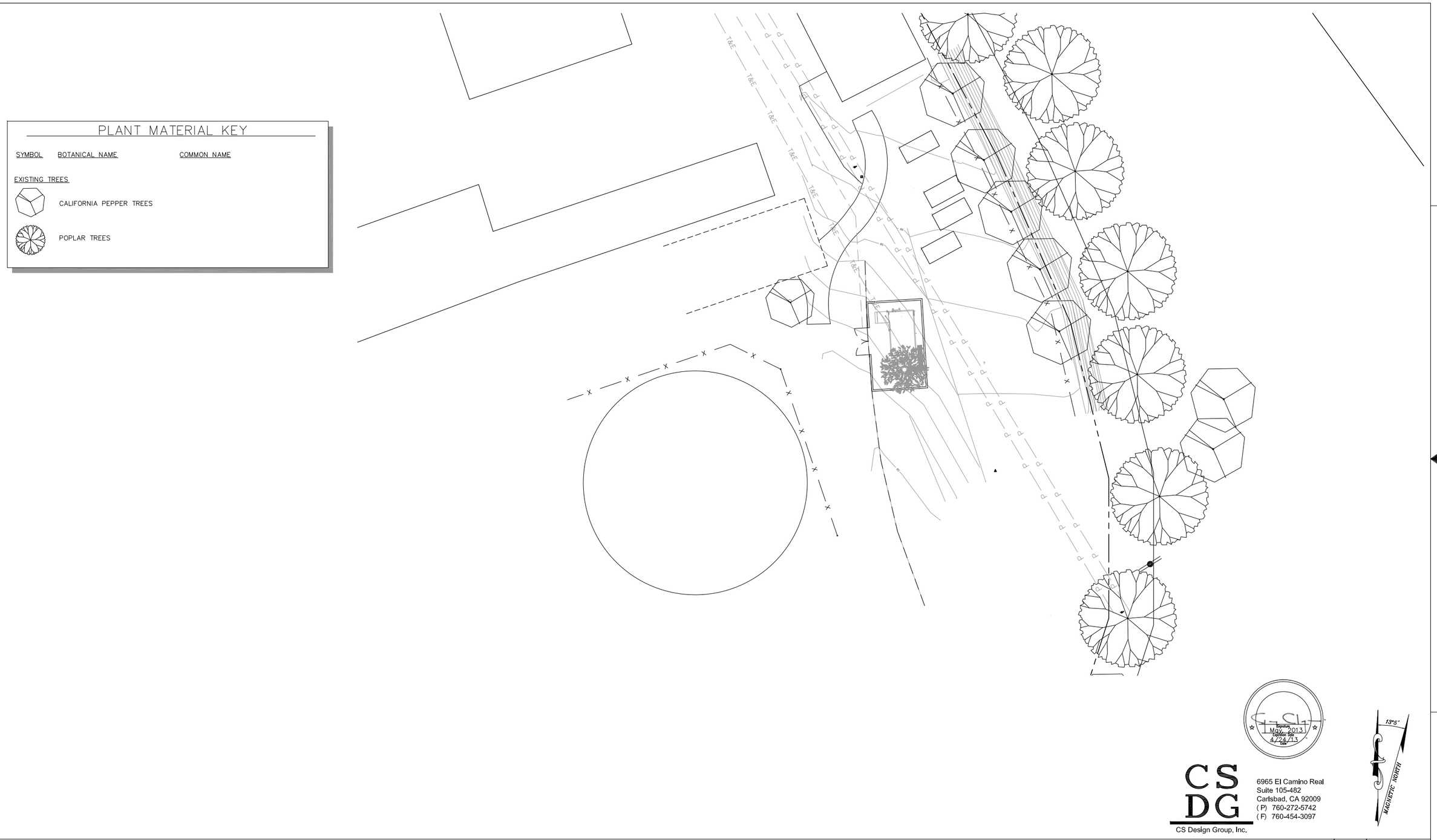

EXISTING TREE PLAN

SCALE: 1"=20'-0" (0 10' 20')

CONNELL DESIGN GROUP, LLC
ENGINEERING AND DESIGN
26455 RANCHO PARKWAY SOUTH, LAKE FOREST, CA 92630
(949) 753-8807 OFFICE - (949) 753-8833 FAX

THOMAS RUSSELL SCHOOL JOINT USE PARK
CNU3828
1585 ROGER STREET
MILPITAS, CA 95035

at&t
4430 ROSEWOOD DRIVE, BLDG. # 3, 2ND FLOOR,
PLEASANTON, CA 94588

NO.	DATE	REVISIONS	BY	CHK	APP'D
3	07/02/13	UPDATED PER NEW RFDS	JPC	JPC	DC
2	05/09/13	ZDS FOR RESUBMITTAL	JPC	JPC	DC
1	04/25/13	ISSUED FOR PLANNING COMMENTS	JPC	JPC	DC
0	12/13/12	ZDS FOR SUBMITTAL	JPC	JPC	DC

SCALE: AS NOTED | DESIGNED BY: | DRAWN BY: JPC

TITLE SHEET

EXISTING TREE PLAN

JOB NUMBER	DRAWING NUMBER	SHEET NO.	REV
25736-635	AA-CNU3828	L01	1

CDG NO. CCU3828

22 x 34 "D" SIZE

Irrigation Legend

Symbol	Catalogue No.	Manuf.	Description	GPM	PSI	Detail No.
●	1806-5HB	RAINBIRD	6" POP-UP STREAM SPRAY NOZZLE	1.5	30	A, SHEET L-2
⧗	NIBCO	NIBCO	BALL VALVE			B, SHEET L-2
◐	PGA SERIES	RAINBIRD	REMOTE CONTROL VALVE	1"	SET 30PSI	C, SHEET L-2
BF	825YA	FEBCO	REDUCED PRESS. BACKFLOW DEVICE			D, SHEET L-2
C	ESP-SMT4	RAINBIRD	4-STATION OUTDOOR			E, SHEET L-2
R	RAIN CLIK	HUNTER	RAIN SENSOR			

——— Schedule 40 PVC Refer To Detail B, Sheet L-2 for Mtrl from WM to BF.
Otherwise, Main Line Pipe @ 24" Min. Depth (1-1/4" Diameter Unless Otherwise Indicated)

——— Schedule 40 PVC Pipe @ 18" Min. Depth (3/4" Diameter Unless Otherwise Indicated)

- - - - Schedule 40 PVC Sleeving (1)" Diameter Unless Otherwise Indicated)

GPM 1 1" — Maximum Flow (GPM) Through Valve; Controller Station; Valve Size

NOTES:
Backflow Device. Install new backflow device only if one does not exist or existing device does not meet current City standards.
Controller Device. Install new controller only if one does not exist or existing controller does not meet current City standards.

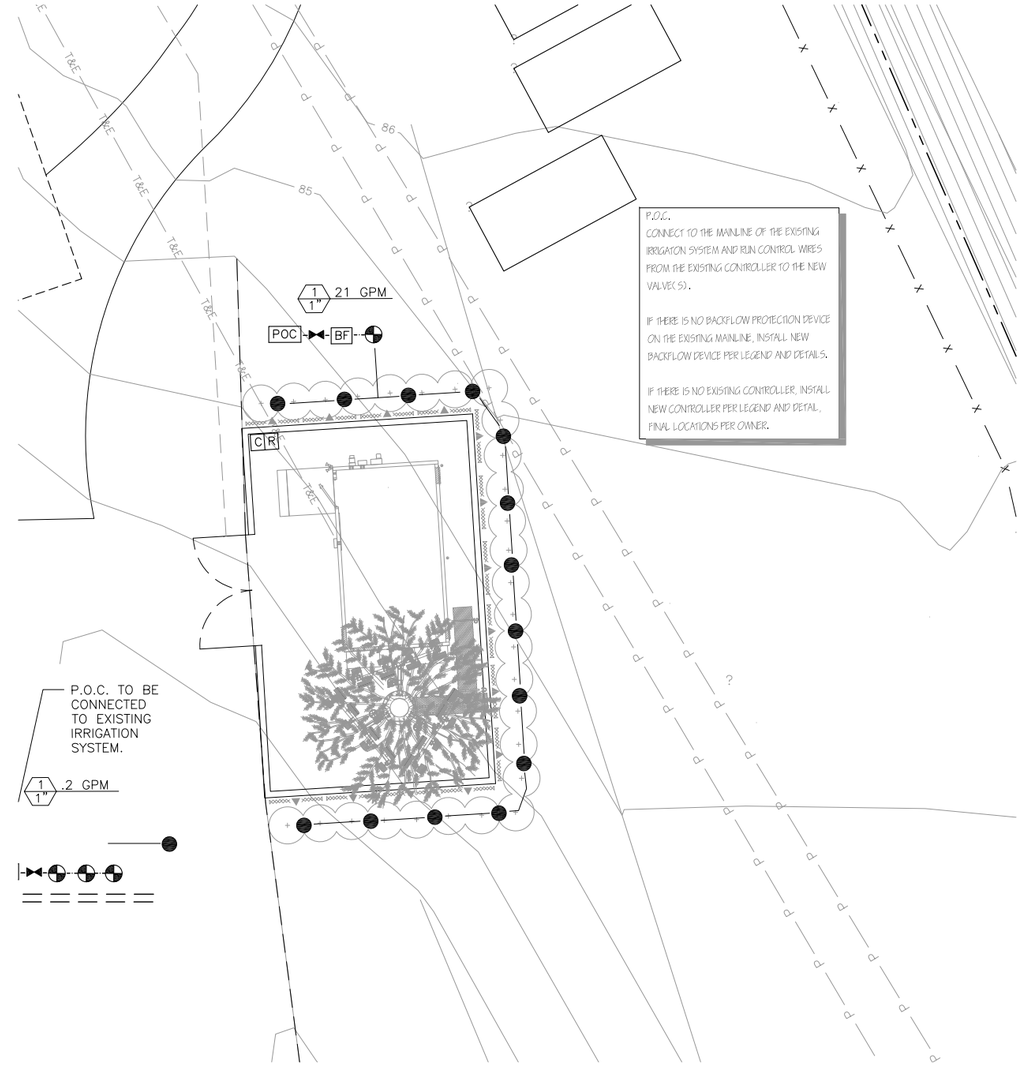

REFER TO SHEET I-3 FOR IRRIGATON DETAILS

IRRIGATION PLAN

CS DG
CS Design Group, Inc.
6965 El Camino Real
Suite 105-482
Carlsbad, CA 92009
(P) 760-272-5742
(F) 760-454-3097

SCALE: 1/8"=1'-0" 0 4' 8'

CDG
CONNELL DESIGN GROUP, LLC
ENGINEERING AND DESIGN
26455 RANCHO PARKWAY SOUTH, LAKE FOREST, CA 92630
(949) 753-8807 OFFICE - (949) 753-8833 FAX

THOMAS RUSSELL SCHOOL JOINT USE PARK
CNU3828
1585 ROGER STREET
MILPITAS, CA 95035

at&t
4430 ROSEWOOD DRIVE, BLDG. # 3, 2ND FLOOR,
PLEASANTON, CA 94588

NO.	DATE	REVISIONS	BY	CHK	APP'D
3	07/02/13	UPDATED PER NEW RFDS	JPC	JPC	DC
2	05/09/13	ZDS FOR RESUBMITTAL	JPC	JPC	DC
1	04/25/13	ISSUED FOR PLANNING COMMENTS	JPC	JPC	DC
0	12/13/12	ZDS FOR SUBMITTAL	JPC	JPC	DC

SCALE: AS NOTED | DESIGNED BY: | DRAWN BY: JPC

TITLE SHEET

IRRIGATON PLAN

JOB NUMBER	DRAWING NUMBER	SHEET NO.	REV
25736-635	AA-CNU3828	L02	1

CDG NO. CCU3828 22 x 34 "D" SIZE

Copyright © Bechtel Corporation 2011. This item contains confidential information proprietary to Bechtel that is not to be used, disclosed, or reproduced in any format by any non-Bechtel party without Bechtel's prior written permission. Notwithstanding the above, "AT&T Mobility" has the right to use the information contained in this document pursuant to Contract 25471 between Bechtel Corporation and "AT&T Mobility". All rights reserved.

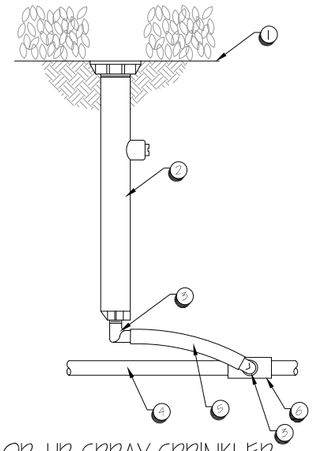

1. FINISH GRADE / TOP OF MULCH
2. POP-UP SPRAY SPRINKLER; RAIN BIRD 1806-SAM-PRS
3. 1/2-INCH MALE NPT x .490 INCH BARB ELBOW; RAIN BIRD MODEL 58E-050
4. PVC LATERAL PIPE
5. SWING PIPE, 12-INCH LENGTH; RAIN BIRD MODEL SP-100
6. PVC SCH 40 TEE OR ELL

A POP-UP SPRAY SPRINKLER

N.T.S.

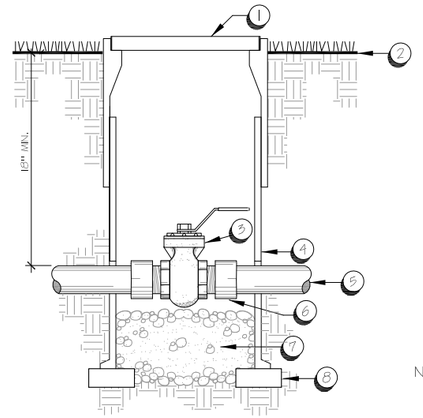

1. 9" DIAMETER ROUND GREEN PLASTIC VALVE BOX W/ G.V. BURNED INTO LID (MIN. 2" HIGH)
2. FINISH GRADE
3. BALL VALVE, LINE SIZE
4. VALVE BOX EXTENSION, LENGTH AS REQUIRED
5. PVC MAINLINE
6. PVC MALE ADAPTER
7. 3/4" PEA GRAVEL
8. BRICK SUPPORTS

NOTE: UTILIZE PURPLE VALVE BOXES FOR RECLAIMED LINES

B BRASS BALL VALVE

N.T.S.

NOTES:
- ALL WIRE SHALL BE INSTALLED PER LOCAL CODE.
- PROVIDE EXPANSION COILS AT EACH WIRE CONNECTION IN VALVE BOX (10 WRAPS AROUND A 1/2" DIA. PIPE).
- SET BOXES 1" ABOVE FINISH GRADE OR MULCH COVER IN GROUND COVER/ SHRUB AREA AND FLUSH WITH FINISH GRADE IN TURF AREA.

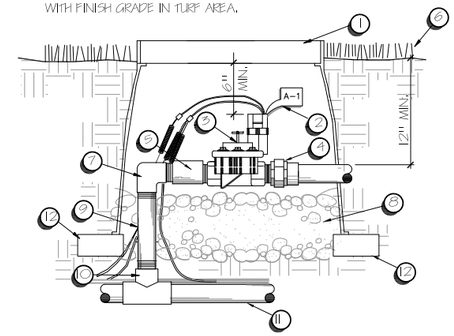

1. AMETEK GREEN PLASTIC VALVE BOX W/ GREEN LOCKING COVER OR EQUAL AND "RMV" BURNED INTO LID (MIN. 2" HIGH)
2. CHRISTY I.D. TAG; NUMBERED TO MATCH PLANS
3. CONTROL VALVE
4. PVC UNION
5. PVC SCH. 80 NIPPLE (TYP.)
6. FINISH GRADE; COMPACT SOIL AROUND VALVE BOX
7. PVC SCH.40 S AND T ELL
8. 3/4" PEA GRAVEL
9. PVC SCH. 40-1120 PIPE
10. PVC SLIP FITTING
11. PVC MAINLINE
12. BRICK SUPPORTS

C REMOTE CONTROL VALVE

N.T.S. B.G. STANDARD

NOTES:
- LEMEUR ENCLOSURE UNIT SHALL BE HINGED; PROVIDE ADEQUATE SIZE AS REQUIRED TO HINGE OVER BACKFLOW UNIT. CAST SUPPORT HARDWARE INTO CONCRETE SLAB

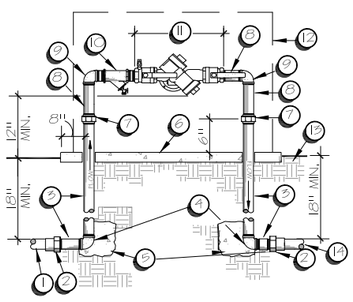

1. IRRIGATION MAINLINE FROM P.O.C.
2. PVC MALE ADAPTER
3. GALVANIZED NIPPLES, WRAP UNDERGROUND PIPE WITH (2) WRAPS DUCT TAPE'
4. GALVANZIED 90 ELBOW
5. 18" BY 18" BY 18" CONCRETE THRUST BLOCK
6. 4" CONCRETE SLAB
7. DIELECTRIC COUPLING
8. BRASS NIPPLE, TYPICAL
9. BRASS 90 ELBOW, TYPICAL
10. ARMSTRONG BRASS WYE STRAINER, LINE SIZE.
11. REDUCED PRESSURE BACKFLOW PREVENTER WITH IN LINE VALVES; INSTALL PER LOCAL CODE
12. BACKFLOW PREVENTER ENCLOSURE BY LEMEUR MANUFACTURING
13. FINISH GRADE
14. PVC MAINLINE SUPPLY TO VALVES

D REDUCED PRESSURE BACKFLOW PREVENTER

N.T.S.

NOTE: ALL ELECTRICAL WORK SHALL COMPLY W/ LOCAL AND NATIONAL CODES.

ELECTRICAL METER TO BE INSTALLED OPPOSITE SIDE IRRIGATION CONTROLLER PER MFG.'S SPECIFICATIONS.

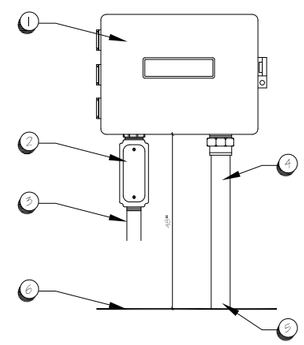

1. IRRIGATION CONTROLLER MOUNTED TO WALL. REFER TO IRRIGATION LEGEND, SHEET L-1 FOR CONTROLLER SPECIFICATIONS.
2. JUNCTION BOX BY GENERAL CONTRACTOR.
3. 110V WIRE AND CONDUIT TO ELECTRICAL CONNECTION BY GENERAL CONTRACTOR.
4. 2" CONDUIT AT MINIMUM 18" BELOW GRADE AND INSTALL TO 3' ON OUTSIDE WALL.
5. CONTROL WIRES TO REMOTE CONTROLLER VIA MAINLINE TRENCH.
6. FINISH GRADE.

E WALL MOUNTED CONTROLLER

N.T.S.

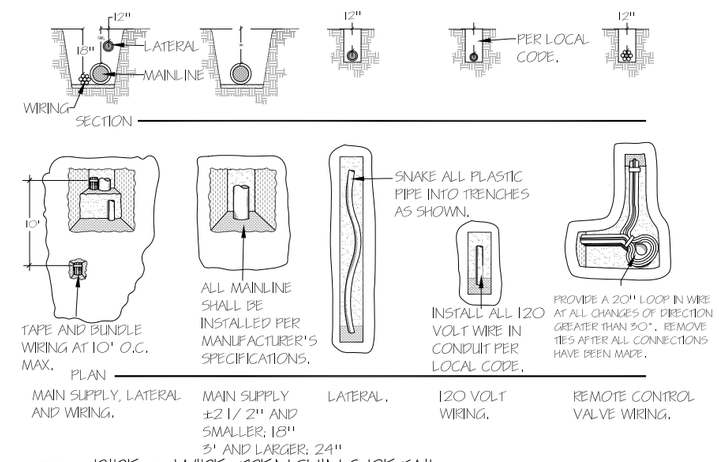

F PIPE & WIRE TRENCHING DETAIL

N.T.S.

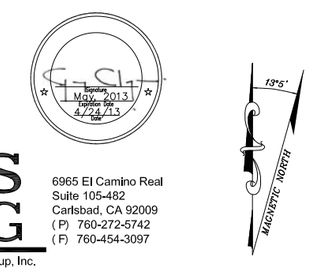

CS DG
CS Design Group, Inc.
6965 El Camino Real
Suite 105-482
Carlsbad, CA 92009
(P) 760-272-5742
(F) 760-454-3097

IRRIGATION DETAILS

SCALE: REFER TO DETAILS

CONNELL DESIGN GROUP, LLC
ENGINEERING AND DESIGN
26455 RANCHO PARKWAY SOUTH, LAKE FOREST, CA 92630
(949) 753-8807 OFFICE - (949) 753-8833 FAX

THOMAS RUSSELL SCHOOL JOINT USE PARK
CNU3828
1585 ROGER STREET
MILPITAS, CA 95035

at&t
4430 ROSEWOOD DRIVE, BLDG. # 3, 2ND FLOOR,
PLEASANTON, CA 94588

NO.	DATE	REVISIONS	BY	CHK	APP'D
3	07/02/13	UPDATED PER NEW RFDS	JPC	JPC	DC
2	05/09/13	ZDS FOR RESUBMITTAL	JPC	JPC	DC
1	04/25/13	ISSUED FOR PLANNING COMMENTS	JPC	JPC	DC
0	12/13/12	ZDS FOR SUBMITTAL	JPC	JPC	DC

SCALE: AS NOTED | DESIGNED BY: | DRAWN BY: JPC

TITLE SHEET

IRRIGATION DETAILS

JOB NUMBER	DRAWING NUMBER	SHEET NO.	REV
25736-635	AA-CNU3828	L03	1

CDG NO. CCU3828 — 22 x 34 "D" SIZE

Copyright © Bechtel Corporation 2011. This item contains confidential information proprietary to Bechtel that is not to be used, disclosed, or reproduced in any format by any non-Bechtel party without Bechtel's prior written permission. Notwithstanding the above, "AT&T Mobility" has the right to use the information contained in this document pursuant to Contract 25471 between Bechtel Corporation and "AT&T Mobility". All rights reserved.

PLANTING NOTES

1. ALL EXISTING PLANT MATERIAL WITHIN THE PROPERTY LINES AND WITHIN THE PROPERTY OWNER MAINTAINED RIGHT-OF-WAY LANDSCAPED PARKWAY AREA SHALL BE PROTECTED IN PLACE. UNLESS SPECIFICALLY INDICATED, NO PLANT MATERIAL SHALL BE REMOVED AS A PART OF THIS PERMINT. LANDSCAPE CONTRACTOR TO VERIFY EXISTING MATERIAL AT LOCATION OF PROPOSED ENCLOSURE AND MONOPOLE. ANY LANDSCAPING DAMAGED DURING CONSTRUCTION OF THE PROJECT SHALL BE REPAIRED AND/ OR REPLACED PRIOR TO FINAL INSPECTION SIGN-OFF.
2. ALL FERTILIZERS AND AMENDMENTS USED DURING PLANTING PREPARATION SHALL BE DERIVED FROM ORGANIC-BASED MATERIALS AS A BEST MANAGEMENT PRACTICE FOR STORM WATER SOURCE CONTROL. ORGANIC MULCH TO BE APPROVED BY OWNER'S REPRESENTATIVE AND DOCUMENTATION SHALL BE PROVIDED AND AVAILABLE TO THE LANDSCAPE INSPECTOR. NO SEWAGE SLUDGE IS ALLOWED.
3. A 3" DEEP LAYER OF APPROVED ORGANIC MULCH SHALL BE APPLIED TO COVER THE DISTURBED SOIL AFTER THE PLANTING IS COMPLETE.
4. THE SCOPE OF WORK INCLUDES FURNISHING ALL MATERIALS NECESSARY FOR THE INSTALLATION OF THE PLANTING, BACKFILL, IRRIGATION AND DRAINAGE WORK OUTLINED IN THESE DRAWINGS. ALL WORK SHALL BE PREFORMED BY PERSONS FAMILIAR WITH PLANTING WORK AND UNDER SUPERVISION OF A QUALIFIED PLANTING FOREMAN.
5. PLANT MATERIAL LOCATIONS MAY BE SUBJECT TO CHANGE BY THE LANDSCAPE ARCHITECT BEFORE THE MAINTENANCE PERIOD BEGINS.
6. BEFORE ANY PLANTING OCCURS, ALL PLANTED AREAS ARE TO HAVE BEEN GRADED IN AN ACCEPTABLE MANNER TO ASSURE POSITIVE DRAINAGE PER THE GRADING NOTES.
7. DIG PLANTING PITS 2 TIMES THE HEIGHT AND WIDTH OF THE ROOTBALL. BACKFILL PITS WITH 70% NATIVE ON SITE SOIL AND 30% NITROLIZED SHAVINGS OR EQUIVLANT. SAMPLE BACKFILL:
   - 70% NATIVE SOIL BY VOLUME
   - 30% NITROLIZED SHAVINGS OR EQUIVLANT
   - 16 LBS GRO-POWER PLUS, PER CUBIC YARD MIX
   - * OTHER AMENDMENTS PER SOIL ANALYSIS
8. IF APPLICABLE, ALL NEW TREES TO BE STAKED.

PLANT MATERIAL KEY

SYMBOL	BOTANICAL NAME	COMMON NAME	SIZE	COUNT
	PROPOSED SHRUBS			
PIT TOB	Pittosporum tobira	Pittosporum	5 Gal	13
RHA IND	Rhaphiolepis indica 'Springtime'	Indian Hawthorn	5 Gal	14
	PROPOSED VINES			
	Macfadyena unguis-cati	Yellow Trumpet Vines	5 Gal	14

LANDSCAPE NOTE

ALL TREES AND LANDSCAPING INSTALLED BY THE PROJECT OR PROVIDING SCREENING VALUE SHALL BE MAINTAINED IN A HEALTHY AND THRIVING MANNER FOR SCREENING PURPOSES OF THE PROPOSED MONO-TREE AND EQUIPMENT ENCLOSURE. IF ANY OF THE PROJECT INSTALLED TREES AND LANDSCAPING SHALL PERISH OR BE DESTROYED, THEN THE APPLICANT/ OPERATOR SHALL REPLACE IT IN KIND, SIZE, AND QUANTITY TO PROVIDE THE SAME SCREENING VALUE AS DETERMINED BY THE RESPONSIBLE PARTY.

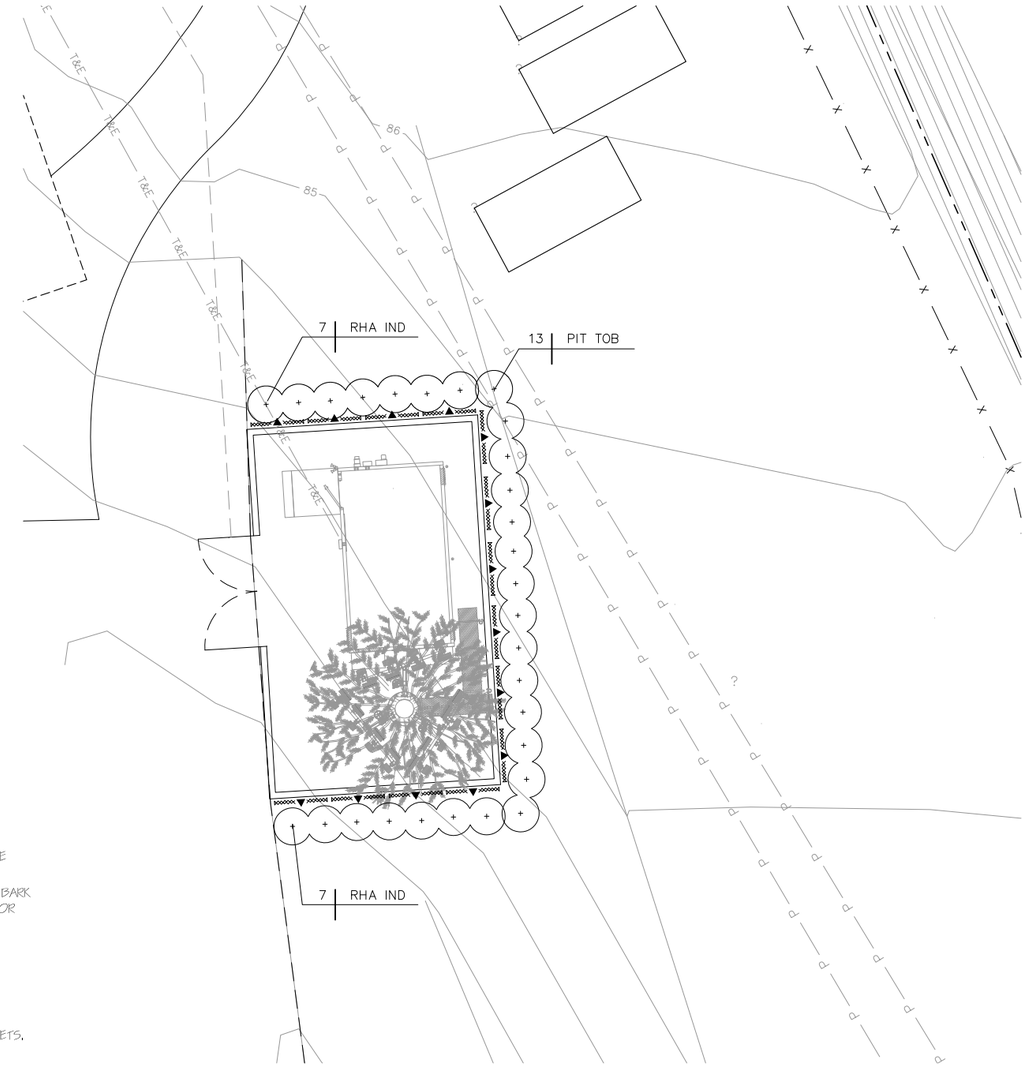

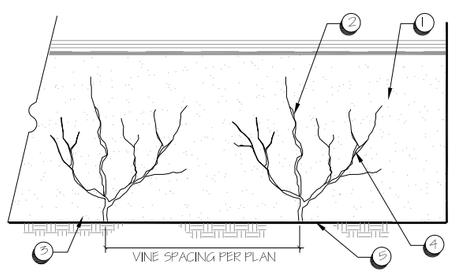

1. ADJACENT WALL OR FENCE.
2. SELF-CLIMBING VINE. REFER TO PLANTING PLAN FOR SPECIES.
3. FINISH GRADE.

NOTE:
1. SEPARATE INDIVIDUAL TENDRILS AND SPREAD ONTO ROUGH SURFACED WALL OR FENCE. SECURE TENDRILS TO SURFACE TO AID IN PROPER GROWTH.

A VINE - SELF CLIMBING
SCALE: 1/ 4" = 1'-0"

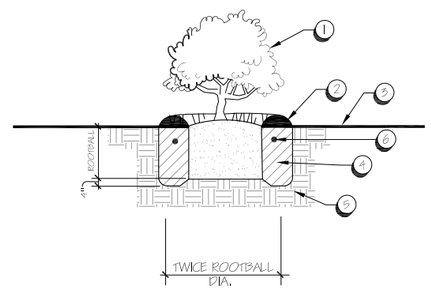

1. SET CROWN 1" ABOVE FINISH GRADE.
2. 2" DEEP BASIN WITH BARK MULCH (2" DEPTH) OR EQUAL.
3. FINISH GRADE.
4. AMENDED BACKFILL.
5. SET ROOTBALL ON UNDISTURBED SOIL.
6. 21 GRAM PLANT TABLETS.

NOTE:
1. SCARIFY SIDES OF PLANTING PIT.
2. ON SLOPES, PROVIDE SAUCER RIM ON DOWNHILL SIDES.

B SHRUB PLANTING
N.T.S.

CS DG
CS Design Group, Inc.
6965 El Camino Real
Suite 105-482
Carlsbad, CA 92009
(P) 760-272-5742
(F) 760-454-3097

PLANTING PLAN

SCALE: 1/8"=1'-0" (0 4' 8')

CDG
CONNELL DESIGN GROUP, LLC
ENGINEERING AND DESIGN
26455 RANCHO PARKWAY SOUTH, LAKE FOREST, CA 92630
(949) 753-8807 OFFICE - (949) 753-8833 FAX

THOMAS RUSSELL SCHOOL JOINT USE PARK
CNU3828
1585 ROGER STREET
MILPITAS, CA 95035

at&t
4430 ROSEWOOD DRIVE, BLDG. # 3, 2ND FLOOR,
PLEASANTON, CA 94588

NO.	DATE	REVISIONS	BY	CHK	APP'D
3	07/02/13	UPDATED PER NEW RFDS	JPC	JPC	DC
2	05/09/13	ZDS FOR RESUBMITTAL	JPC	JPC	DC
1	04/25/13	ISSUED FOR PLANNING COMMENTS	JPC	JPC	DC
0	12/13/12	ZDS FOR SUBMITTAL	JPC	JPC	DC

SCALE: AS NOTED | DESIGNED BY: | DRAWN BY: JPC

TITLE SHEET

PLANTING PLAN

JOB NUMBER	DRAWING NUMBER	SHEET NO.	REV
25736-635	AA-CNU3828	L04	1

CDG NO. CCU3828 — 22 x 34 "D" SIZE

Copyright © Bechtel Corporation 2011. This item contains confidential information proprietary to Bechtel that is not to be used, disclosed, or reproduced in any format by any non-Bechtel party without Bechtel's prior written permission. Notwithstanding the above, "AT&T Mobility" has the right to use the information contained in this document pursuant to Contract 25471 between Bechtel Corporation and "AT&T Mobility". All rights reserved.

SITE PHOTO SIMULATIONS

Proposed Wireless Telecommunications Facility

Site Location and Photo-Vantage Map

Image from GoogleMaps 2013©

Date:	6/21/13
Site:	CNU3828 Thomas Russell School Joint Use Park 1585 Roger Street Milipitas, CA 95035
Client:	AT&T 4430 Rosewood Drive, Bldg. #3, 2nd Floor Pleasanton, CA 94588
Contact:	Jennifer Hightower SAC Wireless 2211 13th Street Sacramento, California 95818 (916) 529-9467 Jennifer.Hightower@sacw.com
Prepared by:	Adrian Culici Graphic Detail Productions aculici@gdprod.com (323) 283-1358

Certificate of Authenticity / Disclaimer:

Graphic Detail Productions warrants that this photo simulation is an accurate representation of the proposed site based upon the project plans and additional information provided by the Applicant. The final constructed site may vary.

CONNELL DESIGN GROUP, LLC

Existing

Photo-simulation

View 1

Looking southeast from Diel Drive toward subject site.

CONNELL DESIGN GROUP, LLC

Graphic Detail Productions
1909 Del Paso Ave., Los Angeles, CA 90032
gdprod.com ~ ph 323.924.5895 ~ fx 323.230.9248

Date: *6/21/13*
Site Id: CNU3828 Thomas Russell School Joint Use Park

Address: *1585 Roger Street*
Milipitas, CA 95035

Existing

View 2

Looking northwest from Hillview Drive toward subject site.

Photo-simulation

CONNELL DESIGN GROUP, LLC

Graphic Detail Productions
1909 Del Paso Ave., Los Angeles, CA 90032
gdprod.com ~ ph 323.924.5895 ~ fx 323.230.9248

Date: *6/21/13*
Site Id: CNU3828 Thomas Russell School Joint Use Park

Address: *1585 Roger Street*
Milipitas, CA 95035