T-Mobile

T-MOBILE WEST CORPORATION, a DELAWARE CORPORATION
SAN FRANCISCO AREA NEW SITE DEVELOPMENT

1855 GATEWAY BLVD., 9TH FLOOR, CONCORD, CA 94520

SF04589A

SF589 JCT. I-680 G4

990 AMES AVENUE
MILPITAS, CA 95035

DIGALERT
800-227-2600
Call 2 Full Working Days In Advance

CODE COMPLIANCE

ALL WORK AND MATERIALS SHALL BE PERFORMED AND INSTALLED IN ACCORDANCE WITH THE CURRENT EDITIONS OF THE FOLLOWING CODES AS ADOPTED BY THE LOCAL GOVERNING AUTHORITIES. NOTHING IN THESE PLANS IS TO BE CONSTRUED TO PERMIT WORK NOT CONFORMING TO THESE CODES.

1. CALIFORNIA ADMINISTRATIVE CODES (INCL. TITLES 24 & 25) 2013
2. CALIFORNIA BUILDING CODE 2013
3. CALIFORNIA ELECTRICAL CODE 2013
4. CALIFORNIA MECHANICAL CODE 2013
5. CALIFORNIA PLUMBING CODE 2013
6. CALIFORNIA FIRE CODE 2013
7. LOCAL BUILDING CODE AMENDMENTS TO THE ABOVE.
8. CITY / COUNTY ORDINANCES

ALONG WITH ANY OTHER APPLICABLE LOCAL AND STATE LAWS AND REGULATIONS

HANDICAP REQUIREMENTS

FACILITY IS UNMANNED AND NOT FOR HUMAN HABITATION, ACCESSIBILITY ACCESS AND REQUIREMENTS ARE NOT REQUIRED, IN ACCORDANCE WITH CALIFORNIA BUILDING CODE, CODE OF REGULATIONS, TITLE 24, PART 2, VOLUME 1, CHAPTER 11B, DIVISION 2, SECTION 11B-203.5

PROJECT DESCRIPTION

THIS IS AN APPLICATION SET OF DRAWINGS TO MODIFY AN UNMANNED T-MOBILE SERVICES FACILITY TO ADD (3) L700 ANTENNA AND ASSOCIATED EQUIPMENT TO THE EXISTING SITE.

PROJECT TYPE: ☒ EQUIPMENT MODIFICATION ☐ CO-LOCATION ☐ RAWLAND ☐ TENANT IMPROVEMENT

EQUIPMENT LOCATION: ☒ OUTDOOR ☐ INDOOR ☐ ROOFTOP ☐ PRE-FABRICATED EQUIPMENT SHELTER

ANTENNA LOCATION: ☐ MONOPOLE ☒ ROOFTOP ☐ GUYED TOWER ☐ LATTICE TOWER ☐ ANTENNA POLE ☐ FLAG POLE

NUMBER OF ANTENNAS: (3) ANTENNAS, (6) DTMA, (3) RRU, & (6) DIPLEXERS

NUMBER OF CABINETS: (1) RADIO EQUIPMENT IN (E) LTE CABINET

DRIVING DIRECTIONS

FROM T-MOBILE OFFICE: CONCORD, CA

1. DEPART GATEWAY BLVD TOWARD CLAYTON RD
2. TURN RIGHT ONTO CLAYTON RD
3. TAKE RAMP FOR CA-242 S
4. TAKE RAMP FOR I-680 SOUTH TOWARD OAKLAND / SAN JOSE
5. TAKE RAMP RIGHT AND FOLLOW SIGNS FOR MONTAGUE EXPWY
6. TURN RIGHT ONTO S MILPITAS BLVD
7. TURN RIGHT ONTO AMES AVE

DESTINATION WILL BE ON THE RIGHT

SHEET INDEX

SHEET	DESCRIPTION
T-1	TITLE SHEET
T-2	GENERAL NOTES
A-1	SITE PLAN & ENLARGED EQUIPMENT PLANS
A-2	ENLARGED ANTENNA PLANS
A-3.1	ELEVATION
A-3.2	ELEVATION
A-3.3	ELEVATION
A-3.4	ELEVATION
A-4	DETAILS
E-1	ELECTRICAL DETAILS
G-1	GROUNDING PLANS
G-2	GROUNDING DETAILS

PROJECT TEAM

Architect:
BORGES ARCHITECTURAL GROUP, INC.
1478 STONE POINT DRIVE, SUITE 350
ROSEVILLE, CA 95661
contact: BRIAN K. WINSLOW
email: BRIAN@BORGESARCH.COM
ph: (916) 782-7200
fax: (916) 773-3037

Applicant / Lessee:
T-MOBILE
1855 GATEWAY BLVD., 9TH FLOOR
CONCORD, CA 94520
contact: RYAN WUNSCH
email: RYAN.WUNSCH1@T-MOBILE.COM
cell: (916) 670-0974

Site Aquisition:
FORZATELECOM
1330 NORTH BROADWAY, SUITE 202
WALNUT CREEK, CA 94596
contact: CHRIS COONES
email: CHRISCOONES@FORZATELECOM.COM
cell: (916) 716-1416

Zoning Manager:
FORZATELECOM
1330 NORTH BROADWAY, SUITE 202
WALNUT CREEK, CA 94596
contact: CHRIS COONES
email: CHRISCOONES@FORZATELECOM.COM
cell: (916) 716-1416

RF Engineer:
T-MOBILE
1855 GATEWAY BLVD., 9TH FLOOR
CONCORD, CA 94520
contact: JOE PHAN
e-mail: JOE.PHAN3@T-MOBILE.COM

Construction Manager:
T-MOBILE
1855 GATEWAY BLVD., 9TH FLOOR
CONCORD, CA 94520
contact: JAMES CRIST
email: JAMES.CRIST4@T-MOBILE.COM
ph: (707) 815-6478

PROJECT INFORMATION

Site Address: 990 AMES AVENUE
MILPITAS, CA 95035

A.P.N. Number: 086-31-050

Lattitude: 37°25' 11.55"

Longitude: -121°53" 8.35"

Elevation: 61'

Current Zoning: ----

Jurisdiction: CITY OF MILPITAS

Telephone: AT&T

Power: PG&E

Property Owner:
BMI PRODUCT OF NORTHERN CA, INC.
990 AMES AVENUE
MILPITAS, CA 95035
PH: (408)293-4008

POWER ORDER

POWER APPLICATION DATE: _____

POWER APPLICATION NUMBER: _____

VICINITY MAP

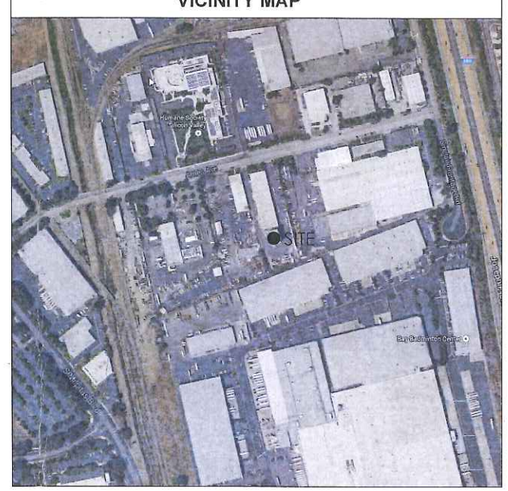

T-MOBILE APPROVALS

LANDLORD: _____

CONSTRUCTION MANAGER: _____

RF ENGINEER: _____

SITE AQUISITION MANAGER: _____

ZONING MANAGER: _____

UTILITY COORDINATOR: _____

NETWORK OPERATIONS MANAGER: _____

PROGRAM REGIONAL MANAGER: _____

T-Mobile
T-MOBILE WEST LLC,
a DELAWARE CORPORATION
SAN FRANCISCO AREA
NEW SITE DEVELOPMENT

1855 GATEWAY BLVD, 9TH FLOOR
CONCORD, CA 94520
(925) - 521 - 5597

PROJECT INFORMATION:

SF04589A

SF589 JCT. I-680 G4

990 AMES AVENUE
MILPITAS, CA 95035
CITY OF MILPITAS

CURRENT ISSUE DATE:

09/30/15

ISSUED FOR:

100% CD DRAWINGS

REV	DATE	DESCRIPTION	BY
0	04/30/15	90% CD SUBMITTAL	S.A.D.
1	05/24/15	100% CD SUBMITTAL	S.A.D.
2	05/24/15	100% CD REV1	S.A.D.

PROJECT ARCHITECT / ENGINEER:

ARCHITECTURE PLANNING INTERIORS
ARCHITECTURAL GROUP Borges
1478 STONE POINT DRIVE SUITE 350 ROSEVILLE CA 95661
T| 916 782 7200
F| 916 773 3037
BORGESARCH.COM

CONSULTANT:

FORZA TELECOM, Inc.
1330 North Broadway
Suite 202
Walnut Creek, CA 94596

DRAWN BY: S.A.D. | CHK.: B.K.W. | APV.: B.K.W.

LICENSER:

LICENSED ARCHITECT BERNARD SAWKIEWICZ No. C11635 Exp. 09-30-17 STATE OF CALIFORNIA

SHEET TITLE:

TITLE SHEET

SHEET NUMBER:

T-1

JOB NO.: T-15004-37

Print Date:09/30/2015 4:24:48 PM File Name:T-15004-Ames_FinalArch-V10-SF04589A-SF589 JCT. I-680 G4-Sheet-A1-1.1.dwg Plotted By:Scott Dunkels

GENERAL CONSTRUCTION NOTES

1. PLANS ARE INTENDED TO BE DIAGRAMATIC OUTLINE ONLY, UNLESS NOTED OTHERWISE. THE WORK SHALL INCLUDE FURNISHING MATERIALS, EQUIPMENT, APPURTENANCES AND LABOR NECESSARY TO COMPLETE ALL INSTALLATIONS AS INDICATED ON THE DRAWINGS.
2. THE CONTRACTOR SHALL OBTAIN, IN WRITING, AUTHORIZATION TO PROCEED BEFORE STARTING WORK ON ANY ITEM NOT CLEARLY DEFINED OR IDENTIFIED BY THE CONTRACT DOCUMENTS.
3. CONTRACTOR SHALL CONTACT USA (UNDERGROUND SERVICE ALERT) AT (800) 227-2600, FOR UTILITY LOCATIONS, 48 HOURS BEFORE PROCEEDING WITH ANY EXCAVATION, SITE WORK OR CONSTRUCTION.
4. THE CONTRACTOR SHALL INSTALL ALL EQUIPMENT AND MATERIALS IN ACCORDANCE WITH MANUFACTURER'S RECOOMENDATIONS UNLESS SPECIFICALLY INDICATED OTHERWISE, OR WHERE LOCAL CODES OR REGULATIONS TAKE PRECEDENCE.
5. ALL CONSTRUCTION SHALL BE IN ACCORDANCE WITH THE CBC / UBC'S REQUIREMENTS REGARDING EARTHQUAKE RESISTANCE, FOR, BUT NOT LIMITED TO, PIPING, LIGHT FIXTURES, CEILING GRID, INTERIOR PARTITIONS, AND MECHANICAL EQUIPMENT. ALL WORK MUST COMPLY WITH LOCAL EARTHQUAKE CODES AND REGULATIONS.
6. REPRESENTAIONS OF TRUE NORTH, OTHER THAN THOSE FOUND ON THE PLOT OF SURVEY DRAWINGS, SHALL NOT BE USED TO IDENTIFY OR ESTABLISH BEARING OF TRUE NORTH AT THE SITE. THE CONTRACTOR SHALL RELY SOLELY ON THE PLOT OF SURVEY DRAWING AND ANY SURVEYOR'S MARKINGS AT THE SITE FOR THE ESTABLISHMENT OF TRUE NORTH, AND SHALL NOTIFY THE ARCHITECT / ENGINEER PRIOR TO PROCEEDING WITH THE WORK IF ANY DESCREPANCY IS FOUND BETWEEN THE VARIOUS ELEMENTS OF THW WORKING DRAWINGS AND THE TRUE NORTH ORIENTATION AS DEPICTED ON THE CIVIL SURVEY. THE CONTRACTOR SHALL ASSUME SOLE LIABILITY FOR ANY FAILURE TO NOTIFY THE ARCHITECT / ENGINEER.
7. THE BUILDING DEPARTMENT ISSUING THE PERMITS SHALL BE NOTIFIED AT LEAST TWO WORKING DAYS PRIOR TO THE COMMENCMENT OF WORK, OR AS OTHERWISE STIPULATED BY THE CODE ENFORCEMENT OFFICIAL HAVING JURISDICTION.
8. DO NOT EXCAVATE OR DISTURB BEYOND THE PROPERTY LINES OR LEASE LINES, UNLESS OTHERWISE NOTED.
9. ALL EXISTING UTILITIES, FACILITIES, CONDITIONS, AND THEIR DIMENSIONS SHOWN ON THE PLAN HAVE BEEN PLOTTED FROM AVAILABLE RECORDS. THE ARCHITECT / ENGINEER AND THE OWNER ASSUME NO RESPONSIBILITY WHATSOEVER AS TO THE SUFFICIENCY OR THE ACCURACY OF THE INFORMATION SHOWN ON THE PLANS, OR THE MANNER OF THEIR REMOVAL OR ADJUSTMENT. CONTRACTORS SHALL BE RESPONSIBILE FOR DETERMINING EXACT LOCATION OF ALL EXISTING UTILITIES AND FACILITIES PRIOR TO START OF CONSTRUCTION. CONTRACTORS SHALL ALSO OBTAIN FROM EACH UTILITY COMPANY DETAILED INFORMATION RELATIVE TO WORKING SHEDULES AND METHODS OF REMOVING OR ADJUSTING EXISTING UTILITIES.
10. CONTRACTOR SHALL VERIFY ALL EXISTING UTILITIES, BOTH HORIZONTAL AND VERTICALLY, PRIOR TO THE START OF CONSTRUCTION. ANY DISCREPANCIES OR DOUBTS AS TO THE INTERRETATION OF PLANS SHOULD BE IMMEDIATELY REPORTED TO THE ARCHITECT / ENGINEER FOR RESOLUTION AND INSTRUCTION, AND NO FURTHER WORK SHALL BE PERFORMED UNTIL THE DESCREPANCY IS CHECKED AND CORRECTED BY THE ARCHITECT / ENGINEER. FAILURE TO SECURE SUCH INSTRUCTION MEANS CONTRACTOR WILL HAVE WORKED AT HIS/HER OWN RISK AND EXPENSE.
11. ALL NEW AND EXISTING UTILITY STRUCTURES ON SITE AND IN AREAS TO BE DISTURBED BY CONSTRUCTION SHALL BE ADJUSTED TO FINISH ELEVATIONS PRIOR TO FINAL INSPECTION OF WORK.
12. ANY DRAIN AND/OR FIELD TILE ENCOUNTERED / DISTURBED DURING CONTRUCTION SHALL BE RETURNED TO IT'S ORIGINAL CONDITION PRIOR TO COMPLETION OF WORK. SIZE, LOCATION AND TYPE OF ANY UNDERGROUND UTILITIES OR IMPROVEMENTS SHALL BE ACCURATELY NOTED AND PLACED ON "AS-BUILT" DRAWINGS BY GENERAL CONTRACTOR, AND ISSUED TO THE ARCHITECT / ENGINEER AT COMPLETION OF PROJECT.
13. ALL TEMPORARY EXCAVATIONS FOR THE INSTALLATION OF FOUNDATIONS, UTILITIES, ETC., SHALL BE PROPERLY LAID BACK OR BRACED IN ACCORDINACE WITH CORRECT OCCUPATIONAL SAFETY AND HEALTH ADMINISTRATION (OSHA) REQUIREMENTS.
14. INCLUDE MISC. ITEMS PER AT&T SPECIFICATIONS

GENERAL NOTES FOR EXISTING CELL SITES

1. PRIOR TO THE SUBMISSION OF BIDS, THE BIDDING SUBCONTRACTOR SHALL VISIT THE CELL SITE TO FAMILIARIZE WITH THE EXISTING CONDITIONS AND TO CONFIRM THAT THE WORK CAN BE ACCOMPLISHED AS SHOWN ON THE CONSTRUCTION DRAWINGS. ANY DISCREPANCY FOUND SHALL BE BROUGHT TO THE ATTENTION OF CONTRACTOR.
2. SUBCONTRACTOR SHALL VERIFY ALL EXISTING DIMENSIONS AND CONDITIONS PRIOR TO COMMENCING ANY WORK. ALL DIMENSIONS OF EXISTING CONSTRUCTION SHOWN ON THE DRAWINGS MUST BE VERIFIED. SUBCONTRACTOR SHALL NOTIFY THE CONTRACTOR OF ANY DISCREPANCIES PRIOR TO ORDERING MATERIAL OR PROCEEDING WITH CONSTRUCTION.
3. THE EXISTING CELL SITE IS IN FULL COMMERCIAL OPERATION. ANY CONSTRUCTION WORK BY SUBCONTRACTOR SHALL NOT DISRUPT THE EXISTING NORMAL OPERATION. ANY WORK ON EXISTING EQUIPMENT MUST BE COORDINATED WITH CONTRACTOR. ALSO, WORK SHOULD BE SCHEDULED FOR AN APPROPRIATE MAINTENANCE WINDOW USUALLY IN LOW TRAFFIC PERIODS AFTER MIDNIGHT.
4. SINCE THE CELL SITE IS ACTIVE, ALL SAFETY PRECAUTIONS MUST BE TAKEN WHEN WORKING AROUND HIGH LEVELS OF ELECTROMAGNETIC RADIATION. EQUIPMENT SHOULD BE SHUTDOWN PRIOR TO PERFORMING ANY WORK THAT COULD EXPOSE THE WORKERS TO DANGER. PERSONAL RF EXPOSURE MONITORS ARE ADVISED TO BE WORN TO ALERT OF ANY DANGEROUS EXPOSURE LEVELS.
5. SUBCONTRACTOR SHALL DETERMINE ACTUAL ROUTING OF CONDUIT, POWER AND T1 CABLES, GROUNDING CABLES AS SHOWN ON THE POWER, GROUNDING AND TELCO PLAN DRAWING. SUBCONTRACTOR SHALL UTILIZE EXISTING TRAYS AND/OR SHALL ADD NEW TRAYS AS NECESSARY. SUBCONTRACTOR SHALL CONFIRM THE ACTUAL ROUTING WITH THE CONTRACTOR.
6. SUBCONTRACTOR SHALL LEGALLY AND PROPERLY DISPOSE OF ALL SCRAP MATERIALS SUCH AS COAXIAL CABLES AND OTHER ITEMS REMOVED FROM THE EXISTING FACILITY. ANTENNAS REMOVED SHALL BE RETURNED TO THE OWNER'S DESIGNATED LOCATION.

APPLICABLE CODES, REGULATIONS AND STANDARDS:

SUBCONTRACTOR'S WORK SHALL COMPLY WITH ALL APPLICABLE NATIONAL, STATE, AND LOCAL CODES AS ADOPTED BY THE LOCAL AUTHORITY HAVING JURISDICTION (AHJ) FOR THE LOCATION.

THE EDITION OF THE AHJ ADOPTED CODES AND STANDARDS IN EFFECT ON THE DATE OF CONTRACT AWARD SHALL GOVERN THE DESIGN.

SUBCONTRACTOR'S WORK SHALL COMPLY WITH THE LATEST EDITION OF THE FOLLOWING STANDARDS:

- AMERICAN CONCRETE INSTITUTE (ACI) 318, BUILDING CODE REQUIREMENTS FOR STRUCTURAL CONCRETE
- AMERICAN INSTITUTE OF STEEL CONSTRUCTION (AISC), MANUAL OF STEEL CONSTRUCTION, ASD, NINTH EDITION
- TELECOMMUNICATIONS INDUSTRY ASSOCIATION (TIA) 222-F, STRUCTURAL STANDARD FOR STRUCTURAL ANTENNA TOWER AND ANTENNA SUPPORTING STRUCTURES
- INSTITUTE FOR ELECTRICAL AND ELECTRONICS ENGINEERS (IEEE) 81, GUIDE FOR MEASURING EARTH RESISTIVITY, GROUND IMPEDANCE, AND EARTH SURFACE POTENTIALS OF A GROUND SYSTEM IEEE 1100 (1999) RECOMMENDED PRACTICE FOR POWERING AND GROUNDING OF ELECTRICAL EQUIPMENT.
-IEEE C62.41, RECOMMENDED PRACTICES ON SURGE VOLTAGES IN LOW VOLTAGE AC POWER CIRCUITS (FOR LOCATION CATEGORY "C3" AND "HIGH SYSTEM EXPOSURE")

TIA 607 COMMERCIAL BUILDING GROUNDING AND BONDING REQUIREMENTS FOR TELECOMMUNICATIONS TELCORDIA GR-63 NETWORK EQUIPMENT-BUILDING SYSTEM (NEBS): PHYSICAL PROTECTION
TELCORDIA GR-347 CENTRAL OFFICE POWER WIRING
TELCORDIA GR-1275 GENERAL INSTALLATION REQUIREMENTS
TELCORDIA GR-1503 COAXIAL CABLE CONNECTIONS

ANY AND ALL OTHER LOCAL & STATE LAWS AND REGULATIONS

FOR ANY CONFLICTS BETWEEN SECTIONS OF LISTED CODES AND STANDARDS REGARDING MATERIAL, METHODS OF CONSTRUCTION, OR OTHER REQUIREMENTS, THE MOST RESTRICTIVE SHALL GOVERN. WHERE THERE IS CONFLICT BETWEEN A GENERAL REQUIREMENT AND A SPECIFIC REQUIREMENT, THE SPECIFIC REQUIREMENT SHALL GOVERN.

GENERAL TRENCHING NOTES

1. MAINTAIN 40" MINMUM COVER FOR ALL ELECTRICAL CONDUITS.
2. MAINTAIN 30" MINIMUM COVER FOR ALL TELECOMMUNICATIONS CONDUITS.
3. MINIMUM 1" SAN SHADING BELOW CONDUITS. AND 6" COVERING ON TOP OF CONDUITS REQUIRED.
4. ALL ELECTRICAL CONDUITS FROM POWER COMPANY FROM ANY POLE, TRANSFORMER OR OTHER LOCATIONS WILL BE SLURRY BACKFILLED.
5. IN STREET SLURRY TO GRADE AND MILL DOWN 1-1/2" FOR AC CAP.
6. IN DIRT SLURRY 18" FROM GRADE AND FILL 95% COMPACTION NATIVE SOIL FOR BALANCE
7. WARNING TAPE TO BE PLACED IN TRENCH 12" ABOVE ALL CONDUITS AND #18 WARNING TAPE ABOVE RING.

GENERAL GROUNDING NOTES

1. 5/8" x 8" ROD, CAD WELD BELOW GRADE
2. GROUND TESTED AT 5 OHMS OR LESS.
3. #5 GROUND AND BOND WIRE.
4. GROUNDS 3" FROM POLE.
5. PLACE 3 #10 GA WIRES FROM TESCO BREAKER TO PBMD OR STRONG BOX.
6. WOOD MOULDING, STAPLED EVERY 3" AND AT EACH END.

GENERAL CONDUIT NOTES

1. ALL CONDUITS WILL BE MANDRELED AND EQUIPPED WITH 3/8" PULL ROPE.
2. SCHEDULE 40 CONDUIT FOR UNDERGROUND USE.
3. SCHEDULE 80 CONDUIT FOR RISER USE.
4. 2" GALVANIZED STEEL CONDUIT FOR ANY CONDUIT UNDER 3", STUB UP 10" THEN CONVERT TO SCHEDULE 80.
5. CONVERT 4" SPRINT CONDUIT TO 3" AT BASE OF POLE.
6. CONTRACTOR TO STUB UP POLE 10" w/ 3" POWER CONDUIT. POWER COMPANY TO CONVERT FROM 3" STUB SCHEDULE 80 TO 2" SCHEDULE 80 FROM TOP OF STUB UP.

TYPICAL R.O.W. POLE CONSTRUCTION NOTES

1. CABLE NOT TO IMPEDE 15" CLEAR SPACE OFF POLE FACE.
2. ALL CLIMB STEPS NEXT TO CONDUIT SHALL HAVE EXTENDED STEPS.
3. NO BOLT THREADS TO PROTRUDE MORE THAN 1-1/2"
4. ALL HOLES IN POLE LEFT FROM REARRANGEMENT OF CLIBERS TO BE FILLED.
5. 90° SHORT SWEEPS UNDER ANTENNA ARM, ALL CABLES MUST TRANSITION ON THE INSIDE OR BOTTOM OF THE ARM (NO CABLE ON TOP OF ARM).
6. USE 90° CONNECTOR AT CABLE CONNECTION FOR OMNI DOWN ANTENNAS.
7. USE CABLE CLAMPS TO SECURE CAB;LE TO ARMS. PLACE 2" T-MOBILE CABLE I.D. TAGS ON BOTH SIDES OF ARMS.
8. USE 1/2" DIA. CABLE ON ANTENNAS UNLESS OTHERWISE SPECIFIED.
9. PLACE GPS ON ARM OF SOUTHERN SKY EXPOSURE AT MINIMUM 6" FROM TRANSMIT ANTENNA WHICH IS 24" AWAY FROM CENTER OF POLE.
10. FILL VOID AROUND CABLES AT CONDUIT OPENING WITH FOAM SEALANT TO PREVENT WATER INTRUSION.

TYPICAL SIGNAGE

2

1. POST NOTICE RF COMPLIANCESIGN AT ROOF HATCH

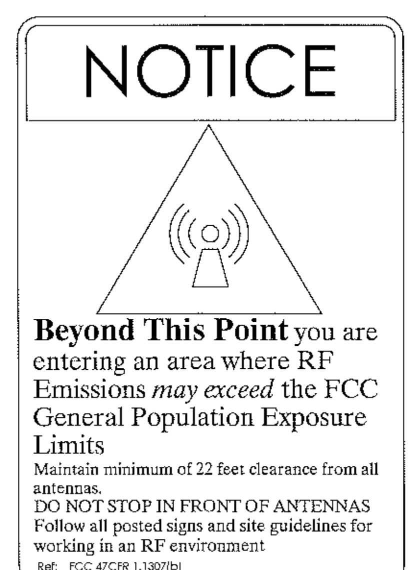

T-Mobile

T-MOBILE WEST LLC.
a DELAWARE CORPORATION
SAN FRANCISCO AREA
NEW SITE DEVELOPMENT

1855 GATEWAY BLVD, 9TH FLOOR
CONCORD, CA 94520
(925) - 521 - 5597

PROJECT INFORMATION:

SF04589A

SF589 JCT. I-680 G4

990 AMES AVENUE
MILPITAS, CA 95035
CITY OF MILPITAS

CURRENT ISSUE DATE:

09/30/15

ISSUED FOR:

100% CD DRAWINGS

REV	DATE	DESCRIPTION	BY
0	04/30/15	90% CD SUBMITTAL	S.A.D.
1	05/24/15	100% CD SUBMITTAL	S.A.D.
2	05/24/15	100% CD REV1	S.A.D.

PROJECT ARCHITECT / ENGINEER:

ARCHITECTURE PLANNING INTERIORS
Borges ARCHITECTURAL GROUP

CONSULTANT:

FORZATELECOM, INC.
1330 North Broadway
Suite 202
Walnut Creek, CA 94596

DRAWN BY:	CHK.:	APV.:
S.A.D.	B.K.W.	B.K.W.

LICENSER:

LICENSED ARCHITECT
RICHARD SAMBUCETTI
No. C11535
Ren. 09-30-17
STATE OF CALIFORNIA

SHEET TITLE:

GENERAL NOTES

SHEET NUMBER:

T-2

Job No.: T-15004-37

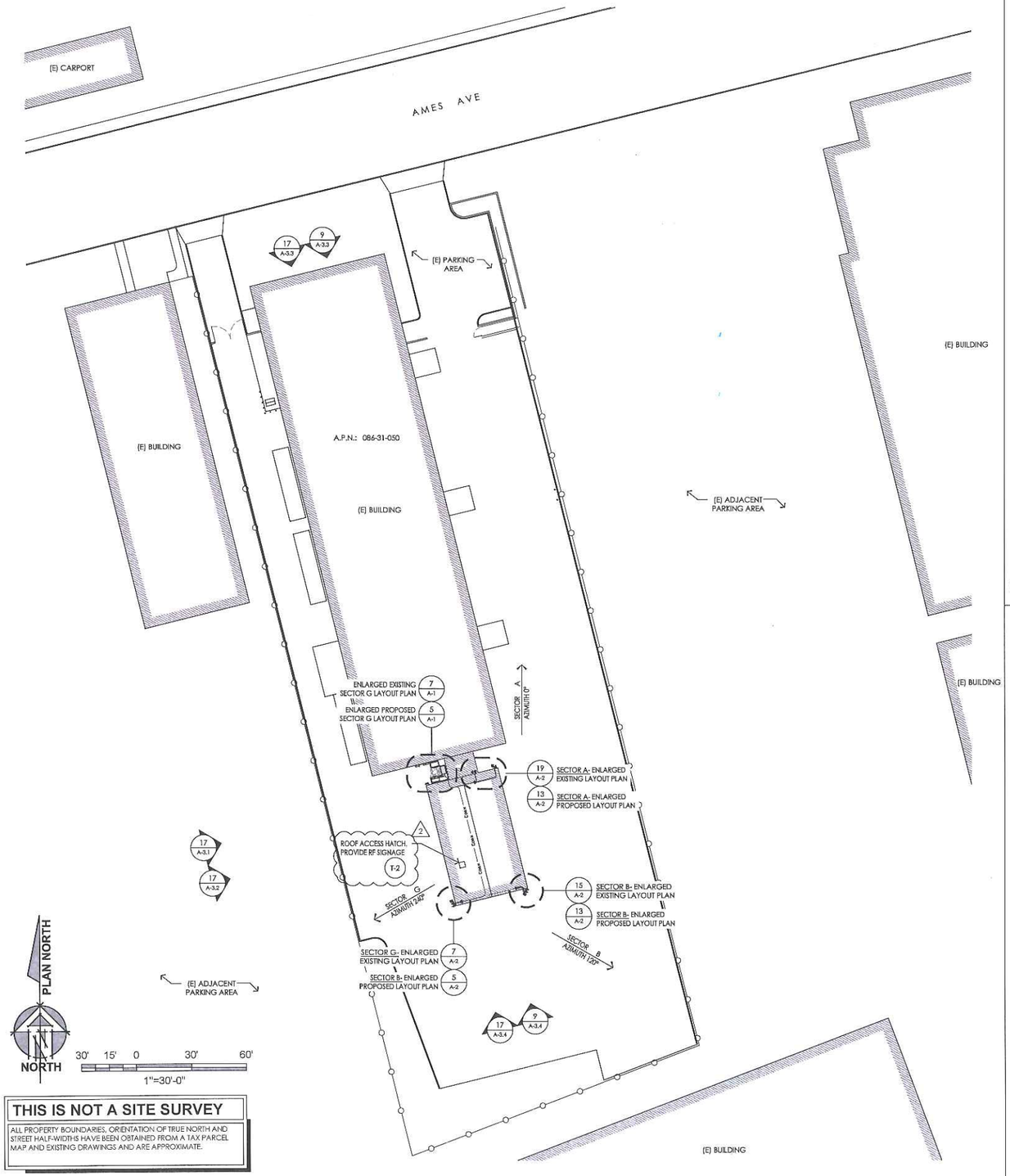

THIS IS NOT A SITE SURVEY

ALL PROPERTY BOUNDARIES, ORIENTATION OF TRUE NORTH AND STREET HALF-WIDTHS HAVE BEEN OBTAINED FROM A TAX PARCEL MAP AND EXISTING DRAWINGS AND ARE APPROXIMATE.

17 SITE PLAN
1"= 30'-0"

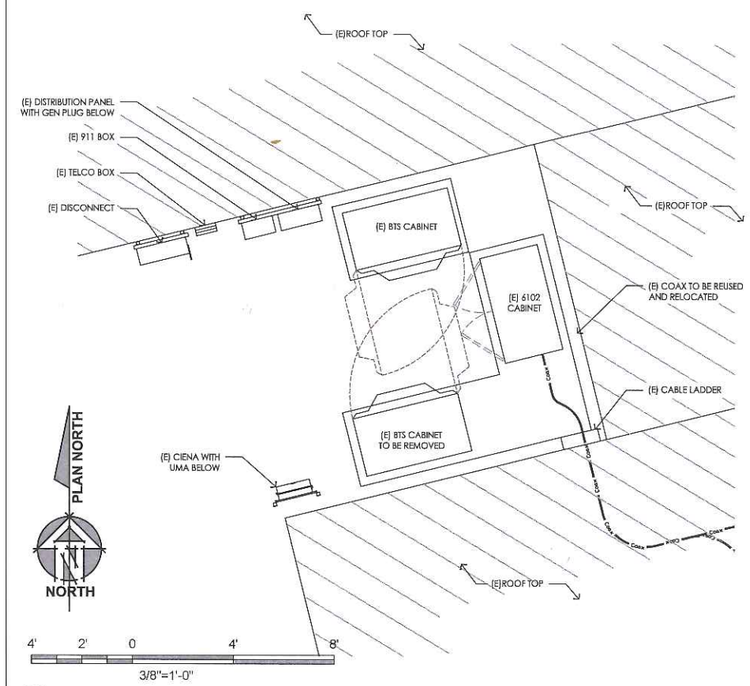

7 ENLARGED EXISTING EQUIPMENT PLAN
3/8" = 1'-0"

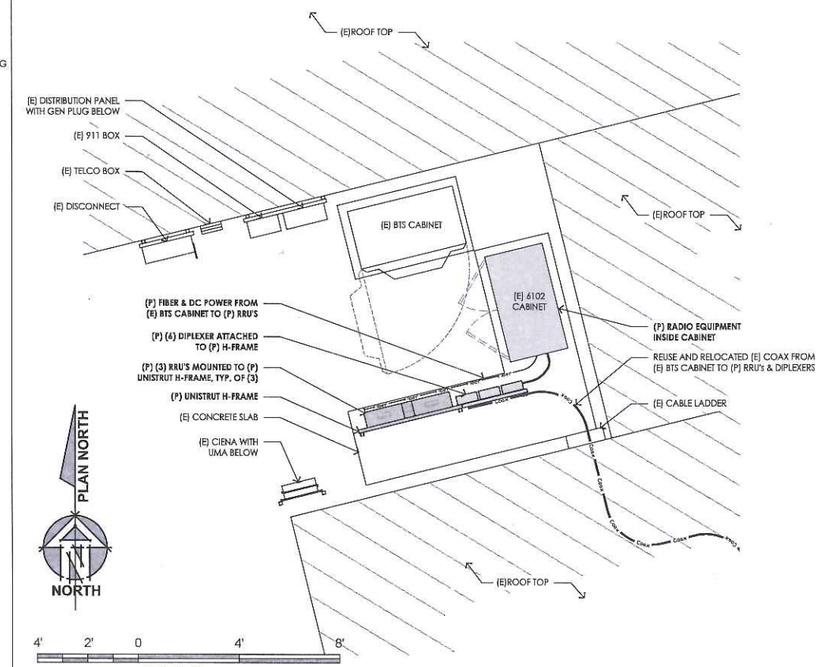

5 ENLARGED PROPOSED EQUIPMENT PLAN
3/8" = 1'-0"

T-Mobile

T-MOBILE WEST LLC,
a DELAWARE CORPORATION
SAN FRANCISCO AREA
NEW SITE DEVELOPMENT

1855 GATEWAY BLVD, 9TH FLOOR
CONCORD, CA 94520
(925) - 521 - 5597

PROJECT INFORMATION:

SF04589A

SF589 JCT. I-680 G4

990 AMES AVENUE
MILPITAS, CA 95035
CITY OF MILPITAS

CURRENT ISSUE DATE:

09/30/15

ISSUED FOR:

100% CD DRAWINGS

REV	DATE	DESCRIPTION	BY
0	04/30/15	90% CD SUBMITTAL	S.A.D.
1	05/24/15	100% CD SUBMITTAL	S.A.D.
2	05/24/15	100% CD REV1	S.A.D.

PROJECT ARCHITECT / ENGINEER:

ARCHITECTURE PLANNING INTERIORS
ARCHITECTURAL GROUP Borges
1478 STONE POINT DRIVE
SUITE 350
ROSEVILLE CA 95661
T| 916 782 7200
F| 916 773 2627
BORGESARCH.COM

CONSULTANT:

FORZA TELECOM, Inc.
1330 North Broadway
Suite 202
Walnut Creek, CA 94596

DRAWN BY:	CHK.:	APV.:
S.A.D.	B.K.W.	B.K.W.

LICENSER:

LICENSED ARCHITECT RICHARD SAWASHITA No. C11535 Exp. 09-30-17 STATE OF CALIFORNIA

SHEET TITLE:

SITE PLAN & ENLARGED EQUIPMENT PLANS

SHEET NUMBER:

A-1

Job No.: T-15004-37

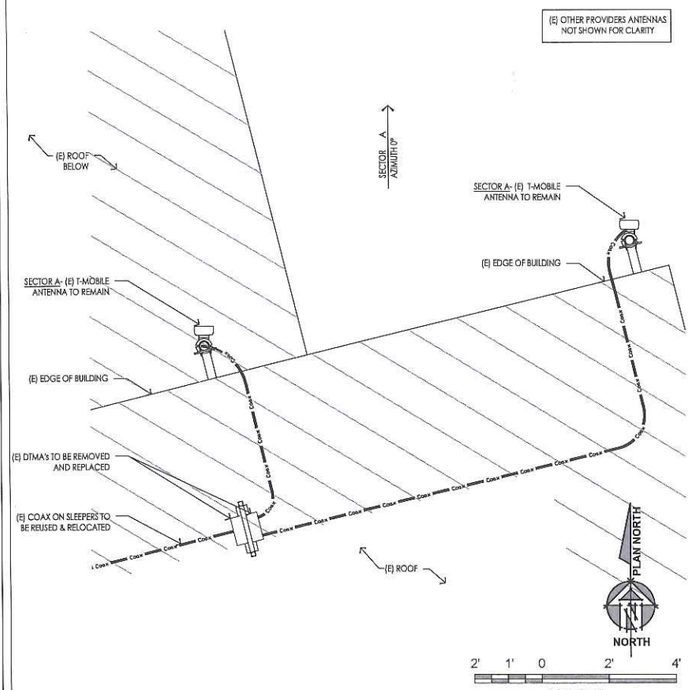

19 ENLARGED EXISTING SECTOR A PLAN
1/2" = 1'-0"

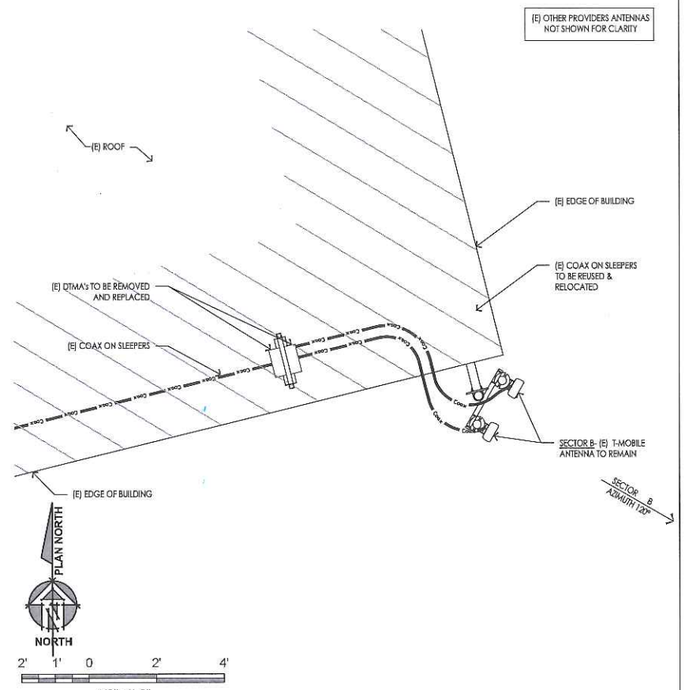

15 ENLARGED EXISTING SECTOR B PLAN
1/2" = 1'-0"

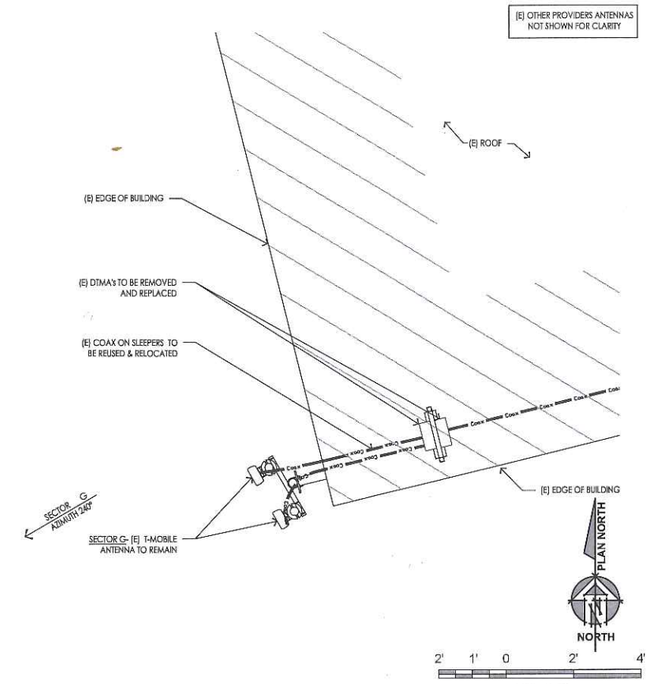

7 ENLARGED EXISTING SECTOR G PLAN
1/2" = 1'-0"

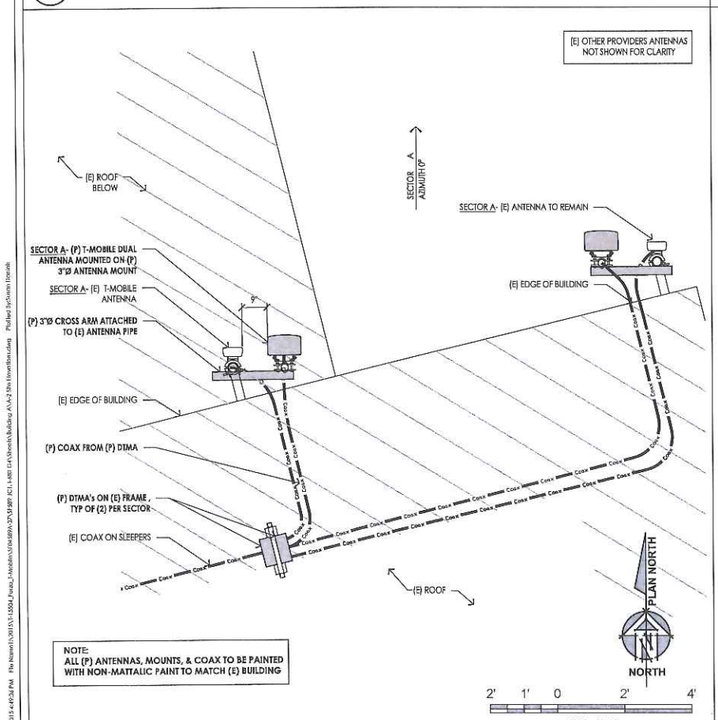

NOTE:
ALL (P) ANTENNAS, MOUNTS, & COAX TO BE PAINTED WITH NON-MATTALIC PAINT TO MATCH (E) BUILDING

17 ENLARGED PROPOSED SECTOR A PLAN
1/2" = 1'-0"

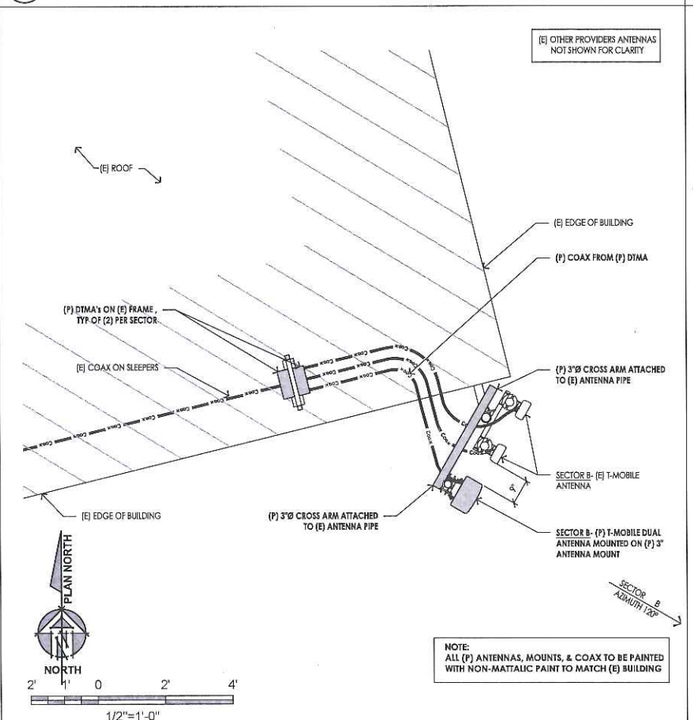

NOTE:
ALL (P) ANTENNAS, MOUNTS, & COAX TO BE PAINTED WITH NON-MATTALIC PAINT TO MATCH (E) BUILDING

13 ENLARGED PROPOSED SECTOR B PLAN
1/2" = 1'-0"

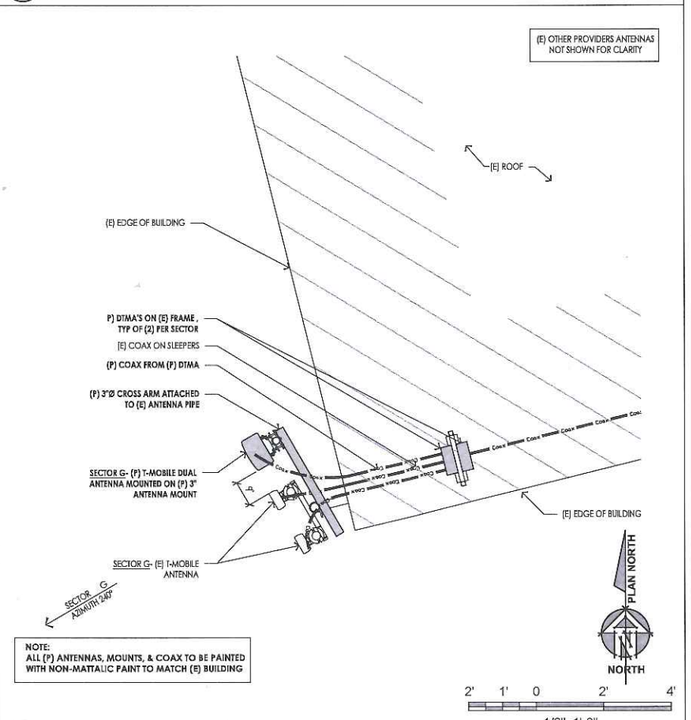

NOTE:
ALL (P) ANTENNAS, MOUNTS, & COAX TO BE PAINTED WITH NON-MATTALIC PAINT TO MATCH (E) BUILDING

5 ENLARGED PROPOSED SECTOR G PLAN
1/2" = 1'-0"

T-Mobile

T-MOBILE WEST L.L.C.
a DELAWARE CORPORATION
SAN FRANCISCO AREA
NEW SITE DEVELOPMENT

1855 GATEWAY BLVD, 9TH FLOOR
CONCORD, CA 94520
(925) - 521 - 5597

PROJECT INFORMATION:

SF04589A

SF589 JCT. I-680 G4

990 AMES AVENUE
MILPITAS, CA 95035
CITY OF MILPITAS

CURRENT ISSUE DATE:

09/30/15

ISSUED FOR:

100% CD DRAWINGS

REV	DATE	DESCRIPTION	BY
0	04/30/15	90% CD SUBMITTAL	S.A.D.
1	05/24/15	100% CD SUBMITTAL	S.A.D.
2	05/24/15	100% CD REV1	S.A.D.

PROJECT ARCHITECT / ENGINEER:

ARCHITECTURE PLANNING INTERIORS
ARCHITECTURAL GROUP Borges
1496 STONE POINT DRIVE
SUITE 200
ROSEVILLE, CA. 95661
T:916 782 2580
F:916 772 2027
BORGESARCH.COM

CONSULTANT:

FORTA TELECOM, Inc.
1330 North Broadway
Suite 202
Walnut Creek, CA 94596

DRAWN BY:	CHK.:	APV.:
S.A.D.	B.K.W.	B.K.W.

LICENSER:

LICENSED ARCHITECT
RICARDO SANDOVAL
No. C11535
Exp. 09-30-17
STATE OF CALIFORNIA

SHEET TITLE:

ENLARGED ANTENNA PLANS

SHEET NUMBER:

A-2

JOB NO.: T15004-37

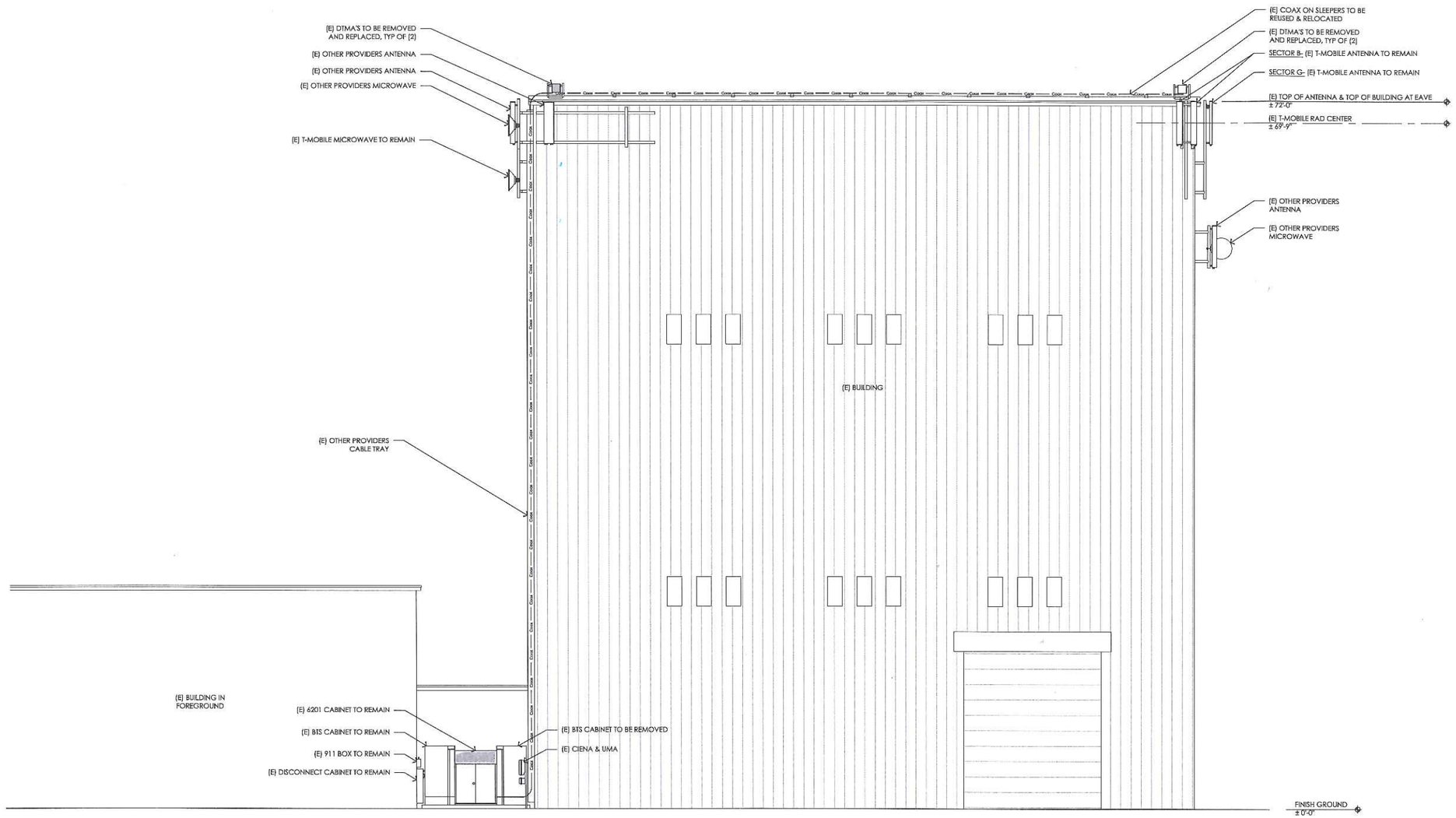

17 EXISTING WEST ELEVATION
3/16" = 1'-0"

T-Mobile

T-MOBILE WEST LLC.
a DELAWARE CORPORATION
SAN FRANCISCO AREA
NEW SITE DEVELOPMENT

1855 GATEWAY BLVD, 9TH FLOOR
CONCORD, CA 94520
(925) - 521 - 5597

PROJECT INFORMATION:

SF04589A

SF589 JCT. I-680 G4

990 AMES AVENUE
MILPITAS, CA 95035
CITY OF MILPITAS

CURRENT ISSUE DATE:

09/30/15

ISSUED FOR:

100% CD DRAWINGS

REV	DATE	DESCRIPTION	BY
0	04/30/15	90% CD SUBMITTAL	S.A.D.
1	05/24/15	100% CD SUBMITTAL	S.A.D.
2	05/24/15	100% CD REV1	S.A.D.

PROJECT ARCHITECT / ENGINEER:

ARCHITECTURE PLANNING INTERIORS
ARCHITECTURAL GROUP
Borges
1478 STONE POINT DRIVE
SUITE 200
ROSEVILLE CA 95661
T: 916 780 7500
F: 916 773 3607
BORGESARCH.COM

CONSULTANT:

FORZA TELECOM, Inc.
1330 North Broadway
Suite 202
Walnut Creek, CA 94596

DRAWN BY:	CHK.:	APV.:
S.A.D.	B.K.W.	B.K.W.

LICENSER:

LICENSED ARCHITECT
RICHARD SAMBUCETTI
No. C11535
Rev. 09-30-17
STATE OF CALIFORNIA

SHEET TITLE:

ELEVATIONS

SHEET NUMBER:

A-3.1

Job No.: T-15004-37

NOTE:
ALL (P) ANTENNAS, MOUNTS, & COAX TO BE PAINTED WITH NON-MATTALIC PAINT TO MATCH (E) BUILDING

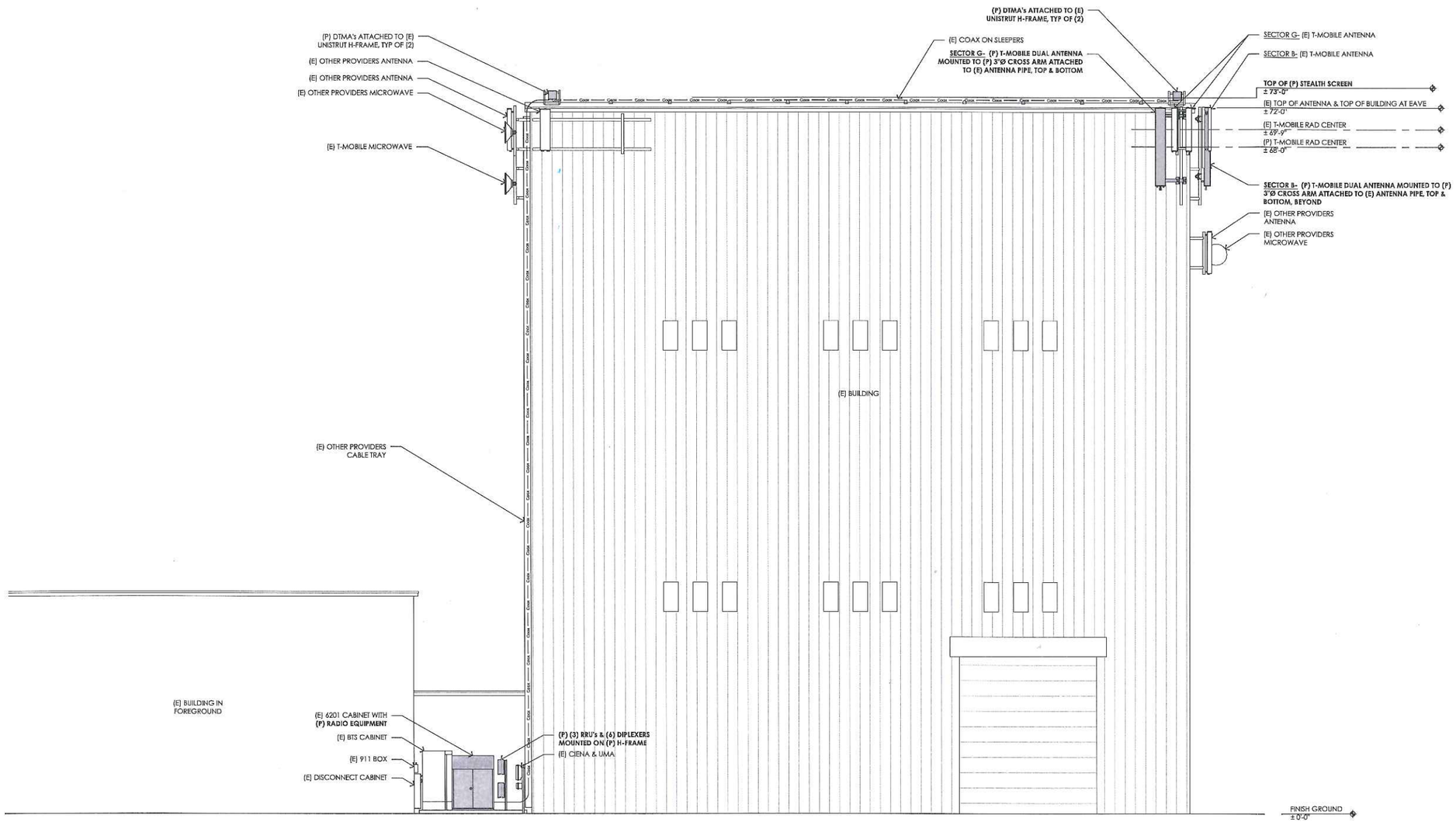

17 PROPOSED WEST ELEVATION
3/16" = 1'-0"

T-Mobile

T-MOBILE WEST LLC,
a DELAWARE CORPORATION
SAN FRANCISCO AREA
NEW SITE DEVELOPMENT

1855 GATEWAY BLVD, 9TH FLOOR
CONCORD, CA 94520
(925) - 521 - 5597

PROJECT INFORMATION:

SF04589A

SF589 JCT. I-680 G4

990 AMES AVENUE
MILPITAS, CA 95035
CITY OF MILPITAS

CURRENT ISSUE DATE:

09/30/15

ISSUED FOR:

100% CD DRAWINGS

REV	DATE	DESCRIPTION	BY
0	04/30/15	90% CD SUBMITTAL	S.A.D.
1	05/24/15	100% CD SUBMITTAL	S.A.D.
2	05/24/15	100% CD REV1	S.A.D.

PROJECT ARCHITECT / ENGINEER:

ARCHITECTURE PLANNING INTERIORS
ARCHITECTURAL GROUP Borges
1498 STONE POINT DRIVE
SUITE 350
ROSEVILLE CA 95661
T: 916 783 7200
F: 916 773 3637
BORGESARCH.COM

CONSULTANT:

FORTA TELECOM, Inc.
1330 North Broadway
Suite 202
Walnut Creek, CA 94596

DRAWN BY:	CHK.:	APV.:
S.A.D.	B.K.W.	B.K.W.

LICENSER:

LICENSED ARCHITECT RICHARD SAMBUCETTI No. C11535 Rev. 09-30-17 STATE OF CALIFORNIA

SHEET TITLE:

ELEVATIONS

SHEET NUMBER:

A-3.2

Job No.: T-15004-37

NOTE:
ALL (P) ANTENNAS, MOUNTS, & COAX TO BE PAINTED WITH NON-MATTALIC PAINT TO MATCH (E) BUILDING

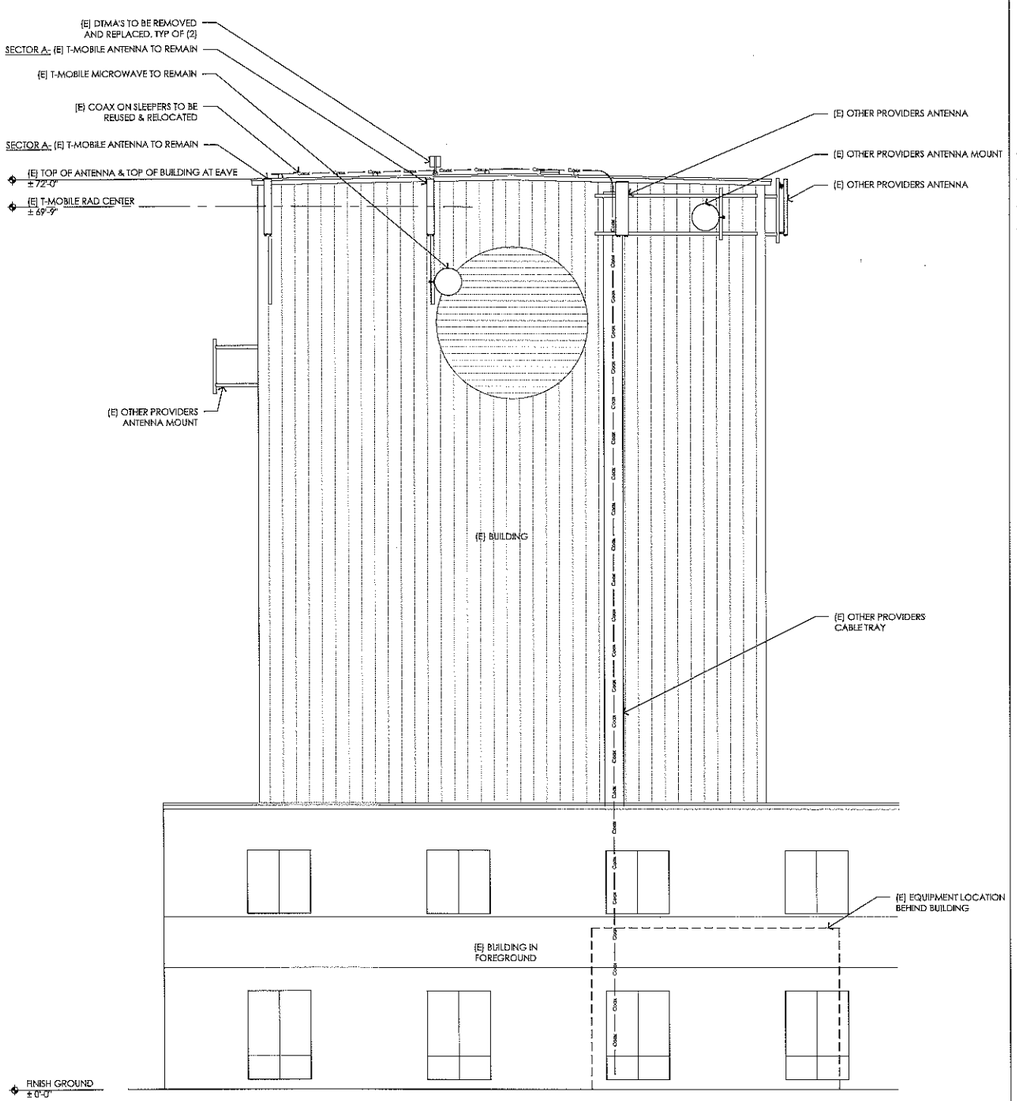

17 EXISTING NORTH ELEVATION
3/16" = 1'-0"

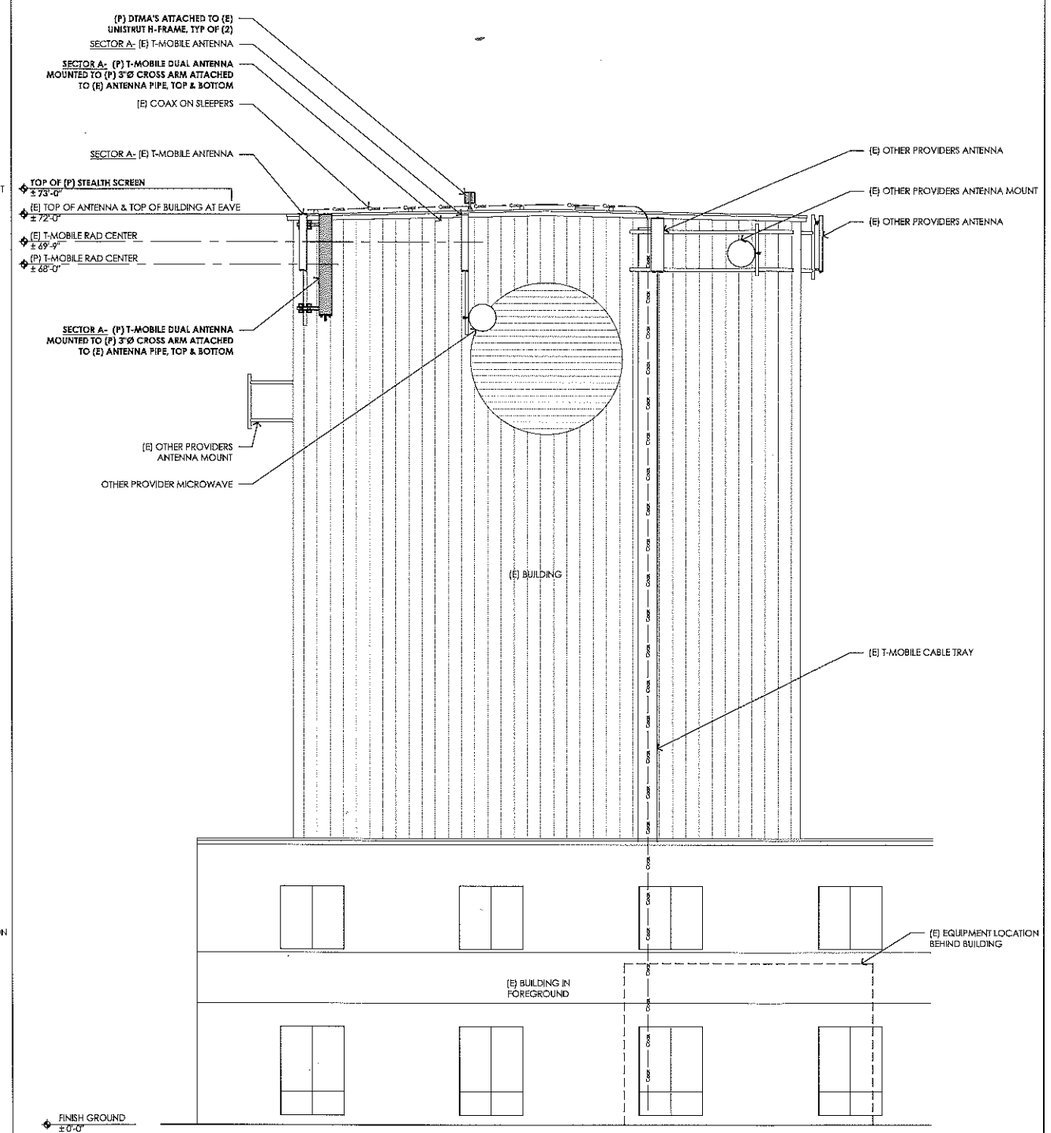

9 PROPOSED NORTH ELEVATION
3/16" = 1'-0"

T-Mobile

T-MOBILE WEST LLC,
a DELAWARE CORPORATION
SAN FRANCISCO AREA
NEW SITE DEVELOPMENT

1855 GATEWAY BLVD, 9TH FLOOR
CONCORD, CA 94520
(925) - 521 - 5597

PROJECT INFORMATION:

SF04589A

SF589 JCT. I-680 G4

990 AMES AVENUE
MILPITAS, CA 95035
CITY OF MILPITAS

CURRENT ISSUE DATE:

09/30/15

ISSUED FOR:

100% CD DRAWINGS

REV	DATE	DESCRIPTION	BY
0	04/30/15	90% CD SUBMITTAL	S.A.D.
1	05/24/15	100% CD SUBMITTAL	S.A.D.
2	05/24/15	100% CD REV1	S.A.D.

PROJECT ARCHITECT / ENGINEER:

ARCHITECTURAL GROUP
Borges
ARCHITECTURE PLANNING INTERIORS
1470 STONE POINT DRIVE
SUITE 300
ROSEVILLE CA 95661
T 916 780 7500
F 916 773 3207
BORGESARCH.COM

CONSULTANT:

FORTATELSCOM, Inc.
1330 North Broadway
Suite 202
Walnut Creek, CA 94596

DRAWN BY: CHK.: APV.:

S.A.D.	B.K.W.	B.K.W.

LICENSER:

LICENSED ARCHITECT
RICHARD SANDUCCI
No. C11535
Rev. 09-30-17
STATE OF CALIFORNIA

SHEET TITLE:

ELEVATIONS

SHEET NUMBER:

A-3.3

Job No.: T-15004-37

NOTE:
ALL (P) ANTENNAS, MOUNTS, & COAX TO BE PAINTED WITH NON-MATTALIC PAINT TO MATCH (E) BUILDING

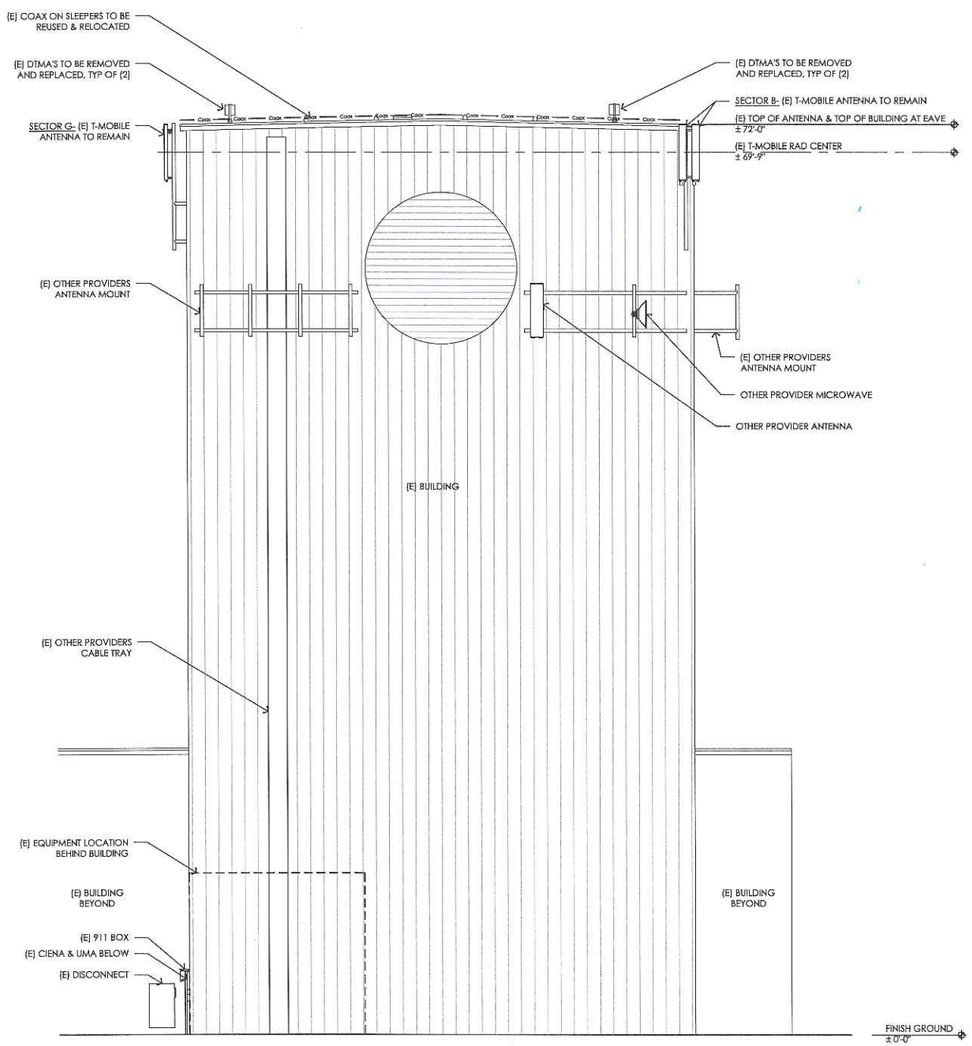

17 EXISTING SOUTH ELEVATION
3/16" = 1'-0"

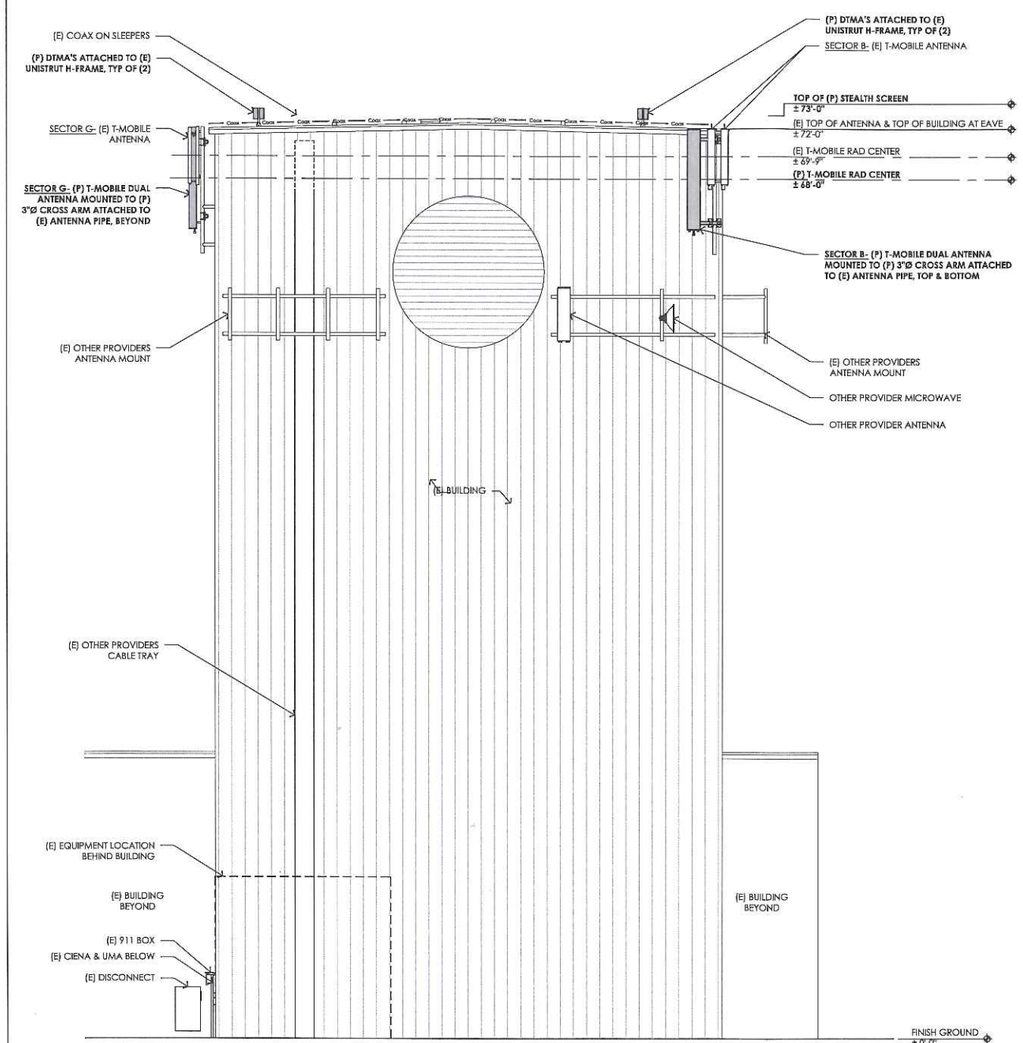

9 PROPOSED SOUTH ELEVATION
3/16" = 1'-0"

T-Mobile

T-MOBILE WEST LLC,
a DELAWARE CORPORATION
SAN FRANCISCO AREA
NEW SITE DEVELOPMENT

1855 GATEWAY BLVD, 9TH FLOOR
CONCORD, CA 94520
(925) - 521 - 5597

PROJECT INFORMATION:

SF04589A

SF589 JCT. I-680 G4

990 AMES AVENUE
MILPITAS, CA 95035
CITY OF MILPITAS

CURRENT ISSUE DATE:

09/30/15

ISSUED FOR:

100% CD DRAWINGS

REV	DATE	DESCRIPTION	BY
0	04/30/15	90% CD SUBMITTAL	S.A.D.
1	05/24/15	100% CD SUBMITTAL	S.A.D.
2	05/24/15	100% CD REV1	S.A.D.

PROJECT ARCHITECT / ENGINEER:

ARCHITECTURE PLANNING INTERIORS
ARCHITECTURAL GROUP Borges
1478 STONE POINT DRIVE
SUITE 350
ROSEVILLE CA 95661
T: 916 782 7288
F: 916 772 3227
BORGESARCH.COM

CONSULTANT:

FORZA TELECOM, inc.
1330 North Broadway
Suite 202
Walnut Creek, CA 94596

DRAWN BY:	CHK.:	APV.:
S.A.D.	B.K.W.	B.K.W.

LICENSER:

LICENSED ARCHITECT RICHARD SAUBUCETTI No. C11535 Rev. 09-30-17 STATE OF CALIFORNIA

SHEET TITLE:

ELEVATIONS

SHEET NUMBER:

A-3.4

Job No.: T-15004-37

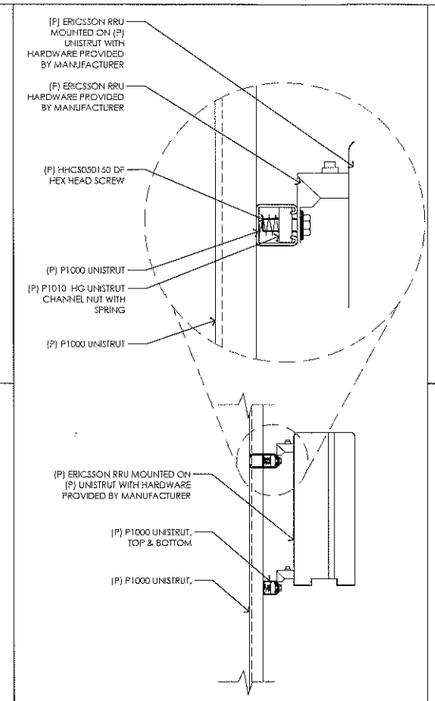

11 RRU MOUNTING TO H FRAME
1 1/2" = 1'-0"

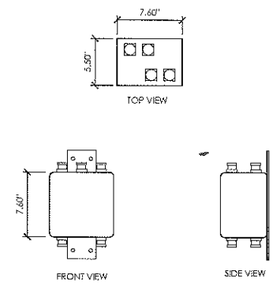

8 DTMA SPECIFICATION
1 1/2" = 1'-0"

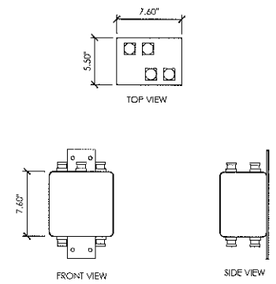

7 STYLE 3 DTMA SPECIFICATION
1 1/2" = 1'-0"

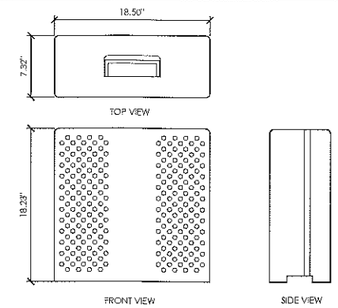

4 RRU SPECIFICATION
1 1/2" = 1'-0"

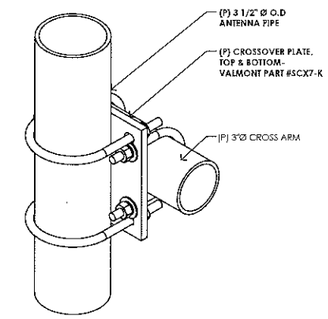

3 ANTENNA MAST CONNECTION DETAIL
3" = 1'-0"

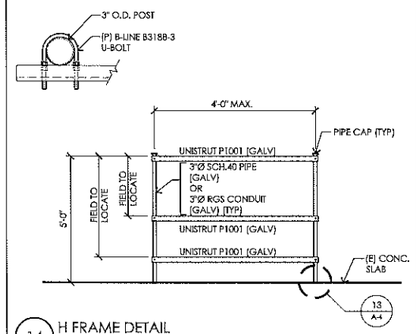

14 H FRAME DETAIL
3/8" = 1'-0"

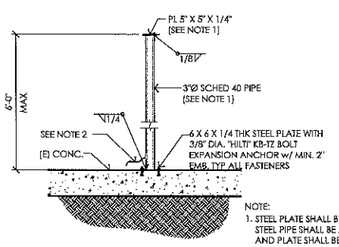

NOTE:
1. STEEL PLATE SHALL BE ASTM A36. STEEL PIPE SHALL BE ASTM A53. PIPE AND PLATE SHALL BE HOT DIPPED GALVANIZED.
2. GROUND WITH #2 AWG TINNED BARE COPPER WIRE EXOTHERMIC ALLY BONDED TO POST AND CONNECT TO GROUND RING.

13 UNISTRUT PIPE SUPPORT FOOTING
1/2" = 1'-0"

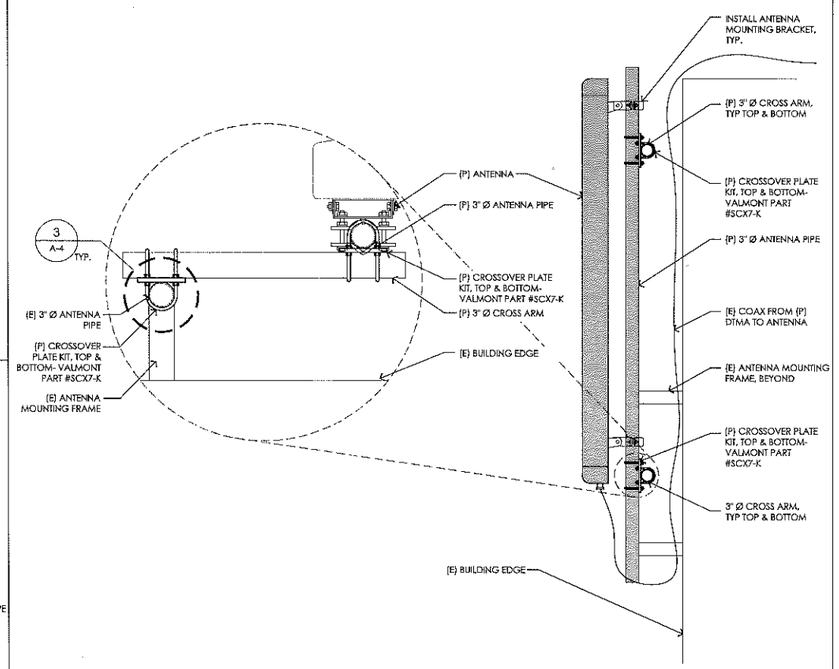

9 PROPOSED ANTENNA MOUNTING DETAIL
3/4" = 1'-0"

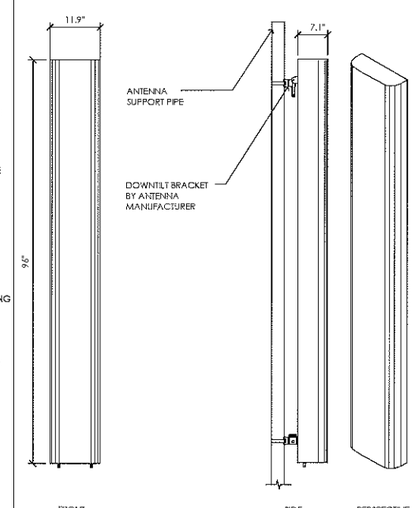

COMMSCOPE LNX-6515DS-A1M

DIMENSIONS:

HEIGHT:	2438mm (96.0")
WIDTH:	301mm (11.9")
DEPTH:	181mm (7.1")
WEIGHT:	43.7 lbs
CONNECTOR:	(2) 7/16 DIN FEMALE

1 PROPOSED ANTENNA SPECIFICATION
3/4" = 1'-0"

T-Mobile

T-MOBILE WEST LLC.
a DELAWARE CORPORATION
SAN FRANCISCO AREA
NEW SITE DEVELOPMENT

1855 GATEWAY BLVD, 9TH FLOOR
CONCORD, CA 94520
(925) - 521 - 5597

PROJECT INFORMATION:

SF04589A

SF589 JCT. I-680 G4

990 AMES AVENUE
MILPITAS, CA 95035
CITY OF MILPITAS

CURRENT ISSUE DATE:

09/30/15

ISSUED FOR:

100% CD DRAWINGS

REV	DATE	DESCRIPTION	BY
0	04/30/15	90% CD SUBMITTAL	S.A.D.
1	05/24/15	100% CD SUBMITTAL	S.A.D.
2	09/24/15	100% CD REV1	S.A.D.

PROJECT ARCHITECT / ENGINEER:

Borges ARCHITECTURAL GROUP
ARCHITECTURE PLANNING INTERIORS
1676 STONE POINT DRIVE, SUITE 300
ROSEVILLE, CA 95661
T:916.782.7300 F:916.773.3027
BORGESARCH.COM

CONSULTANT:

FORTA TELECOM, Inc.
1330 North Broadway
Suite 202
Walnut Creek, CA 94596

DRAWN BY:	CHK.:	APV.:
S.A.D.	B.K.W.	B.K.W.

LICENSER:

LICENSED ARCHITECT RICHARD SAMBORSKI No. C11636 Exp. 09-30-17 STATE OF CALIFORNIA

SHEET TITLE:

DETAILS

SHEET NUMBER:

A-4

JOB NO.: T-15004-37

1. ALL ELECTRICAL WORK SHALL BE DONE IN ACCORDANCE WITH CURRENT NATIONAL ELECTRICAL CODES AND ALL LOCAL AND STATE CODE, LAWS, AND ORDINANCES. PROVIDE ALL COMPONENTS AND WIRING SIZES AS REQUIRED TO MEET NEC STANDARDS.

2. CONTRACTOR SHALL COORDINATE WITH LOCAL POWER COMPANY FOR REQUIREMENTS OF POWER SERVICE LINE TO THE METER BASE. POWER SERVICE REQUIREMENT IS COMMERCIAL AC NOMINAL 120/208 VOLT OR 120/240 VOLT, SINGLE PHASE WITH 200 AMP RATING.

3. CONTRACTOR SHALL COORDINATE WITH LOCAL TELEPHONE COMPANY FOR REQUIREMENTS OF "T1" SERVICE LINE TO TERMINATE AT THE PPC CABINET.

4. CONTRACTOR SHALL FURNISH AND INSTALL ELECTRIC METER BASE AND 200A DISCONNECT SWITCH PER SITE PLAN AND DETAIL DRAWINGS. THE METER BASE SHOULD BE LOCATED IN A MANNER WHERE ACCESSIBLE BY THE LOCAL POWER COMPANY.

5. LOCAL POWER COMPANY SHALL PROVIDE 200 AMP ELECTRIC METER. CONTRACTOR SHALL COORDINATE INSTALLATION OF METER WITH LOCAL POWER COMPANY.

6. UNDERGROUND POWER AND TELCO SERVICE LINES SHALL BE ROUTED IN A COMMON TRENCH. ALL UNDERGROUND CONDUIT SHALL BE PVC SCHEDULE 40 AND CONDUIT EXPOSED ABOVE GROUND SHALL BE RIGID GALVANIZED STEEL UNLESS OTHERWISE INDICATED.

7. ALL TELCO CONDUIT LINES SHALL BE 4" SCH. 40 PVC CONDUIT UNLESS OTHERWISE INDICATED. THE TELCO CONDUIT FROM THE PPC SHALL BE ROUTED AND TERMINATED AT DESIGNATED TELCO DEMARCATION OR 2-FEET OUTSIDE FENCED AREA, NEAR UTILITY POLE (IN FENCED AREA), OR END CAP OFF AND PROVIDE MARKER STAKE PAINTED BRIGHT ORANGE WITH DESIGNATION FOR TELCO SERVICE.

8. CONDUITS INSTALLED AT PCS EQUIPMENT ENDS PRIOR TO THE EQUIPMENT INSTALLATION SHALL BE STUBBED AND CAPPED AT 6" ABOVE GRADE OR PLATFORM. IF SERVICE LINES CAN'T BE INSTALLED INITIALLY, PROVIDE NYLON PULL CORD IN CONDUITS.

9. THE SPRINT CABINET, INCLUDING 200 AMP LOAD PANEL AND TELCO PANEL, SHALL BE PROVIDED BY OWNER AND INSTALLED BY THE CONTRACTOR. CONTRACTOR IS TO INSTALL BREAKER(S) NOT PROVIDED BY MANUFACTURER. SEE PANEL SCHEDULE ON THIS SHEET FOR BREAKER REQUIREMENTS.

10. LOCATION OF ELECTRIC METER AND DISCONNECT SWITCH TO BE COORDINATED BY ELECTRICAL CONTRACTOR AND FIELD CONSTRUCTION MANAGER.

11. #2 WIRE TO BE UTILIZED IN ELECTRIC SERVICE RUNS EXCEEDING 100'.

12. CONTRACTOR SHALL INSPECT THE EXISTING CONDITIONS PRIOR TO SUBMITTING BID. ANY QUESTIONS ARISING DURING THE BID PERIOD IN REGARDS TO THE CONTRACTORS FUNCTIONS, THE SCOPE OF WORK, OR ANY OTHER ISSUE RELATED TO THIS PROJECT SHALL BE BROUGHT UP DURING THE BID PERIOD WITH THE PROJECT MANAGER FOR CLARIFICATION, NOT AFTER THE CONTRACT HAS BEEN AWARDED.

13. LOCATION OF EQUIPMENT, CONDUIT AND DEVICES SHOWN ON THE DRAWINGS ARE APPROXIMATE AND SHALL BE COORDINATED WITH FIELD CONDITIONS PRIOR TO ROUGH-IN.

14. THE CONDUIT RUNS AS SHOWN ON THE PLANS ARE APPROXIMATE. EXACT LOCATION AND ROUTING SHALL BE PER EXISTING FIELD CONDITIONS.

15. PROVIDE PULL BOXES AND JUNCTION BOXES WHERE SHOWN OR REQUIRED BY NEC.

16. ALL CONDUITS SHALL BE MET WITH BENDS MADE IN ACCORDANCE WITH NEC TABLE 346-10. NO RIGHT ANGLE DEVICE OTHER THAN STANDARD CONDUIT ELBOWS WITH 12" MINIMUM INSIDE SWEEPS FOR ALL CONDUITS 2" OR LARGER.

17. ALL CONDUIT TERMINATIONS SHALL BE PROVIDED WITH PLASTIC THROAT INSULATING GROUNDING BUSHINGS.

18. ALL WIRE SHALL BE TYPE THWN, SOLID, ANNEALED COPPER UP TO SIZE #10 AWG (#8 AND LARGER SHALL BE CONCENTRIC STRANDED) 75 DEGREE C, (167 DEGREES F), 98% CONDUCTIVITY, MINIMUM #12.

19. ALL WIRES SHALL BE TAGGED AT ALL PULL BOXES, J-BOXES, EQUIPMENT BOXES AND CABINETS WITH APPROVED PLASTIC TAGS, ACTION CRAFT, BRADY, OR APPROVED EQUAL.

20. ALL NEW MATERIAL SHALL HAVE A U.L. LABEL.

21. CONDUIT ROUGH-IN SHALL BE COORDINATED WITH THE MECHANICAL EQUIPMENT TO AVOID LOCATION TO CONFLICTS. VERIFY WITH MECHANICAL CONTRACTOR AND COMPLY AS REQUIRED.

22. ALL PANEL DIRECTORIES SHALL BE TYPEWRITTEN NOT HAND WRITTEN.

23. INSTALL AN EQUIPMENT GROUNDING CONDUCTOR IN ALL CONDUITS PER THE SPECIFICATIONS AND NEC. THE EQUIPMENT GROUNDING CONDUCTORS SHALL BE BONDED AT ALL JUNCTION BOXES, PULL BOXES, AND ALL DISCONNECT SWITCHES, STARTERS, AND EQUIPMENT CABINETS.

24. THE CONTRACTOR SHALL PREPARE AS-BUILT DRAWINGS, DOCUMENT ANY AND ALL WIRING AND EQUIPMENT CONDITIONS AND CHANGES WHILE COMPLETING THIS CONTRACT. SUBMIT AT SUBSTANTIAL COMPLETION.

25. ALL DISCONNECT SWITCHES AND OTHER CONTROLLING DEVICES SHALL BE PROVIDED WITH ENGRAVED PHENOLIC NAMEPLATES INDICATING EQUIPMENT CONTROLLED, BRANCH CIRCUITS INSTALLED ON, AND PANEL FIELD LOCATIONS FED FROM (NO EXCEPTIONS.)

26. ALL ELECTRICAL DEVICES AND INSTALLATIONS OF THE DEVICES SHALL COMPLY WITH (ADA) AMERICANS WITH DISABILITIES ACT AS ADOPTED BY THE APPLICABLE STATE.

27. PROVIDE CORE DRILLING AS NECESSARY FOR PENETRATIONS OR RISERS THROUGH BUILDING. DO NOT PENETRATE STRUCTURAL MEMBERS WITHOUT CONSTRUCTION MANAGERS APPROVAL. SLEEVES AND/OR PENETRATIONS IN FIRE RATED CONSTRUCTION SHALL BE PACKED WITH FIRE RATED MATERIAL WHICH SHALL MAINTAIN THE FIRE RATING OF THE WALL OR STRUCTURE. FILL FOR FLOOR PENETRATIONS SHALL PREVENT PASSAGE OF WATER, SMOKE, FIRE AND FUMES. ALL MATERIAL SHALL BE UL APPROVED FOR THIS PURPOSE.

28. ELECTRICAL CHARACTERISTICS OF ALL EQUIPMENT (NEW AND EXISTING) SHALL BE FIELD VERIFIED WITH THE OWNER'S REPRESENTATIVE AND EQUIPMENT SUPPLIER PRIOR TO ROUGH-IN OF CONDUIT AND WIRE. ALL EQUIPMENT SHALL BE PROPERLY CONNECTED ACCORDING TO THE NAMEPLATE DATA FURNISHED ON THE EQUIPMENT (THE DESIGN OF THESE PLANS ARE BASED UPON BEST AVAILABLE INFORMATION AT THE TIME OF DESIGN AND SOME EQUIPMENT CHARACTERISTICS MAY VARY FROM DESIGN AS SHOWN ON THESE DRAWINGS).

29. LOCATION OF ALL OUTLET, BOXES, ETC., AND THE TYPE OF CONNECTION (PLUG OR DIRECT) SHALL BE CONFIRMED WITH THE OWNER'S REPRESENTATIVE PRIOR TO ROUGH-IN.

17 ELECTRICAL NOTES
NOT TO SCALE

(E) T-MOBILE PANEL

VOLTAGE: 120/240 V, 1 PHASE, 3 WIRE		MOUNTING: SURFACE					ENCLOSURE: NEMA 1	
BUS: 100 AMPS		TYPE: 100/2 TRANSFER DEVICE					AIC RATING: 22,000	
LOAD	KVA	CB	NO		NO	CB	KVA	LOAD
	0.00	100	1		2	60	5.4	6102 CABINET
		2	3		4	2		
BTS	0.00	40	5		6	20 / 1	0.18	RECPT
		2	7		8			SPACE
MCPA	0.00	20 / 1	9		10	50	5.4	UMTS BTS
SPACE			11		12	2		

N G

CONNECTED LOAD 10.98
25% LIGHTING
25% LARGEST MOTOR 0.00
TOTAL CONNECTED LOAD 10.98 CONNECTED LOAD: 45.75 AMPERES

(P) T-MOBILE PANEL

VOLTAGE: 120/240 V, 1 PHASE, 3 WIRE		MOUNTING: SURFACE					ENCLOSURE: NEMA 1	
BUS: 100 AMPS		TYPE: 100/2 TRANSFER DEVICE					AIC RATING: 22,000	
LOAD	KVA	CB	NO		NO	CB	KVA	LOAD
	0.00	100	1		2	60		SPARE
		2	3		4	2		
6102 CABINET	**13.00**	100	5		6	20 / 1	0.18	RECPT
		2	7		8			SPACE
MCPA	0.00	20 / 1	9		10	50	5.4	UMTS BTS
SPACE			11		12	2		

N G

CONNECTED LOAD 18.58
25% LIGHTING
25% LARGEST MOTOR 0.00
TOTAL CONNECTED LOAD 20.58 CONNECTED LOAD: 77.42 AMPERES

PANEL SCHEDULE
NOT TO SCALE

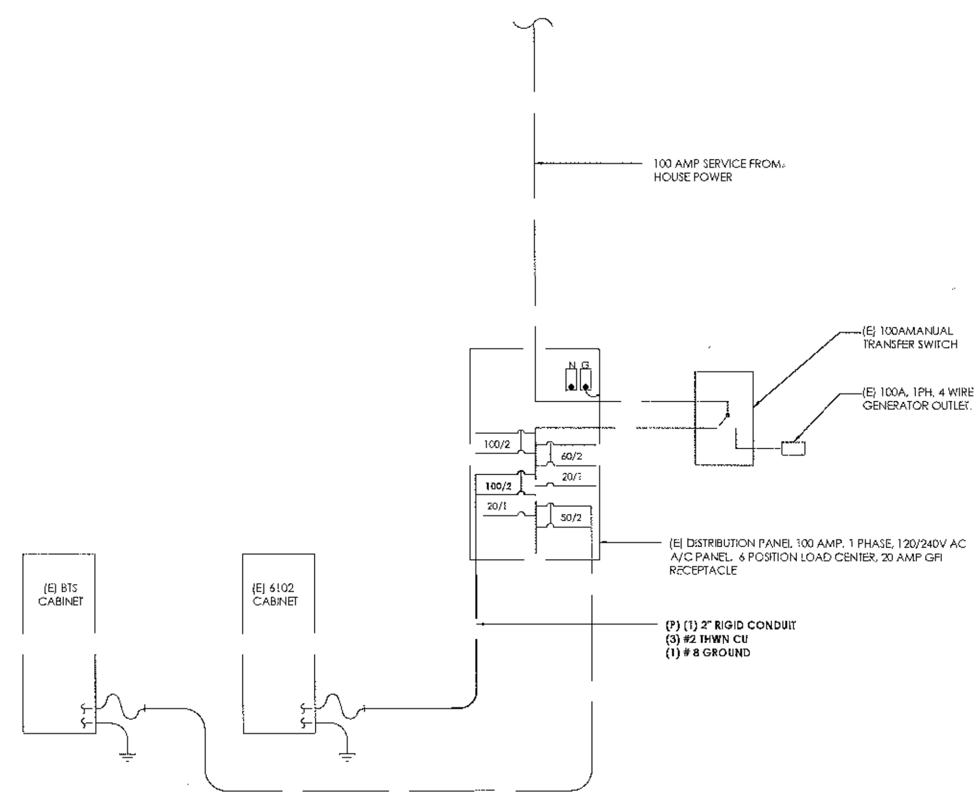

13 PROPOSED ONE LINE DIAGRAM AND PANEL SCHEDULE
1" = 1'-0"

TYPICAL SYMBOLS

- LIGHTING FIXTURE, WALL MOUNTED
- EM NIGHT LIGHT - FIXTURES TAGGED "EM" TO HAVE EMERGENCY BATTERY BALLAST
- FLUORESCENT LIGHT FIXTURE, SEE FIXTURE SCHEDULE
- FLUORESCENT LIGHT FIXTURE, SEE FIXTURE SCHEDULE
- EXIT LIGHT FIXTURE. DIRECTIONAL ARROWS AS REQUIRED.
- EMERGENCY LIGHT. MOUNT AT 84" AFF.
- (A) LIGHT FIXTURE TAG. SEE FIXTURE SCHEDULE.
- FACP FIRE ALARM CONTROL PANEL
- F FIRE PULL STATION AT +48"
- FS FIRE FLOW SWITCH
- TS FIRE TAMPER SWITCH
- J JUNCTION BOX
- SINGLE POLE TOGGLE SWITCH, 20A, +48"
- TWO GANG TOGGLE SWITCH, 20A, +48" UON LETTERS DENOTE FIXTURES SERVED
- 2 POLE TOGGLE SWITCH, 20A, +48"
- 3 WAY TOGGLE SWITCH, 20A, +48"
- DIMMER SWITCH, 20A, +48"
- TIMER SWITCH 20A, @ +48"
- KEYED SWITCH, @ +48"
- PUSH BUTTON
- MOTION SENSOR SWITCH - SINGLE LEVEL LEVITON #6768 W +48"
- MOTION SENSOR SWITCH - DUAL LEVEL LEVITON #6772 W +48"
- CEILING HALLWAY MOUNTED OCCUPANT SENSING DEVICE, LEVITON #6787 W.
- CEILING MOUNTED OCCUPANT SENSING DEVICE "OS", LEVITON #16786 WITH POWER PACK "PP" LEVITON #6779-DT
- MOTION SENSOR SWITCH - CEILING MOUNTED
- POWER PACK FOR MOTION SENSORS
- FOURPLEX RECEPTACLE 15A, 125V, +18"AFF UON.
- DUPLEX RECEPTACLE OUTLET 20A, 125V, +18"AFF UON
- MOUNT OUTLET ABOVE COUNTER OR BACKSPLASH (VERIFY HEIGHT W/ARCHITECT)
- OUTLET MOUNTED IN FLOOR OR CEILING.
- SECURITY OUTLET WITH LOCKABLE COVER
- TELEPHONE OUTLET: +18"AFF UON, PROVIDE PULL WIRE OR 3/4" CONDUIT TO NEAREST ACCESSIBLE CEILING SPACE.
- COMBINATION COMM/DATA OUTLET: +18"AFF UON, PROVIDE PULL WIRE OR 3/4" CONDUIT TO NEAREST ACCESSIBLE CEILING SPACE.
- DATA OUTLET: +18" AFF UON, PROVIDE PULL WIRE OR 3/4: CONDUIT TO NEAREST ACCESSIBLE CEILING SPACE.
- TELEPHONE / DATA OUTLET MOUNTED IN FLOOR OR CEILING.
- MICROPHONE OUTLET MOUNTED IN FLOOR OR CEILING.
- MAIN SWITCHBOARD
- LIGHTING OR DISTRIBUTION PANEL,
- SURFACE OR FLUSH TERMINAL CABINET
- T DISTRIBUTION TRANSFORMER, MOUNTING AS NOTED
- F DISCONNECT SWITCH SIZE & TYPE AS REQUIRED F=FUSED
- MOTOR SEE MECHANICAL PLANS AND SPECIFICATION
- EXHAUST FAN - SEE MECHANICAL PLANS AND SPECIFICATION
- AC-1 MECHANICAL EQUIPMENT I.D. TAG - SEE MECHANICAL PLANS
- CIRCUIT CONCEALED IN CEILING OR WALL
- CIRCUIT CONCEALED IN FLOOR OR UNDERGROUND
- HOME RUN TO PANELBOARD OR TERMINAL CABINET
- DENOTES # OF #12 WIRES, NO MARKS = 2 #12, ½"C. CURVED HATCH DENOTES GROUND. OTHERS AS NOTED
- CONDUIT SEAL OFF
- TELEPHONE TERMINAL BOARD: SIZE AS SHOWN. FOURPLEX RECEPTACLE & 1 #6 CU TO GROUND.

NOTE: SYMBOLS INDICATED ABOVE MAY NOT NECESSARILY APPEAR AS PART OF THESE DRAWINGS IF NOT REQUIRED.

ABBREVIATIONS

BCW	BARE COPPER WIRE
C	CONDUIT
CEC	CALIFORNIA ELECTRICAL CODE
(E)	EXISTING
EG	EQUIPMENT GROUND
FACP	FIRE ALARM CONTROL PANEL
G	GROUND FAULT CIRCUIT INTERRUPTER
IG	ISOLATED GROUND
IMC	INTERMEDIATE METAL CONDUIT
LFMC	LIQUID TIGHT FLEXIBLE METAL CONDUIT
MCM	MILLION CIRCULAR MILLS
MP&S	SEE MECHANICAL PLANS & SPECIFICATIONS
(N)	NEW
NEC	NATIONAL ELECTRICAL CODE - NFPA 70
NEMA	NATIONAL ELECTRICAL MANUFACTURER'S ASSOCIATION
NL	NIGHT LIGHT - FIXTURE TO BE UNSWITCHED
PFB	PROVISION FOR FUTURE BREAKER
PVC	POLYVINYL CHLORIDE CONDUIT
(R)	RELOCATE AS INDICATED
(RV)	REMOVE - RESTORE CONTINUITY TO REMAINING DEVICES.
TYP	TYPICAL
UON	UNLESS OTHERWISE NOTED
WP	WEATHERPROOF
GFCI	GROUND FAULT CIRCUIT INTERRUPTER

T-Mobile
T-MOBILE WEST LLC,
a DELAWARE CORPORATION
SAN FRANCISCO AREA
NEW SITE DEVELOPMENT
1855 GATEWAY BLVD, 9TH FLOOR
CONCORD, CA 94520
(925) - 521 - 5597

PROJECT INFORMATION:

SF04589A

SF589 JCT. I-680 G4

990 AMES AVENUE
MILPITAS, CA 95035
CITY OF MILPITAS

CURRENT ISSUE DATE:

09/30/15

ISSUED FOR:

100% CD DRAWINGS

REV	DATE	DESCRIPTION	BY
0	04/30/15	90% CD SUBMITTAL	S.A.D.
1	05/24/15	100% CD SUBMITTAL	S.A.D.
2	05/24/15	100% CD REV1	S.A.D.

PROJECT ARCHITECT / ENGINEER:
ARCHITECTURE PLANNING INTERIORS
Borges ARCHITECTURAL GROUP
1478 STONE POINT DRIVE SUITE 350 ROSEVILLE CA 95661
T: 916 782 7200 F: 916 773 3037
BORGESARCH.COM

CONSULTANT:
FORTATELECOM, Inc.
1330 North Broadway
Suite 202
Walnut Creek, CA 94596

DRAWN BY:	CHK.:	APV.:
S.A.D.	B.K.W.	B.K.W.

LICENSER:

LICENSED ARCHITECT RICHARD SAMBUCETTI No. C11535 Ren. 09-30-17 STATE OF CALIFORNIA

SHEET TITLE:

ELECTRICAL DETAILS

SHEET NUMBER:

E-1

Job No.: T-15004-37

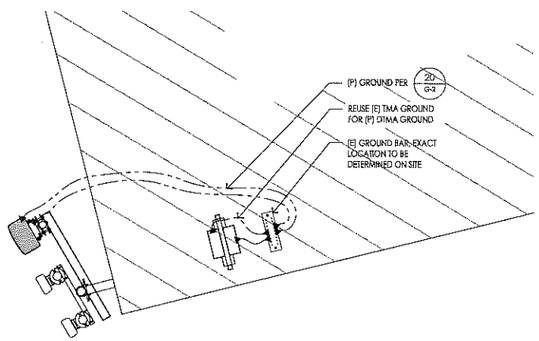

17 ENLARGED SECTOR G ANTENNA GROUNDING PLAN
1/2" = 1'-0"

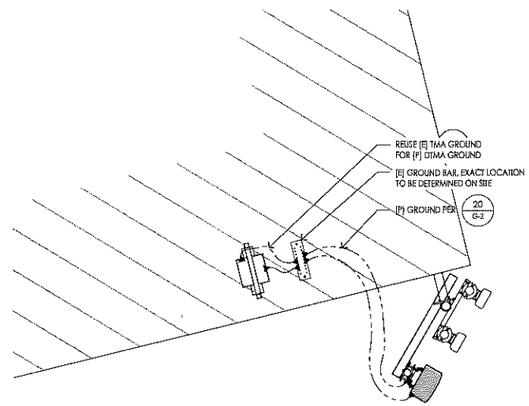

15 ENLARGED SECTOR B ANTENNA GROUNDING PLAN
1/2" = 1'-0"

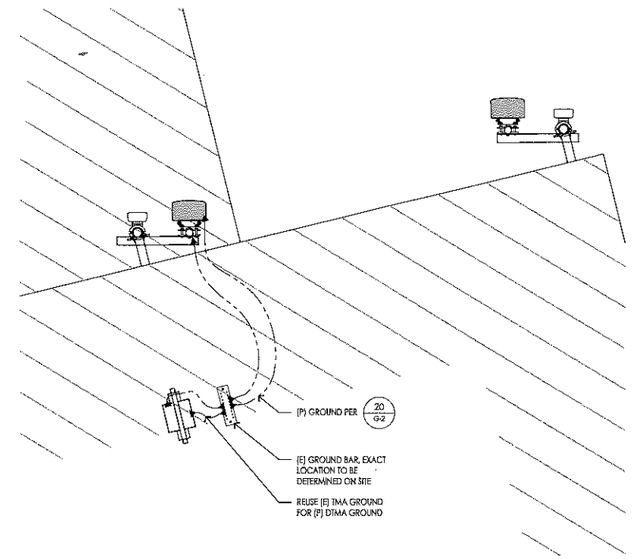

7 ENLARGED SECTOR A ANTENNA GROUNDING PLAN
1/2" = 1'-0"

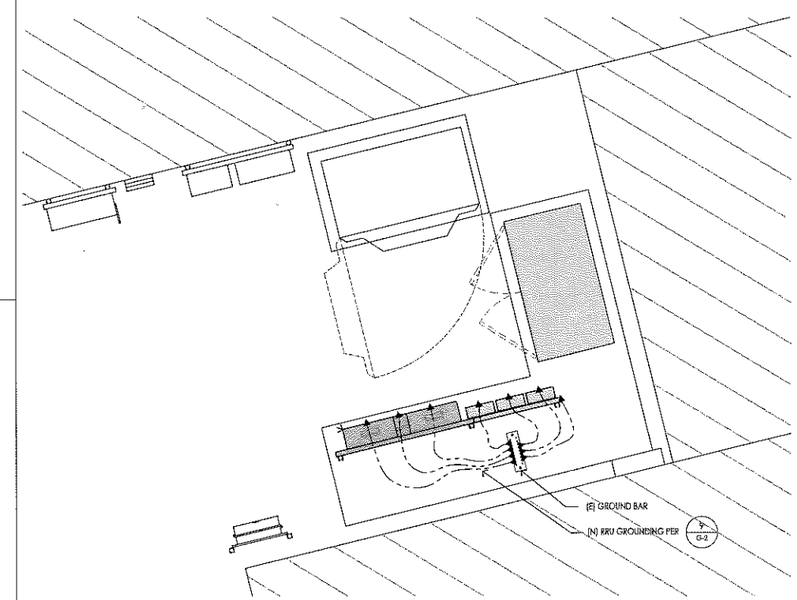

5 ENLARGED EQUIPMENT GROUNDING PLAN
1/2" = 1'-0"

T-Mobile

T-MOBILE WEST LLC.
a DELAWARE CORPORATION
SAN FRANCISCO AREA
NEW SITE DEVELOPMENT

1855 GATEWAY BLVD, 9TH FLOOR
CONCORD, CA 94520
(925) - 521 - 6597

PROJECT INFORMATION:

SF04589A

SF589 JCT. I-680 G4

990 AMES AVENUE
MILPITAS, CA 95035
CITY OF MILPITAS

CURRENT ISSUE DATE:

09/30/15

ISSUED FOR:

100% CD DRAWINGS

REV	DATE	DESCRIPTION	BY
0	04/30/15	90% CD SUBMITTAL	S.A.D.
1	05/24/15	100% CD SUBMITTAL	S.A.D.
1	05/24/15	100% CD REV1	S.A.D.

PROJECT ARCHITECT / ENGINEER:

ARCHITECTURAL GROUP Borges
ARCHITECTURE PLANNING INTERIORS
1478 STONEPINE DRIVE
SUITE 200
FORNTVILLE CA 95461
T/707.765.7500
F/707.773.3027
BORGESGROUP.COM

CONSULTANT:

FORTA TELECOM, INC.
1330 North Broadway
Suite 202
Walnut Creek, CA 94596

DRAWN BY: S.A.D. CHK.: B.K.W. APV.: B.K.W.

LICENSER:

LICENSED ARCHITECT
RICHARD SAWYER III
No. C11636
Exp. 09-30-17
STATE OF CALIFORNIA

SHEET TITLE:

GROUNDING SHEET

SHEET NUMBER:

G-1

JOB No.: T-15004-37

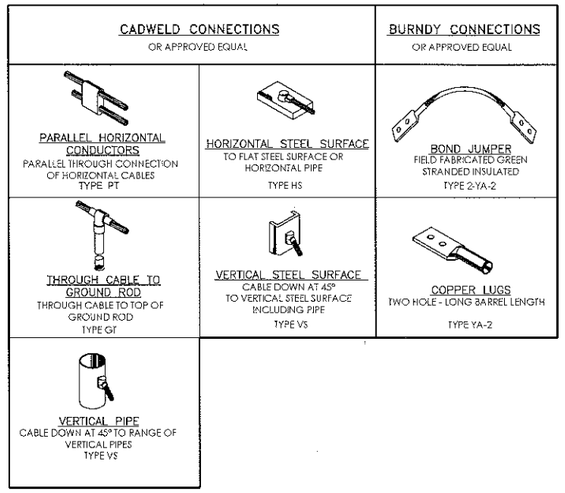

TYPICAL CADWELD TYPE CONNECTIONS
NO SCALE

GROUNDING NOTES

1. ALL ELECTRICAL AND GROUNDING AT THE CELL SITE SHALL COMPLY WITH THE NATIONAL ELECTRICAL CODE (NEC), NATIONAL FIRE PROTECTION ASSOCIATION (NFPA) 780 (LATEST EDITION), AND MANUFACTURER SPECIFICATION.
2. IF THE AC PANEL IN THE POWER CABINET IS WIRED AS SERVICE ENTRANCE, THE AC SERVICE GROUND CONDUCTOR SHALL BE CONNECTED TO GROUND ELECTRODE SYSTEM. WHEN THE AC PANEL IN THE POWER CABINET IS CONSIDERED A SUB-PANEL, THE GROUND WIRE SHALL BE INSTALLED IN THE AC POWER CONDUIT. THE INSTALLATION SHALL BE PER LOCAL AND NATIONAL ELECTRIC CODE (NFPA-70).
3. EXOTHERMIC WELDING IS RECOMMENDED FOR GROUNDING CONNECTION WHERE PRACTICAL. OTHERWISE, THE CONNECTION SHALL BE MADE USING COMPRESSION TYPE-2 HOLES, LONG BARREL LUGS OR DOUBLE CRIMP CLAMP "C" CLAMP. THE COPPER CABLES SHALL BE COATED WITH ANTIOXIDANT (COPPER SHIELD) BEFORE MAKING THE CONNECTIONS. THE MANUFACTURER'S TORQUING RECOMMENDATIONS ON THE BOLT ASSEMBLY TO SECURE CONNECTIONS SHALL BE FOLLOWED.
4. THE ANTENNA CABLES SHALL BE GROUNDED AT THE TOP AND BOTTOM OF THE VERTICAL RUN FOR LIGHTING PROTECTION. THE ANTENNA CABLE SHIELD SHALL BE BONDED TO A COPPER GROUND BUSS AT THE LOWER MOST POINT OF A VERTICAL RUN JUST BEFORE IT BEGINS TO BEND TOWARD THE HORIZONTAL PLANE. WIRE RUNS TO GROUND SHALL BE KEPT AS STRAIGHT AND SHORT AS POSSIBLE. ANTENNA CABLE SHIELD SHALL BE GROUNDED JUST BEFORE ENTERING THE CELL CABINET. ANY ANTENNA CABLES OVER 200 FEET IN LENGTH SHALL ALSO BE EQUIPPED WITH ADDITIONAL GROUNDING AT MID-POINT.
5. ALL GROUNDING CONDUCTORS INSIDE THE BUILDING SHALL BE RUN IN CONDUIT RACEWAY SYSTEM, AND SHALL BE INSTALLED AS STRAIGHT AS PRACTICAL WITH MINOR BENDS TO AVOID OBSTRUCTIONS. THE BENDING RADIUS OF ANY #2 GROUNDING CONDUCTOR IS 8". PVC RACEWAY MAY BE FLEXIBLE OR RIGID PER THE FIELD CONDITIONS. GROUNDING CONDUCTORS SHALL NOT MAKE CONTACT WITH ANY METALLIC CONDUITS, SURFACES OR EQUIPMENT.
6. PROVIDE PVC SLEEVES WHERE GROUNDING CONDUCTORS PASS THROUGH THE BUILDING WALLS AND /OR CEILINGS.
7. INSTALL GROUND BUSHINGS ON ALL METALLIC CONDUITS AND BOND TO THE EQUIPMENT GROUND BUSS IN THE PANEL BOARD.
8. GROUND ANTENNA BASES, FRAMES, CABLE RACKS AND OTHER METALLIC COMPONENTS WITH #2 GROUNDING CONDUCTORS AND CONNECT TO INSULATED SURFACE MOUNTED GROUND BARS. CONNECTION DETAILS SHALL FOLLOW MANUFACTURER'S SPECIFICATIONS FOR GROUNDING.
9. ALL PROPOSED GROUNDING CONDUCTORS SHALL BE ROUTED AND CONNECTED TO THE MAIN GROUND BAR OR EXISTING GROUND RING.

GROUNDING LEGEND

- EXISTING GROUND RING
- CADWELD CONNECTION (EXOTHERMIC WELD)
- MECHANICAL CONNECTION
- GROUND ROD

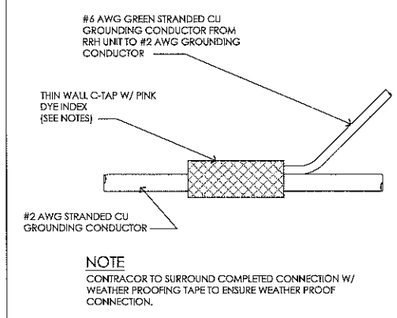

NOTE
CONTRACOR TO SURROUND COMPLETED CONNECTION W/ WEATHER PROOFING TAPE TO ENSURE WEATHER PROOF CONNECTION.

10 C-TAP CONNECTION
NOT TO SCALE

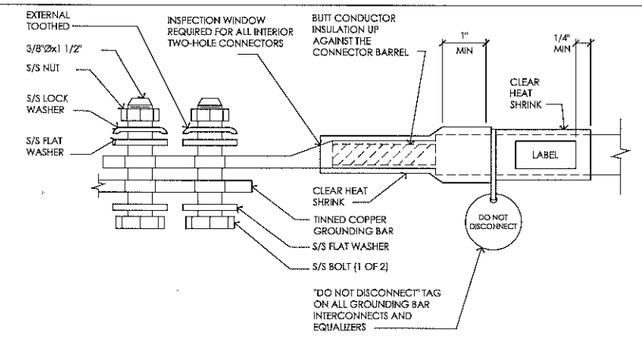

6 TWO HOLE LUG
NOT TO SCALE

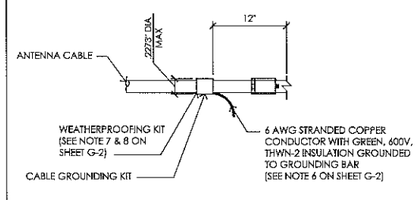

9 CONNECTION OF GROUNDING KIT TO ANTENNA CABLE
NOT TO SCALE

1. COMPRESSION CONNECTIONS (2), 2 AWG BARE TINNED SOLID COPPER CONDUCTORS TO GROUNDING BAR. ROUTE CONDUCTORS TO BURIED GROUNDING RING AND PROVIDE PARALLEL EXOTHERMIC WELD.
2. EC SHALL USE PERMANENT MARKER TO DRAW THE LINES BETWEEN EACH SECTION AND LABEL EACH SECTION ("P", "A", "N", "T") WITH 1" HIGH LETTERS.
3. ALL HARDWARE 18-8 STAINLESS STEEL, INCLUDING LOCK WASHERS, COAT ALL SURFACES WITH AN ANTI-OXIDANT COMPOUND BEFORE MATING. ALL HARDWARE SHALL BE STAINLESS STEEL 3/8 INCH DIAMETER OR LARGER.
4. FOR GROUND BOND TO STEEL ONLY: INSERT A CADMIUM FLAT WASHER BETWEEN LUG AND STEEL, COAT ALL SURFACES WITH AN ANTI-OXIDANT COMPOUND BEFORE MATING.
5. NUT & WASHER SHALL BE PLACED ON THE FRONT SIDE OF THE GROUNDING BAR AND BOLTED ON THE BACK SIDE. INSTALL BLACK HEAT-SHRINKING TUBE, 600 VOLT INSULATION, ON ALL GROUNDING TERMINATIONS. THE INTENT IS TO WEATHERPROOF THE COMPRESSION CONNECTION.
6. NUMBER OF GROUNDING BARS MAY VARY DEPENDING ON THE TYPE OF TOWER, ANTENNA LOCATION, AND CONNECTION ORIENTATION. PROVIDE AS REQUIRED.
7. GROUNDING KIT SHALL BE TYPE AND PART NUMBER AS SUPPLIED OR RECOMMENDED BY CABLE MANUFACTURER.
8. WEATHERPROOFING SHALL BE TYPE AND PART NUMBER AS SUPPLIED OR RECOMMENDED BY CABLE MANUFACTURER.
9. GROUND RESISTANCE NOT TO EXCEED 10 OHMS.
10. WHEN THE SCOPE OF WORK REQUIRES THE ADDITION OF A GROUNDING BAR TO AN EXISTING TOWER, THE SUBCONTRACTOR SHALL OBTAIN APPROVAL FROM THE TOWER OWNER PRIOR TO MOUNTING THE GROUNDING BAR TO THE TOWER.
11. EXTEND TWO (2) 2 AWG TINNED CU CONDUCTOR FROM BURIED GROUNDING RING AND CONNECT TO THE PROPOSED TOWER. FOLLOW MANUFACTURERS RECOMMENDATIONS FOR GROUNDING CONNECTIONS TO THE TOWER. (APPLICABLE TO NEW TOWERS ONLY.)
12. NUMBER OF GROUNDING BARS MAY VARY DEPENDING ON THE TYPE OF TOWER, ANTENNA LOCATION, AND CONNECTION ORIENTATION. THE SUBCONTRACTOR SHALL BE RESPONSIBLE FOR INSTALLING ADDITIONAL GROUNDING BARS AS REQUIRED, PROVIDING 50% SPARE CONNECTION POINTS.

5 GROUNDING NOTES
NOT TO SCALE

T-Mobile
T-MOBILE WEST LLC.
a DELAWARE CORPORATION
SAN FRANCISCO AREA
NEW SITE DEVELOPMENT
1855 GATEWAY BLVD, 9TH FLOOR
CONCORD, CA 94520
(925) - 521 - 2597

PROJECT INFORMATION:

SF04589A

SF589 JCT. I-680 G4

990 AMES AVENUE
MILPITAS, CA 95035
CITY OF MILPITAS

CURRENT ISSUE DATE:

09/30/15

ISSUED FOR:

100% CD DRAWINGS

REV	DATE	DESCRIPTION	BY
0	04/30/15	90% CD SUBMITTAL	S.A.D.
1	05/24/15	100% CD SUBMITTAL	S.A.D.
1	05/24/15	100% CD REV1	S.A.D.

PROJECT ARCHITECT / ENGINEER:

ARCHITECTURE PLANNING INTERIORS
ARCHITECTURAL GROUP Borges
1478 STONEPOINT CROSS
SUITE 200
ROSEVILLE CA 95661
T:916 780 2000
F:916 773 3383
BORGESARCH.COM

CONSULTANT:

FORTA TELECOM, INC.
1330 North Broadway
Suite 202
Walnut Creek, CA 94596

DRAWN BY:	CHK.:	APV.:
S.A.D.	B.K.W.	B.K.W.

LICENSER:

LICENSED ARCHITECT RICHARD SANDOVAL No. C11536 Exp. 09-30-11 STATE OF CALIFORNIA

SHEET TITLE:

GROUNDING DETAILS & NOTES

SHEET NUMBER:

G-2

JOB NO.: T-15004-37