ZHANG CONDOS

1316 SOUTH MAIN STREET
MILPITAS, CA

CONDITIONAL USE PERMIT

ABBREVIATIONS

@	AT
A.B.	ANCHOR BOLT
A.C.	ASPHALTIC CONCRETE
ACOUST	ACOUSTICAL
ADD	ADDENDUM
ADJ	ADJUSTABLE
AGGR	AGGREGATE
AHJ	AUTHORITIES HAVING JURISDICTION
ALT	ALTERNATE
ALUM	ALUMINUM
APPROX	APPROXIMATELY
ARCH	ARCHITECT
∠	ANGLE
BD	BOARD
BLDG	BUILDING
BLK(G)	BLOCK(ING)
BM	BEAM
BOT	BOTTOM
BOW	BACK OF WALK
B.S.L.	BUILDING SETBACK LINE
B.SPL	BACKSPLASH
BTW	BETWEEN
B.U.R.	BUILT-UP ROOFING
B.W.	BOTH WAYS
CAB	CABINET
C.A.H.	CLEAR ALL HEART
C.B.	CATCH BASIN, CORNER BEAD
C.B.C.	CALIFORNIA BUILDING CODE
C.C.	CENTER TO CENTER
C.C.R.	CALIFORNIA CODE OF REGULATION
CEM	CEMENT
C.I.	CAST IRON
C.J.	COLD JOINT, CONTROL JOINT
CLG	CEILING
CLKG	CAULKING
CLO	CLOSET
CLR	CLEAR
C.M.C.	CALIFORNIA MECHANICAL CODE
C.M.P.	CORRUGATED METAL PIPE
C.M.U.	CONCRETE MASONRY UNIT
COL	COLUMN
CONC	CONCRETE
CONN	CONNECTION
CONSTR	CONSTRUCTION
CONT	CONTINUOUS
C.O.N.C.	CALIFORNIA OFFICE OF NOISE CONTROL
C.O.T.G	CLEANOUT TO GRADE
C.P.C.	CALIFORNIA PLUMBING CODE
CPT	CARPET
C.T.	CERAMIC TILE
CTR	CENTER
CTSK	COUNTERSINK
CU	CONDENSING UNIT
℄	CENTERLINE
D	DRYER
DBL	DOUBLE
DET	DETAIL
D.F.	DOUGLAS FIR
D.F.	DRINKING FOUNTAIN
DIA. ϕ	DIAMETER
DIAG	DIAGONAL
DIM	DIMENSION
DISP	DISPENSER, DISPOSER
DN	DOWN
DO	DITTO
DR	DOOR
DS.	DOWN SPOUT
DW	DISHWASHER
DWG	DRAWING
DWR	DRAWER
E.	EAST
EA.	EACH
E.J.	EXPANSION JOINT
ELEC	ELECTRIC(AL)
EL	ELEVATION
ELEV	ELEVATOR
EMER	EMERGENCY
EN.	EDGE NAILING
ENCL	ENCLOSURE
EQ	EQUAL
EQP	EQUIPMENT
E.W.C.	ELECTRIC WATER COOLER
EW	EACH WAY
(E)EXIST	EXISTING
EXP	EXPANSION
EXPO	EXPOSED
EXT	EXTERIOR, EXTENSION
F.A.	FIRE ALARM
FAU	FORCED AIR UNIT
F.B.	FLAT BAR
F.C.	FRAMING CLIP
F.C.O.	FLOOR CLEANOUT
F.D.	FLOOR DRAIN
FDC	FIRE DEPT. CONNECTION
FDN	FOUNDATION
F.E.	FIRE EXTINGUISHER
F.F.	FACE OF FRAME, FACEFRAME, FINISH FLOOR
F.F.A.	FREE FLOW AREA
F.G.	FINISH GRADE
FGL	FIXED GLASS
FIN	FINISH
FL	FLOOR
FLASH	FLASHING
FLUOR	FLUORESCENT
F.O.C.	FACE OF CONCRETE
F.O.F.	FACE OF FINISH
F.O.M.	FACE OF MASONRY
F.O.S.	FACE OF STUD
F.O.	FINISHED OPENING
FPRF	FIREPROOF
F.R.T.	FIRE RETARDANT TREATED
FR	FIRE RATED(ING)
FTG.	FOOTING
FT|	FOOT
FUR	FURRING
FUT	FUTURE
GA	GAUGE
GAL	GALLON
GALV	GALVANIZED
G.B.	GRAB BAR
GLB	GLULAM BEAM
G.I.	GALVANIZED IRON
GL	GLASS
GND	GROUND
GR	GRADE
GSM	GALVANIZED SHEET METAL
G.W.B.	GYPSUM WALLBOARD
GYP	GYPSUM
H.B.	HOSE BIBB
H.C.	HOLLOW CORE
HD	HOLDDOWN
HDWR	HARDWARE
HDWD	HARDWOOD
HDR	HEADER
HGT	HEIGHT
H.M.	HOLLOW METAL
HORIZ	HORIZONTAL
H.R.	HANDRAIL
HR	HOUR
HDG	HOT DIPPED GALVANIZED
HWH	HOT WATER HEATER
IAW	IN ACCORDANCE WITH
I.D.	INSIDE DIMENSION
IN. "	INCH, INCHES
INSUL	INSULATION
INT	INTERIOR
INV	INVERT
ISA	INTERNATIONAL SYMBOL ACCESSIBILITY
JAN	JANITOR
JST	JOIST
JT	JOINT
KIT	KITCHEN
LAB	LABORATORY
LAM	LAMINATED
LAV	LAVATORY
LB. #	POUND(S)
L.F.	LINEAL FOOT
LG. L	LONG
LKR	LOCKER
LT	LIGHT
MAX	MAXIMUM
M.B.	MACHINE BOLT
M.C.	MEDICINE CABINET
MECH	MECHANICAL
MEMB	MEMBRANE
MET	METAL
MFG	MANUFACTURE(R)
MH	MANHOLE
M.I.	MALLEABLE IRON
MIN	MINIMUM
MIR	MIRROR
MISC	MISCELLANEOUS
M.O.	MASONRY OPENING
MTD	MOUNTED
MUL	MULLION
N	NORTH
(N)	NEW
N.E.C.	NATIONAL ELECTRIC CODE
N.I.C.	NOT IN CONTRACT
NO. #	NUMBER
NOM	NOMINAL
N.T.S.	NOT TO SCALE
O/	OVER
O.A.	OVERALL
OBS	OBSCURE
O.C.	ON CENTER
O.D.	OUTSIDE DIMENSION (DIA.)
OFF	OFFICE
OH	OVERHEAD, OVERHANG
OPG	OPENING
OPP	OPPOSITE
OZ	OUNCE
P.C.	PLUMBING CONTRACTOR
P.F.B.	PLASTIC FINISH BOARD
PL. /℄	PLATE, PROPERTY LINE
PLAS	PLASTER
PLYWD	PLYWOOD
POL	POLISHED
PR	PAIR
PRCST	PRECAST
PT	POINT
P.T.D.	PAPER TOWEL DISPENSER
P.T.D.F.	PRESSURE TREATED DOUGLAS FIR
P.T.D./R	COMBINATION P.T.D. & P.T.R.
PTN	PARTITION
P.T.R.	PAPER TOWL RECEPTACLE
P.U.E.	PUBLIC UTILITY EASEMENT
Q.T.	QUARRY TILE
R	RISER
R.A.	RETURN AIR
RAD	RADIUS
R.A.G.	RETURN AIR GRILLE
R.C.P	REINFORCED CONCRETE PIPE
R.D.	ROOF DRAIN
REF	REFERENCE
REINF	REINFORCED(ING)
RES	RESINOUS FLOORING
RET	RETAINING
REQ	REQUIRED
RESIL	RESILIENT
RFG	REFRIGERATOR
REGTR	REGISTER
RM	ROOM
RO	ROUGH
R.O.	ROUGH OPENING
RS	RESAWN
RWL	RAINWATER LEADER
RWD	REDWOOD
R/W	RIGHT OF WAY
S	SOUTH
SAD	SEE ARCHITECTURAL DWGS.
S.A.R.	SUPPLY AIR REGISTER
SASM	SELF-ADHERED SHEET MEMBRANE
SC	SOLID CORE
S.C.D.	SEAT COVER DISPENSER
S.D.	SOAP DISPENSER
SECT	SECTION
SF	SQUARE FEET
SH	SHELF
SHR	SHOWER
SHT	SHEET
SHTG	SHEATHING
SIM	SIMILAR
SMS.	SHEETMETAL SCREWS
S.N.D.	SANITARY NAPKIN DISPENSER
S.N.R.	SANITARY NAPKIN RECEPTACLE
S.O.V.	SHUT-OFF VALVE
S & P	SHELF & POLE
SQ	SQUARE
S.S.	SELECT STRUCTURAL
SS	STAINLESS STEEL
S.SK	SERVICE SINK
ST	STREET
STA	STATION
STD	STANDARD
STL	STEEL
STO	STORAGE
STRL	STRUCTURAL
SUSP	SUSPENDED
SV	SHEET VINYL FLOORING
SW	SHEAR WALL
SYM	SYMMETRICAL
T.	TEMPERED
T.B.	TOWEL BAR
T & B	TOP & BOTTOM
T.C.	TOP OF CURB
TEL	TELEPHONE
TER	TERRAZZO
T & G	TONGUE & GROOVE
TH	THRESHOLD
THK	THICK
T.O.P	TOP OF PLATE
T.P.	TOP OF PAVEMENT
T.P.D.	TOILET PAPER DISPENSER
TRD	TREAD
T.S.	TUBULAR STEEL
T.S.B.	TOP-SET BASE
T.V.	TELEVISION
T.W.	TOP OF WALL
TYP	TYPICAL
UNF	UNFINISHED
U.N.O. U.O.N	UNLESS NOTED OTHERWISE
UR	URINAL
V.C.P.	VITRIOUS CLAY PIPE
V.C.T.	VINYL COMPOSITION TILE
VERT	VERTICAL
VEST	VESTIBULE
V.G.	VERTICAL GRAIN
V.I.F.	VERIFY IN FIELD
V.T.R.	VENT THRU ROOF
V.W.C.	VINYL WALL COVERING
W	WEST, WASHER
W/	WITH
W.C.	WATER CLOSET
W.D.	WINDOW DIMENSION
W.I.	WROUGHT IRON
W.M.F.	WOVEN WIRE FABRIC
WNDW	WINDOW
W/O	WITHOUT
WP	WATERPROOF
W.S.	WOOD SCREWS
WSCT	WAINSCOT
WT	WEIGHT
W.W.M.	WOVEN WIRE MESH

INDEX OF DRAWINGS

SHEET#	SEQ.	DESCRIPTION
ARCHITECTURAL		
G0	1	COVER
G1	2	EXISTING / PROPOSED SITE PLAN
G2	3	CIRCULATION / ACCESS PLAN SITE DETAILS
A1	4	PODIUM LEVEL FLOOR PLAN
A2	5	UNIT PLANS
A3	6	EXTERIOR ELEVATIONS
A4	7	EXTERIOR ELEVATIONS
A4.1	8	COLORED PERSPECTIVE RENDERING
A5	9	BUILDING SECTION
A6	10	DETAILS
LANDSCAPING		
L.00	11	TREE REMOVAL PLAN
L.01	12	LANDSCAPE PLAN-GROUND AND FIRST FLOOR
L.02	13	LANDSCAPE PLAN-ROOF
L.03	14	PLANTING LEGEND AND NOTES
L.04	15	PLANTING DETAILS
L.05	16	HYDROZONE PLAN-GROUND AND FIRST FLOOR
L.06	17	HYDROZONE PLAN-ROOF
L.07	18	IRRIGATION DETAILS
L.08	19	CONCEPT IMAGERY
CIVIL		
C1	20	GRADING AND DRAINAGE PLAN
C2	21	CONCEPTUAL UTILITY PLAN
C3	22	STORMWATER MITIGATION PLAN
C4	23	STORMWATER CONTROL PLAN DETAILS

ARCHITECTURAL SYMBOL LEGEND

	EARTH		PLASTER OR GROUT
	GRAVEL OR ROCK		WOOD - FINISH GRADE
	CONCRETE		WOOD FRAMING (THRU MEMBER)
	MASONRY		WOOD FRAMING (INTERRUPTED MEMBER)
	CERAMIC TILE		INSULATION - BATT
			INSULATION - RIGID

1 / A1 — DETAIL REFERENCE NO. / SHEET WHERE SHOWN

A — WINDOW SCH. LETTER

A / A1 — SECTION REF. LETTER / SHEET WHERE SHOWN

1 / 1 — DOOR SCHEDULE NO. / HARDWARE GRP. NO.

1 / A1 — NOTE REF. NO. / SHEET WHERE SHOWN

1 / 1 — INTERIOR ELEVATION REF. NO.

JOB No.	1412
DATE	OCT 21, 2014

DESCRIPTION	DATE	REV.
RESPONSE TO CITY COMMENTS	9 APR '15	
RESPONSE TO CITY COMMENTS	14 AUG '15	
RESPONSE TO CITY COMMENTS	9 DEC '15	
RESPONSE TO CITY FLOOD COMPLIANCE	25 JAN '16	
RESPONSE TO CITY LETTER 4	25 MAR '16	

PLANNING

ZHANG CONDOS

1316 SOUTH MAIN STREET
MILPITAS, CA

ARCHITECTS
MBA
MARVIN BARBERG ASSOCIATES INC.
1176 LINCOLN AVENUE SAN JOSE CALIFORNIA 95125
PH 408/297-1208X13 FAX 408/297-0384

GENERAL

OWNER
GEORGE ZHANG
641 TERESI LANE
LOS ALTOS, CA 94024
danielzcbc@gmail.com
530-304 9861

APPLICABLE CODES
2013 CBC
2013 CALIFORNIA ELECTRICAL CODE
2013 CMC
2013 CPC
CALGREEN
CALIFORNIA FIRE CODE
CALIFORNIA ENERGY CODE
MUNICIPAL CODE OF CITY OF MILPITAS

BASIS OF DESIGN: THIS PROJECT WILL BE A CERTIFIED GREENPOINT RATED BUILDING MEETING A MINIMUM OF 50 POINTS, OR LEED FOR HOMES CERTIFIED, PER MMC 2014 SECTION 11-20-3.01

DESCRIPTION OF WORK:
THIS PROJECT IS 18 UNITS OF STICK FRAMED CONDOMINIUMS CONSTRUCTED ON A RAISED PODIUM DECK. THE ROOF WILL BE UTILIZED FOR OUTDOOR RECREATION

EXCEPTIONS FROM TASP AND ZONING: THIS PROJECT REQUESTS THE FOLLOWING EXCEPTIONS FROM TASP AND ZONING:

1. SETBACKS: TABLE 5-1 DEVELOPMENT STANDARDS.
2. SETBACKS TO RAIL
3. DESIGN GUIDELINES APPENDIX ITEMS
   - 3.C PARKING AREA BELOW GRADE
   - 4.C HEIGHT OF THE PODIUM TO GRADE
   - 4D VEHICULAR ENTRY TO GARAGE VISIBLE FROM STREET

PUBLIC BENEFIT: IN EXCHANGE FOR THE NECESSARY EXCEPTIONS FROM THE TASP AS DESCRIBED ABOVE THE DEVELOPER WILL CONTRIBUTE $100,000 COMBINED TOTAL TO THE AFFORDABLE HOUSING AND PUBLIC ART FUNDS.

PROJECT INFORMATION

BUILDING USE	RESIDENTIAL
ASSESSOR'S PARCEL NUMBER	86-23-06
ZONING	MULTI-FAMILY, VERY HIGH DENSITY (R4-TOD, 41-60 DU/ACRE)
TYPE OF CONSTRUCTION	1A GARAGE III-A APARTMENTS
OCCUPANCY TYPE	R-2, S2, A-3(ROOF)
STORIES	4 OVER PODIUM
TOTAL NEW BUILDING AREA	GROUND LEVEL 1,309 S.F. PODIUM LEVEL 1 8,123 S.F. PODIUM LEVEL 2 7,941 S.F. PODIUM LEVEL 3 7,941 S.F. ROOF DECK 8574 S.F. TOTAL = 33,888 S.F.
LOT SIZE	17,424 SF = 0.4 ACRE
PROPOSED DENSITY	45 DU / ACRE

TABLE 503:
S2 GARAGE IS TYPE 1A CONSTRUCTION MAX ALLOWABLE AREA 39,000 SF, FULLY FIRE-SPRINKLERED.
R-2 BUILDING III-A CONSTR = 4 STORIES/24,000 SF PER STORY
ALL STORIES ARE LESS THAN MAX ALLOWABLE
A-3 ROOF DECK IS III-A, = 3 STORIES, 14,000 SF PER STORY
ADDED STORY FOR FULLY FIRE-SPRINKLERED.
,
504.2 ALLOWS STORY INCREASE BY ONE.

THE S2 GARAGE IS SEPARATED FROM THE R2 CONSTRUCTION WITH A 3 HOUR FIRE-RATED CONCRETE PODIUM DECK.

SEE SHEET A2 FOR OPENINGS IN PROXIMITY TO SETBACK.

CONSULTANTS

CIVIL + LANDSCAPE ENGINEERS

HMH ENGINEERS
1570 OAKLAND ROAD
SAN JOSE, CA 95131
PH (408) 487-2200

MEGAN CRONAN, ENGINEER
BRIAN GLICK, SENIOR LANDSCAPE ARCHITECT
JACKSON DERLER, PROJECT MANAGER

LOCATION MAP

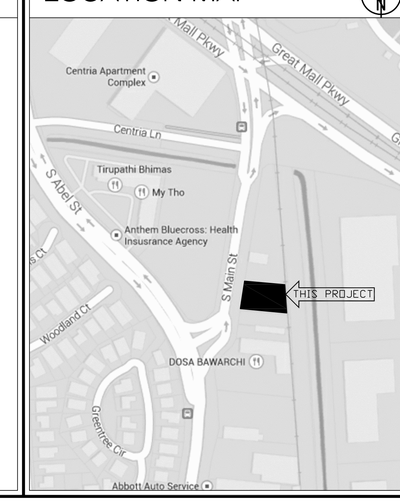

LICENSED ARCHITECT
Marvin Arthur Barberg
No. C-4649
REN.09/15
STATE OF CALIFORNIA

ALL DRAWINGS AND WRITTEN MATERIAL APPEARING HEREIN ARE THE ORIGINAL AND UNPUBLISHED WORK OF THE ARCHITECT, AND MAY NOT BE COPIED OR USED WITHOUT THE WRITTEN CONSENT OF THE ARCHITECT.

COPYRIGHT © 2015

MBA A R C H I T E C T S

SHEET TITLE
COVER

SCALE
CAD FILE 1421-DD-G0.DWG
DRAWN BY AW

SHEET
G0
1 OF 24 SHEETS

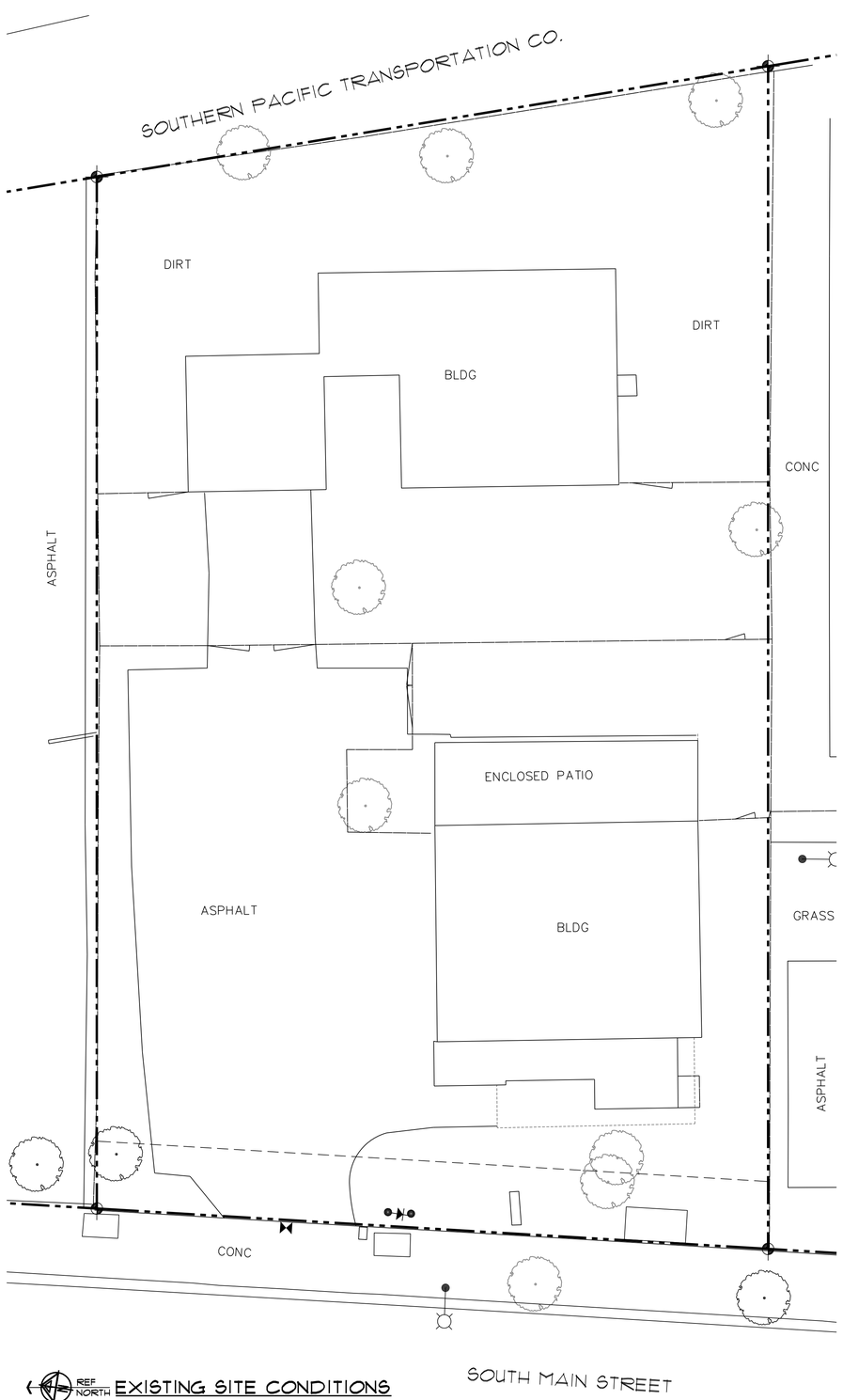

REF NORTH **EXISTING SITE CONDITIONS**

0 5 10 20 40

SCALE: 1" = 10'-0"

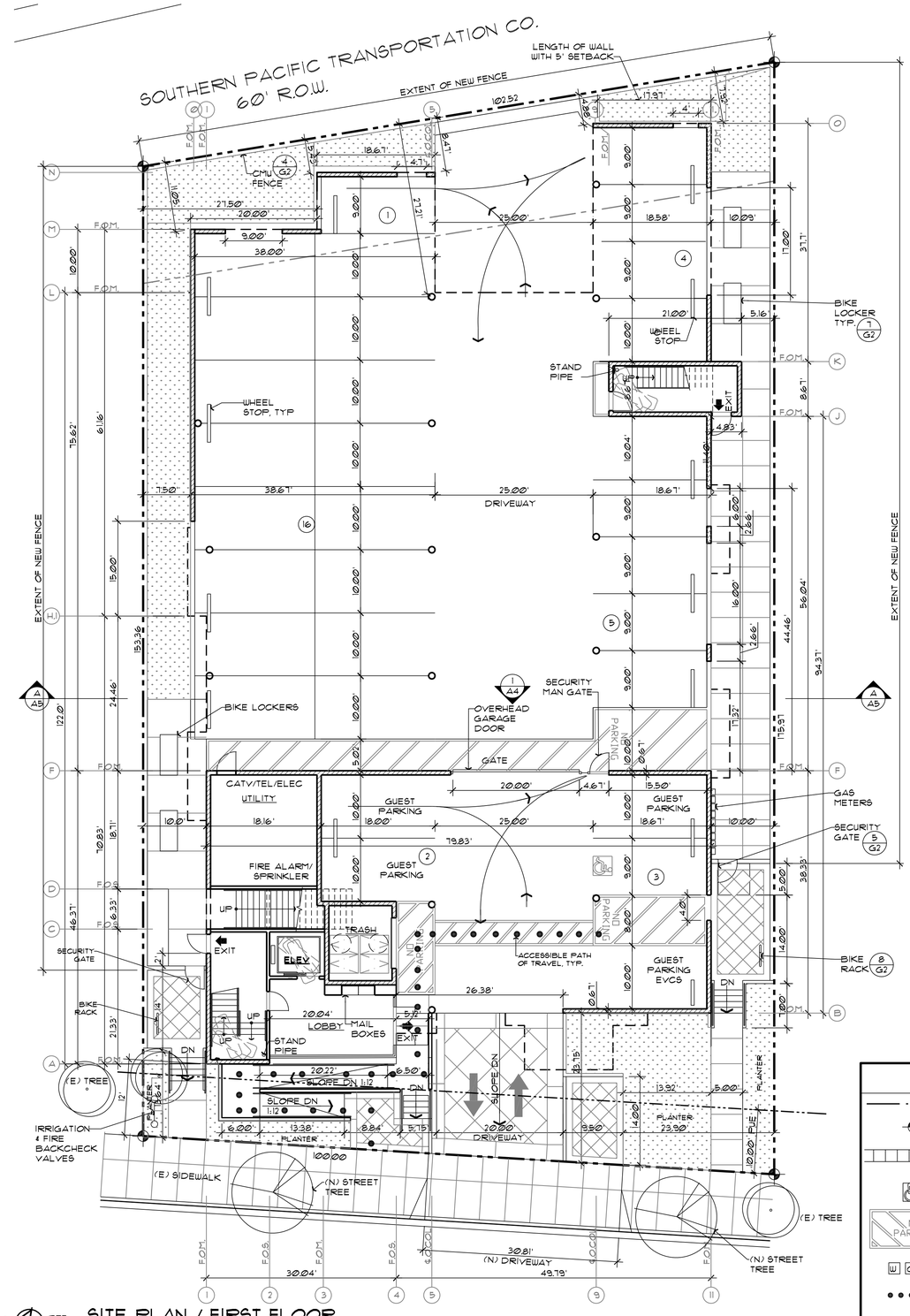

REF NORTH **SITE PLAN / FIRST FLOOR**

0 5 10 20 40

SCALE: 1" = 10'-0"

SITE INFORMATION

LAND 17,424 S.F. OR 0.4 ACRE

DWELLINGS
41-60 DU/AC PER R4
17-24 DU ALLOWED
18 DU PROPOSED 6 EACH: 1, 2 & 3 BR

DWELLINGS	FL. AREA	QTY.
UNIT A-	1208 SF 3 BEDROOM	6
UNIT B-	962 SF 2 BEDROOM	6
UNIT C	962 SF 1 BEDROOM	6
	TOTAL =	18

PARKING
1 BEDROOM = 1.5 CARS EACH (COVERED
2/3 BEDROOM= 2 CARS EACH (COVERED)
TOD ALLOWS 20% REDUCTION
=1.2 CARS EACH FOR 1 BR
=1.6 CARS EACH FOR 2/3 BR

12 DU x 1.6 CARS = 19.2 CARS
6 DU X 1.2 CARS = 7.2 CARS
SUBTOTAL = 26.4 CARS

GUEST PARKING @ 15% OF 26.4 = 4 CARS
TOTAL REQUIRED 31 CARS
TOTAL PROVIDED 31 CARS
ALL PARKING IS COVERED

BIKE PARKING
SHORT TERM (GUEST) = 5% OF PARKING
= 31X5% = 2
LONG TERM = 25% OF PARKING
= 31X25% = 8
TOTAL REQUIRED =10
PROPOSED =10

OPEN SPACE AND PRIVATE SPACE SEE SHEET A1.

SITE PLAN LEGEND

- PROPERTY LINE
- PROPERTY LINE CORNER
- CONC WALKS
- ACCESSIBLE PARKING STALL
- NO PARKING — PARKING LOADING ZONE/ PATH OF TRAVEL
- W G E — WATER/GAS/ELEC METERS
- ACCESSIBLE PATH OF TRAVEL
- C — COMPACT PARKING
- 3 — PARKING COUNTS

JOB No. 1412
DATE 21 OCT 2015

DESCRIPTION	DATE	REV.
RESPONSE TO CITY COMMENTS	9 APR 15	
RESPONSE TO CITY COMMENTS	15 AUG 15	
RESPONSE TO CITY COMMENTS	9 DEC '15	
RAMP REVISION	23 DEC '15	
RESPONSE TO CITY FLOOD COMPLIANCE	25 JAN '16	
RESPONSE TO CITY LETTER 4	25 MAR '16	
RAMP IN THE PUE	21 APR '16	

PLANNING

ZHANG CONDOS

1316 SOUTH MAIN STREET
MILPITAS, CA

MBA ARCHITECTS
MARVIN BARBURG ASSOCIATES INC.
WWW.MBA-ARCHITECTS.NET
1176 LINCOLN AVENUE SAN JOSE CALIFORNIA 95125
PH 408/297-0288X13 FAX 408/297-0384

LICENSED ARCHITECT
Marvin Arthur Barburg
No. C-4649
REN. 09/17
STATE OF CALIFORNIA

ALL DRAWINGS AND WRITTEN MATERIAL APPEARING HEREIN ARE THE ORIGINAL AND UNPUBLISHED WORK OF THE ARCHITECT, AND MAY NOT BE COPIED OR USED WITHOUT THE WRITTEN CONSENT OF THE ARCHITECT.

COPYRIGHT © 2015

MBA ARCHITECTS

SHEET TITLE
EXISTING/DEMO SITE PLAN PROPOSED SITE/GROUND FL PLAN

SCALE AS SHOWN
CAD FILE 1412-DD-G1.DWG
DRAWN BY AW

SHEET G1
2 OF SHEETS

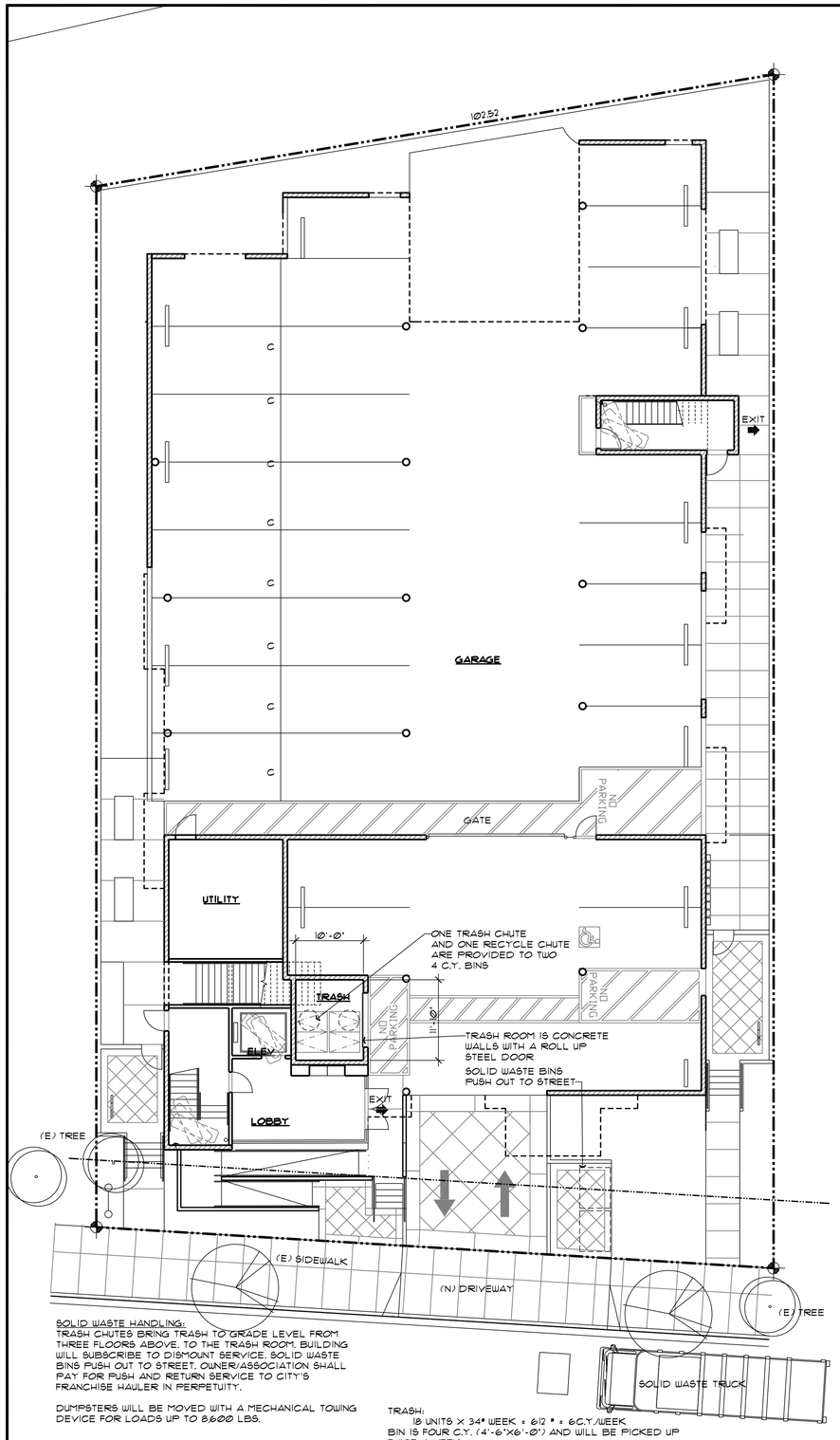

SOLID WASTE HANDLING:
TRASH CHUTES BRING TRASH TO GRADE LEVEL FROM THREE FLOORS ABOVE, TO THE TRASH ROOM. BUILDING WILL SUBSCRIBE TO DISMOUNT SERVICE. SOLID WASTE BINS PUSH OUT TO STREET. OWNER/ASSOCIATION SHALL PAY FOR PUSH AND RETURN SERVICE TO CITY'S FRANCHISE HAULER IN PERPETUITY.

DUMPSTERS WILL BE MOVED WITH A MECHANICAL TOWING DEVICE FOR LOADS UP TO 8600 LBS.

TRASH:
18 UNITS X 34# WEEK = 612 # = 6C.Y./WEEK
BIN IS FOUR C.Y. (4'-6"X6'-0") AND WILL BE PICKED UP TWICE A WEEK

RECYCLE:
18 UNITS X 7 = 126 # = 2.8 CY.
BIN IS FOUR C.Y. AND WILL BE PICKED UP ONCE A WEEK.

SOLID WASTE HANDLING PLAN
SCALE: 1"=10'-0"

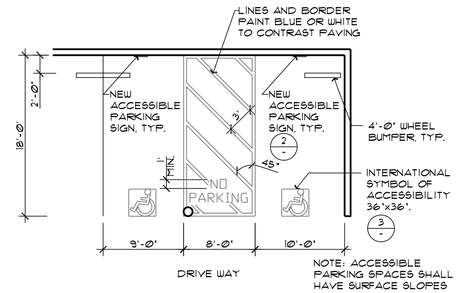

NOTE: ACCESSIBLE PARKING SPACES SHALL HAVE SURFACE SLOPES NOT GREATER THAN 2.1 PER FOOT IN ANY DIRECTION PER SEC. 1129B.3.4

1. IDENTIFY EACH PARKING SPACE WITH A PERMANENTLY AFFIXED REFLECTORIZED SIGN CONSTRUCTED OF PORCELAIN ON STEEL, BEADED TEXT, OR EQUAL, DISPLAYING THE INTERNATIONAL SYMBOL OF ACCESSIBILITY. THE SIGN SHALL BE NO SMALLER THAN 10 SQ. INCHES IN AREA AND POSTED A MIN. HT. OF 80 INCHES FROM THE BOTTOM OF THE SIGN TO THE PARKING SPACE FINISHED GRADE. SIGNS MAY ALSO BE CENTERED ON THE WALL AT THE INTERIOR END OF THE PARKING SPACE.

2. SPACES RESERVED FOR VANS SHALL HAVE AN ADDITIONAL SIGN OR ADDITIONAL LANGUAGE STATING "VAN ACCESSIBLE" BELOW THE SYMBOL OF ACCESSIBILITY.

3. THE SURFACE OF EACH ACCESSIBLE PARKING SPACE SHALL HAVE A SURFACE IDENTIFICATION :

   1. BY OUTLINING A PROFILE VIEW OF A WHEELCHAIR WITH OCCUPANT IN WHITE ON BLUE BACKGROUND. THE PROFILE VIEW SHALL BE ALIGNED WITH THE END OF THE STALL OR SPACE ADJACENT TO THE TRAFFIC AISLE SO THAT IT IS VISIBLE TO A TRAFFIC ENFORCEMENT OFFICER WHEN A VEHICLE IS PROPERLY PARKED IN THE SPACE AND SHALL BE 36 INCHES HIGH BY 36 INCHES WIDE.

4. AN ADDITIONAL SIGN SHALL BE POSTED IN A CONSPICUOUS PLACE AT EACH ENTRANCE TO OFF-STREET PARKING FACILITIES, OR IMMEDIATELY ADJACENT TO AND VISIBLE FROM EACH ACCESSIBLE STALL OR SPACE. THE SIGN SHALL NOT BE LESS THAN 17" BY 22" IN SIZE WITH 1" HIGH MIN. LETTERING WHICH CLEARLY AND CONSPICUOUSLY STATES THE FOLLOWING: "UNAUTHORIZED VEHICLES PARKED IN DESIGNATED ACCESSIBLE SPACES NOT DISPLAYING DISTINGUISHING PLACARDS OR SPECIAL LICENSE PLATES ISSUED FOR PERSONS WITH DISABILITIES WILL BE TOWED AWAY AT THE OWNER'S EXPENSE. TOWED VEHICLES MAY BE RECLAIMED AT _____ OR BY TELEPHONING _____." BLANK SPACES ARE TO BE FILLED IN WITH APPROPRIATE INFORMATION AS A PERMANENT PART OF THE SIGN.

1 ACCESSIBLE PARKING 1/8" = 1'-0"

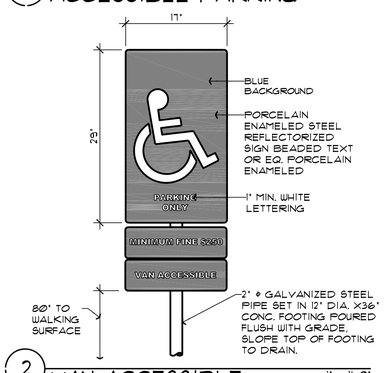

2 VAN ACCESSIBLE PARKING SIGNAGE 1" = 1'-0"

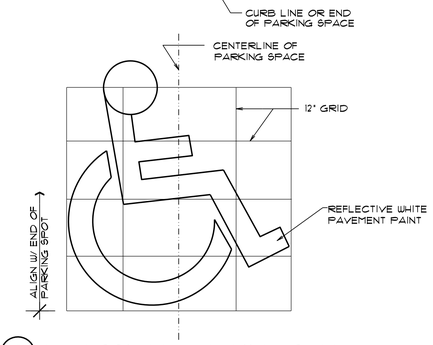

3 ACCESSIBLE PARKING SYMBOL N.T.S.

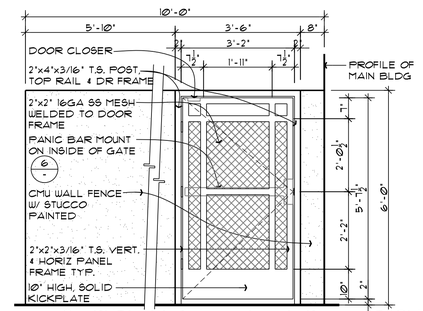

5 SECURITY GATE & FENCE @ FRONT ELEVATION 1/2" = 1'-0"

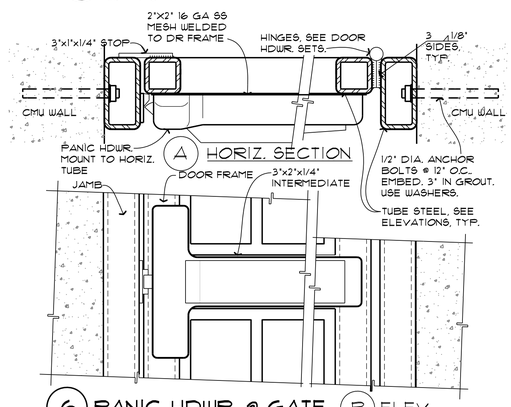

6 PANIC HDWR. @ GATE B ELEV. 3" = 1'-0"

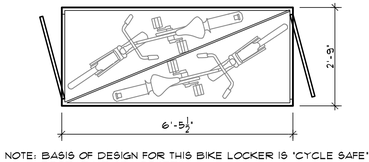

NOTE: BASIS OF DESIGN FOR THIS BIKE LOCKER IS 'CYCLE SAFE' ECOPARK BIKE LOCKERS

7 BIKE LOCKER SCALE: ½"=1'-0"

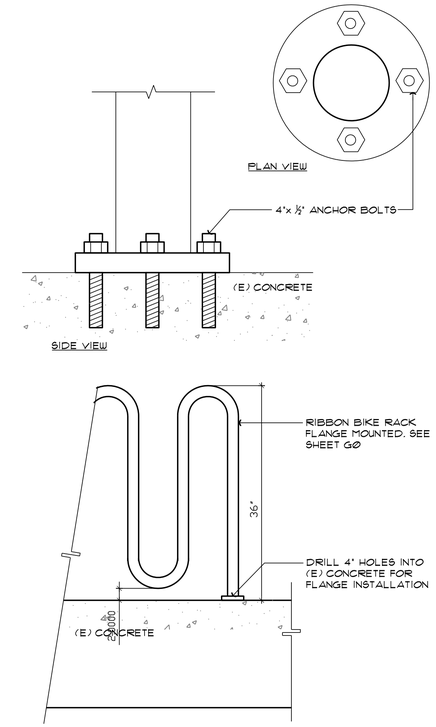

8 BIKE RACK SCALE: 1"=1'-0"

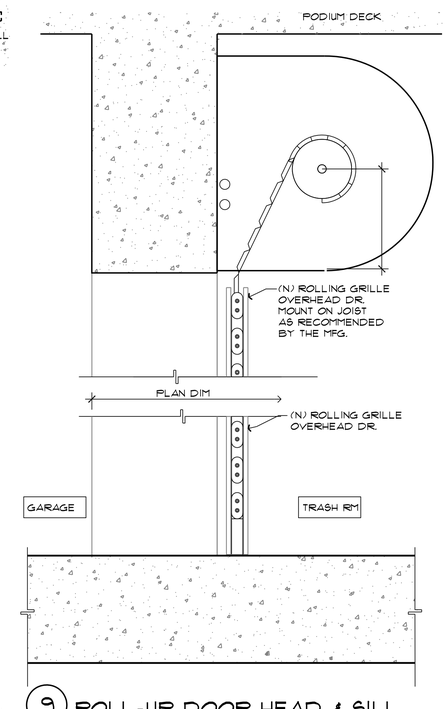

9 ROLL-UP DOOR HEAD & SILL SCALE: 1 1/2"=1'-0"

JOB No.	1412
DATE	21 OCT 2015

DESCRIPTION	DATE	REV.
RESPONSE TO CITY COMMENTS	9 APR 15	
RESPONSE TO CITY FLOOD COMPLIANCE	25 JAN '16	
RESPONSE TO CITY FLOOD COMPLIANCE	25 JAN '16	
RESPONSE TO CITY COMMENT LETTER 4	25 APR '16	

PLANNING

ZHANG CONDOS

1316 SOUTH MAIN STREET
MILPITAS, CA

MARVIN ARTHUR BERNBURG ASSOCIATES INC
MBA ARCHITECTS
1777 LINCOLN AVENUE SAN JOSE CALIFORNIA 95125
PH 408/297-0288X13 FAX 408/297-1084

LICENSED ARCHITECT
Marvin Arthur Bernburg
No. C-4649
REN. 09/15
STATE OF CALIFORNIA

ALL DRAWINGS AND WRITTEN MATERIAL APPEARING HEREIN ARE THE ORIGINAL AND UNPUBLISHED WORK OF THE ARCHITECT, AND MAY NOT BE COPIED OR USED WITHOUT THE WRITTEN CONSENT OF THE ARCHITECT.

COPYRIGHT © 2015

MBA A R C H I T E C T S

SHEET TITLE
SOLID WASTE HANDLING PLAN

SITE DETAILS

SCALE
CAD FILE 1412-DD-G2.DWG
DRAWN BY AW

SHEET
G2
3 OF SHEETS

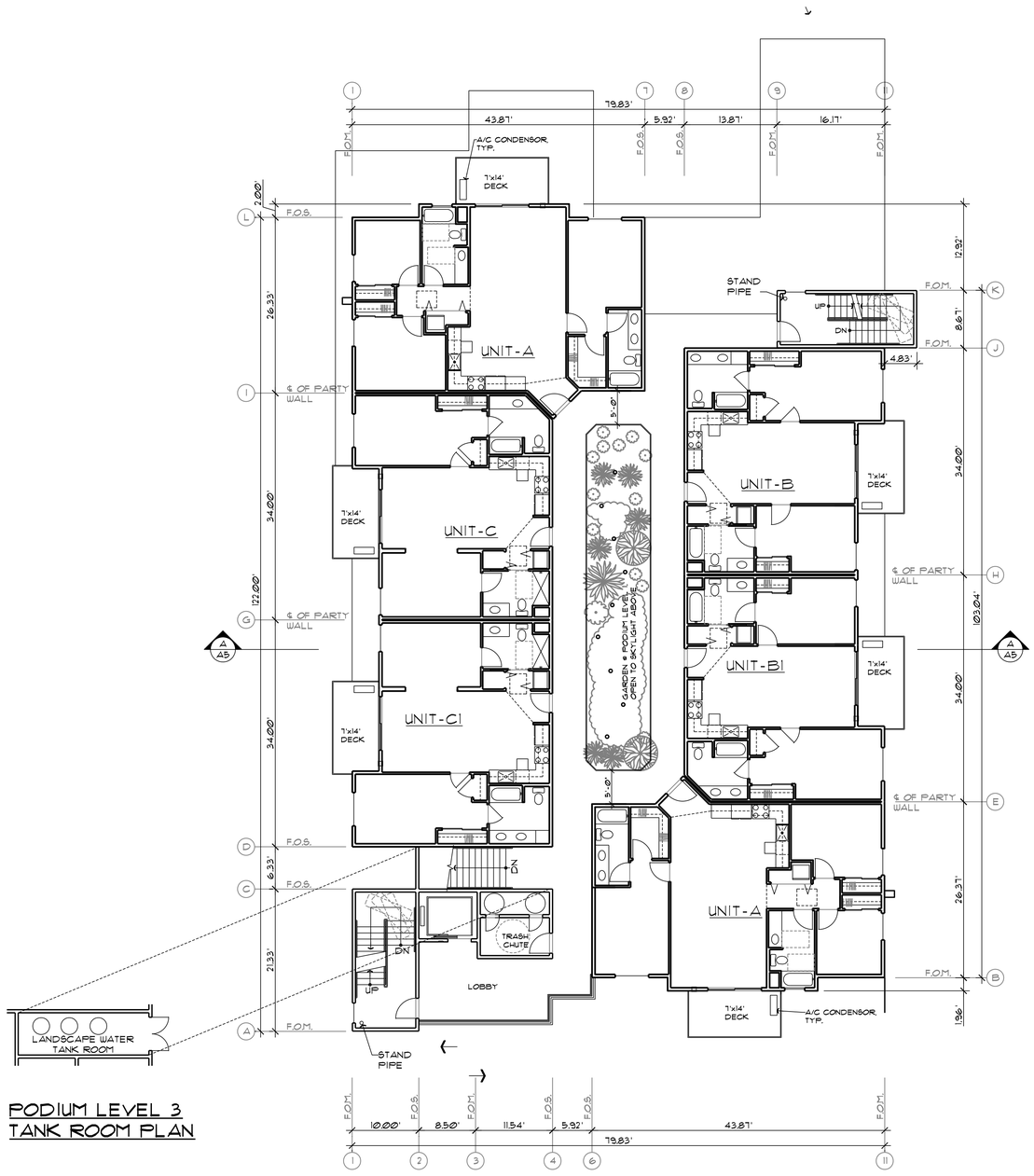

PODIUM LEVEL 3 TANK ROOM PLAN

REF NORTH

PODIUM LEVEL 1, 2, 3 FLOOR PLANS

0 5 10 20 40

SCALE: 1" = 10'-0"

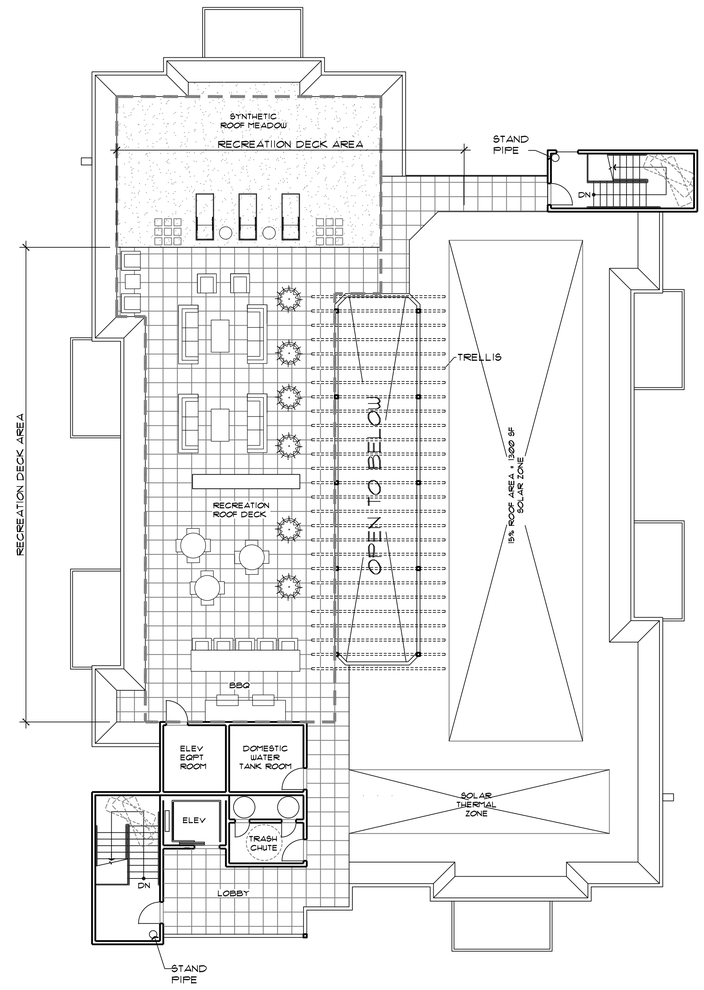

REF NORTH

ROOF PLAN

0 5 10 20 40

SCALE: 1" = 10'-0"

OPEN SPACE INFORMATION

OPEN SPACE
REQUIRED: 25% OF LOT AREA=17,424 SF X 25%
=4,356 SF

PROVIDED:
PRIVATE SPACE=
98 SF X 18 = 1,764 SF
RECREATION ROOF DECK = 2,644 SF
TOTAL = 4,408 SF

ROOF DECK USAGE:

BUILDING AREA:	780 SF
RECREATION AREA:	2644 SF
SOLAR ZONE:	1300 SF
SOLAR THERMAL ZONE	326 SF
PARAPET AREA:	1089 SF
CIRCULATION AREA:	2435 SF
TOTAL AREA:	8574 SF

ROOF DECK OLF/EXITING:

RECREATION AREA 2644 SF/15 = 177 OCCUPANTS
177 OCCUPANTS X .3 = 53" WIDTH FOR STAIRS
177 OCCUPANTS X .2" = 35.4" WIDTH FOR OTHERS

2 EXIT STAIRS 48" WIDE ARE ACCESSED DIRECTLY FROM THE RECREATION DECK ON THE ROOF.

DOORS TO THE STAIRS ARE 36" MINIMUM WIDTH.

UNIT EXITING:

UNIT ENTRIES ARE 20 MINUTE FIRE-RATED DOORS OPENING INTO A 1 HOUR FIRE-RATED CORRIDOR.

THE CORRIDOR HAS OPEN ENDS (NON-PROTECTED OPENINGS) IN ACCORDANCE WITH 705.8

THE STAIRS ARE VERTICAL EXITS IN 2 HOUR FIRE-RESISTIVE ENCLOSURES WHICH LEAD DIRECTLY TO A YARD OR PUBLIC WAY.

THE ELEVATOR WILL HAVE STANDBY POWER AND BE USED AS AN ACCESSIBLE MEANS OF EGRESS IN THIS 4-STORY BUILDING.

JOB No. 1412
DATE 21 OCT 2014

DESCRIPTION	DATE	REV.
RESPONSE TO CITY COMMENTS	12/9/15	
RESPONSE TO CITY FLOOD COMPLIANCE	1/25/16	
RESPONSE TO CITY LETTER 4	3/25/16	

PLANNING

ZHANG CONDOS

1316 SOUTH MAIN STREET
MILPITAS, CA

MARVIN ARTHUR BAMBURG ASSOCIATES INC.
MBA ARCHITECTS
1974 LINCOLN AVENUE SAN JOSE CALIFORNIA 95125
PH 408/297-0228X13 FAX 408/297-1084

LICENSED ARCHITECT
Marvin Arthur Bamburg
No. C-4649
REN. 09/15
STATE OF CALIFORNIA

ALL DRAWINGS AND WRITTEN MATERIAL APPEARING HEREIN ARE THE ORIGINAL AND UNPUBLISHED WORK OF THE ARCHITECT, AND MAY NOT BE COPIED OR USED WITHOUT THE WRITTEN CONSENT OF THE ARCHITECT.

COPYRIGHT © 2015

MBA A R C H I T E C T S

SHEET TITLE
PODIUM LEVEL 1,2,3 FL PLANS
ROOF PLAN

SCALE
CAD FILE 1412-DD-A1.DWG
DRAWN BY AW

SHEET
A1
4 OF SHEETS

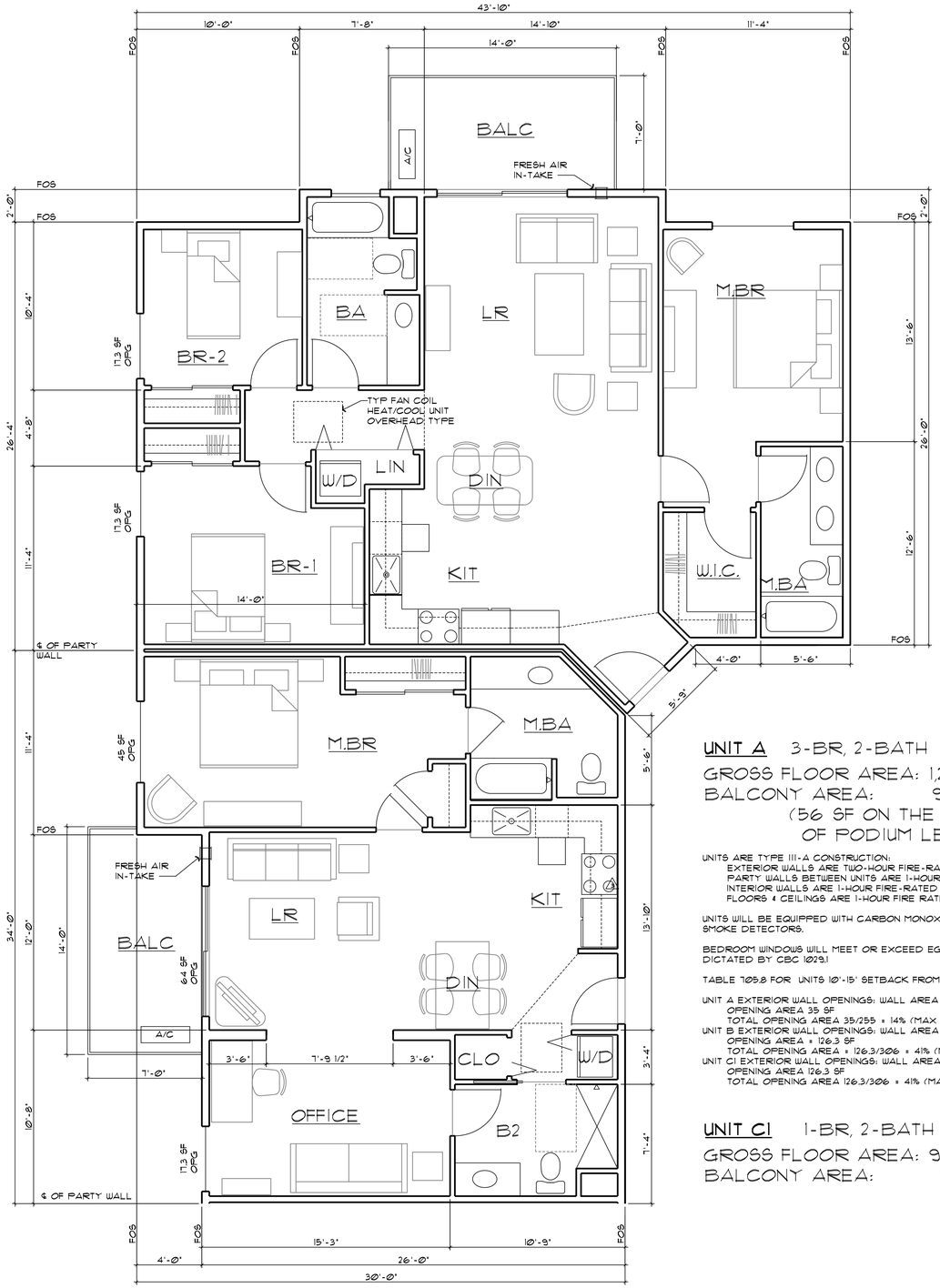

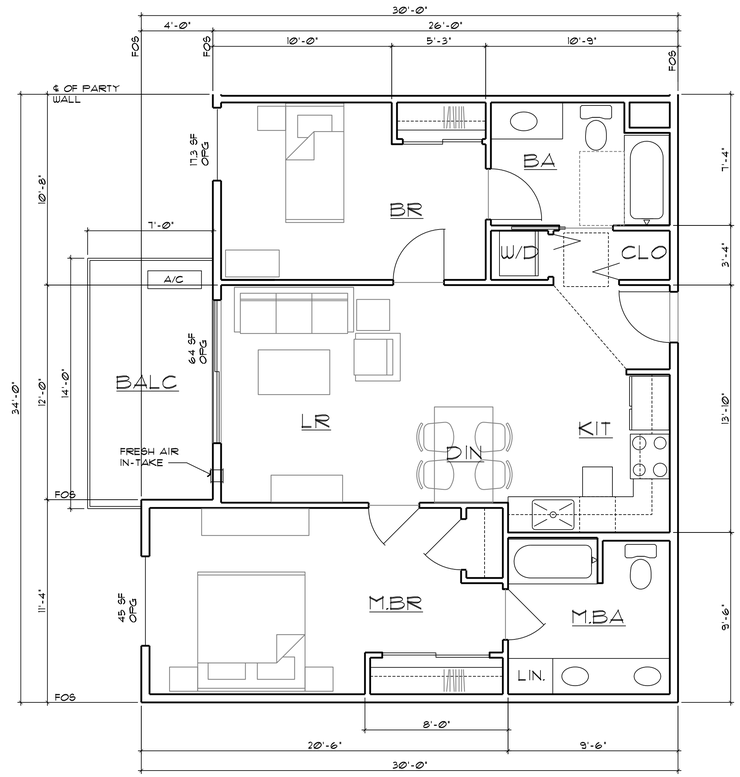

UNIT A 3-BR, 2-BATH

GROSS FLOOR AREA: 1,211 SF
BALCONY AREA: 98 SF
(56 SF ON THE FRONT OF PODIUM LEVEL 1)

UNITS ARE TYPE III-A CONSTRUCTION:
EXTERIOR WALLS ARE TWO-HOUR FIRE-RATED
PARTY WALLS BETWEEN UNITS ARE 1-HOUR FIRE-RATED
INTERIOR WALLS ARE 1-HOUR FIRE-RATED
FLOORS & CEILINGS ARE 1-HOUR FIRE RATED

UNITS WILL BE EQUIPPED WITH CARBON MONOXIDE SENSORS AND SMOKE DETECTORS.

BEDROOM WINDOWS WILL MEET OR EXCEED EGRESS REQUIREMENTS DICTATED BY CBC 1029.1

TABLE 705.8 FOR UNITS 10'-15' SETBACK FROM PROPERTY LINE:

UNIT A EXTERIOR WALL OPENINGS: WALL AREA 28.33 X9 = 255 SF
OPENING AREA 35 SF
TOTAL OPENING AREA 35/255 = 14% (MAX ALLOWABLE 45%)
UNIT B EXTERIOR WALL OPENINGS: WALL AREA 34 X 9 = 306 SF
OPENING AREA = 126.3 SF
TOTAL OPENING AREA = 126.3/306 = 41% (MAX ALLOWABLE 45%)
UNIT C1 EXTERIOR WALL OPENINGS: WALL AREA 34 X9 = 306 SF
OPENING AREA 126.3 SF
TOTAL OPENING AREA 126.3/306 = 41% (MAX ALLOWABLE 45%)

UNIT C1 1-BR, 2-BATH

GROSS FLOOR AREA: 922 SF
BALCONY AREA: 96 SF

UNIT B 2-BR, 2-BATH

GROSS FLOOR AREA: 929 SF
BALCONY AREA: 96 SF

0 1 2 4 8 16
SCALE: 1/4" = 1'-0"

JOB No.	1412
DATE	OCT 21, 2014

DESCRIPTION	DATE	REV.
CUP SUBMIT 3	8/21/15	1
CUP SUBMIT 4	10/07/15	2
RESPONSE TO CITY COMMENTS	12/9/15	
RESPONSE TO CITY COMMENT LETTER 4	3/25/16	3

PLANNING

ZHANG CONDOS

1316 SOUTH MAIN STREET
MILPITAS, CA

MARVIN BAMBURG ASSOCIATES INC.
ARCHITECTS
MBA
1174 LINCOLN AVENUE SAN JOSE CALIFORNIA 95125
PH 408/297-0288X13 FAX 408/297-0384

LICENSED ARCHITECT
Marvin Arthur Bamburg
No. C-4649
REN. 09/15
STATE OF CALIFORNIA

ALL DRAWINGS AND WRITTEN MATERIAL APPEARING HEREIN ARE THE ORIGINAL AND UNPUBLISHED WORK OF THE ARCHITECT, AND MAY NOT BE COPIED OR USED WITHOUT THE WRITTEN CONSENT OF THE ARCHITECT.

COPYRIGHT © 2015

MBA A R C H I T E C T S

SHEET TITLE
UNIT PLANS

SCALE
CAD FILE 1412-DD-A2.DWG
DRAWN BY AW

SHEET
A2
5 OF SHEETS

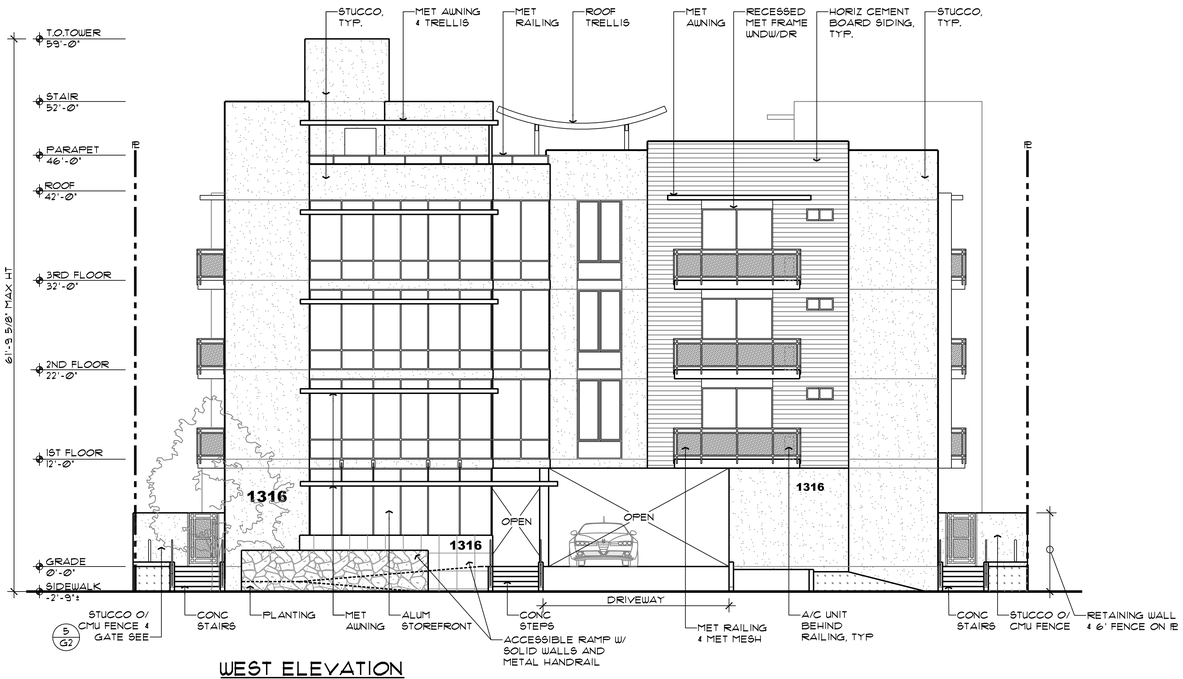

WEST ELEVATION

0 1 2 4 8 16 32

SCALE: 1/8" = 1'-0"

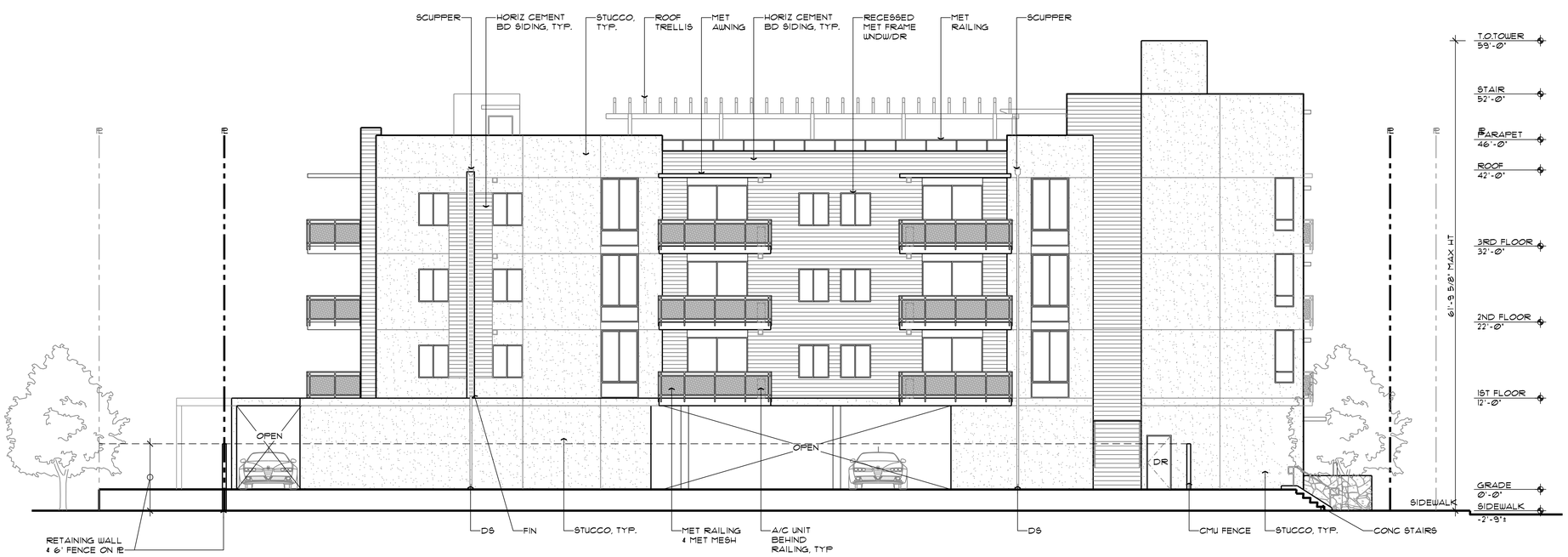

NORTH ELEVATION

0 1 2 4 8 16 32

SCALE: 1/8" = 1'-0"

JOB No. 1412

DATE OCT 21, 2014

DESCRIPTION	DATE	REV.
RESPONSE TO CITY COMMENTS	4/9/15	
RESPONSE TO CITY LETTER 4	3/25/16	
RAMP IN PUE	4/25/16	

PLANNING

ZHANG CONDOS

1316 SOUTH MAIN STREET
MILPITAS, CA

MBA ARCHITECTS
MARVIN BARBURG ASSOCIATES INC.
WWW.MBAARCHITECTS.NET
1176 LINCOLN AVENUE SAN JOSE CALIFORNIA 95125
PH 408/297-0288X13 FAX 408/297-0384

LICENSED ARCHITECT
Marvin Arthur Barburg
No. C-4649
REN. 09/17
STATE OF CALIFORNIA

ALL DRAWINGS AND WRITTEN MATERIAL APPEARING HEREIN ARE THE ORIGINAL AND UNPUBLISHED WORK OF THE ARCHITECT, AND MAY NOT BE COPIED OR USED WITHOUT THE WRITTEN CONSENT OF THE ARCHITECT.

COPYRIGHT © 2015

MBA ARCHITECTS

SHEET TITLE

EXTERIOR ELEVATIONS

SCALE

CAD FILE 1412-DD-A3.DWG

DRAWN BY AW

SHEET

A3

6 OF SHEETS

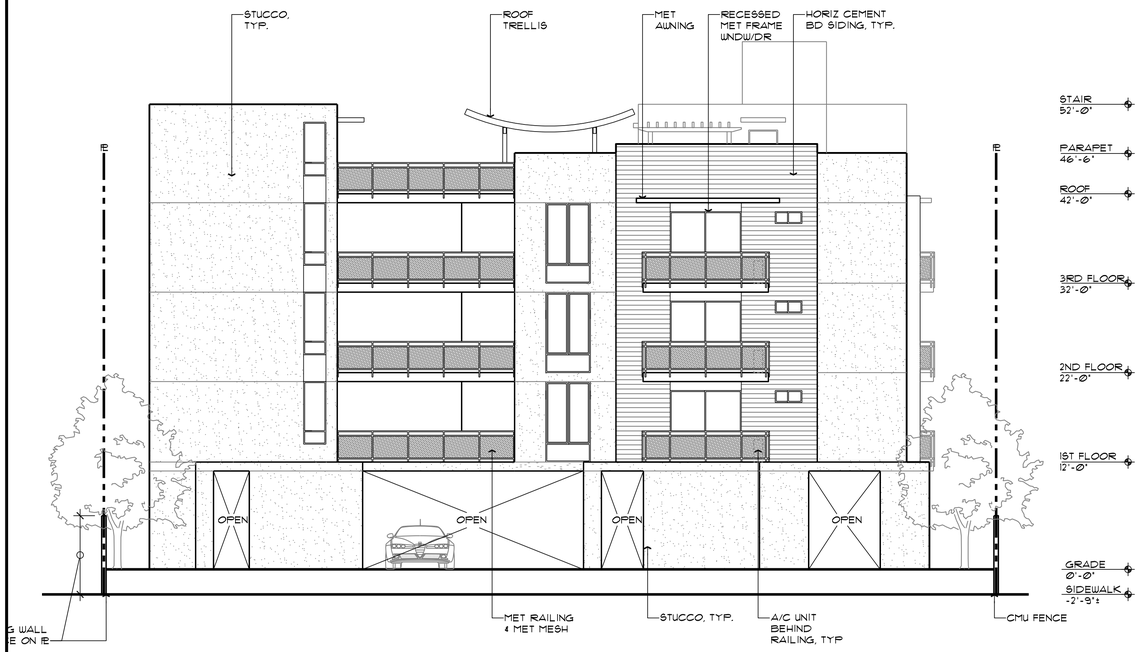

EAST ELEVATION

012 4 8 16 32

SCALE: 1/8" = 1'-0"

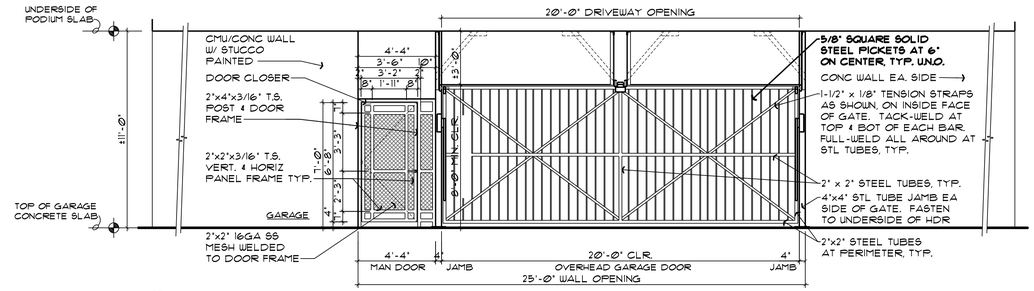

1 OVERHEAD GATE & MAN GATE IN GARAGE-ELEVATION

1/4" = 1'-0"

FINAL OVERHEAD GATE DESIGN, ROLLERS, CHANNELS, HANGER ANGLES, ELECTRIC MOTOR, PULL CHAIN, PIVOT ARM, SWING, ETC. BY GARAGE DOOR OPENER CONTRACTOR, TYP. OVERHEAD GATE OPERATOR TO BE 'OVERHEAD 200' BY 'ALL-O-MATIC' OR APPROVED EQUAL (UL #325 & 991).

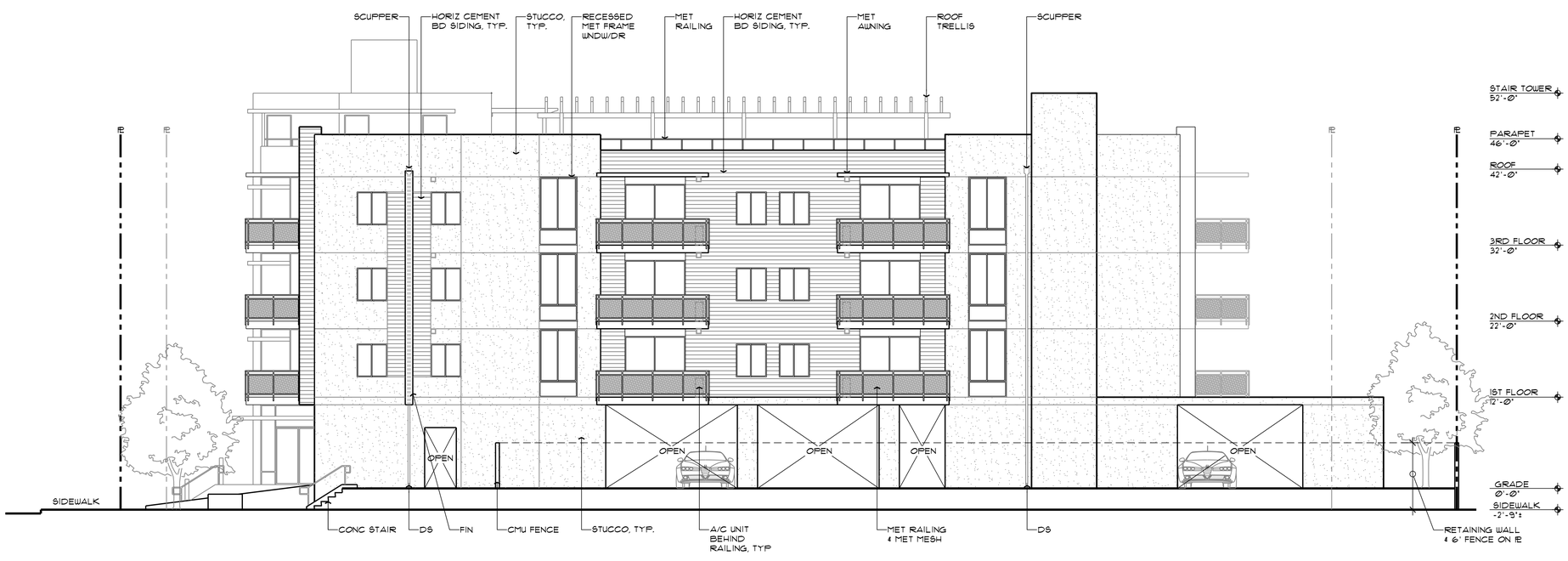

SOUTH ELEVATION

012 4 8 16 32

SCALE: 1/8" = 1'-0"

JOB No.	1412
DATE	OCT 21, 2014

DESCRIPTION	DATE	REV.
RESPONSE TO CITY COMMENTS	4/9/15	
RESPONSE TO CITY FLOOD COMPLIANCE	1/25/16	
RESPONSE TO CITY LETTER & RAMP IN PUE	3/25/16	
	4/25/16	

PLANNING

ZHANG CONDOS

1316 SOUTH MAIN STREET
MILPITAS, CA

MARVIN BARBURG ASSOCIATES, INC.
MBA ARCHITECTS
1174 LINCOLN AVENUE SAN JOSE CALIFORNIA 95125
PH 408/297-0289 X13 FAX 408/297-0384

LICENSED ARCHITECT
Marvin Arthur Barburg
No. C-4649
REN. 09/17
STATE OF CALIFORNIA

ALL DRAWINGS AND WRITTEN MATERIAL APPEARING HEREIN ARE THE ORIGINAL AND UNPUBLISHED WORK OF THE ARCHITECT, AND MAY NOT BE COPIED OR USED WITHOUT THE WRITTEN CONSENT OF THE ARCHITECT.

COPYRIGHT © 2015

MBA ARCHITECTS

SHEET TITLE

EXTERIOR ELEVATIONS

SCALE

CAD FILE 1412-DD-A4.DWG

DRAWN BY AW

SHEET

A4

7 OF SHEETS

NORTHWEST

SOUTHEAST

JOB No.	1412
DATE	AUG 17, 2015

DESCRIPTION	DATE	REV.
RESPONSE TO CITY COMMENTS	9 DEC '15	
RESPONSE TO CITY FLOOD COMPLIANCE	25 JAN '16	

PLANNING

ZHANG CONDOS

1316 SOUTH MAIN STREET
MILPITAS, CA

MARVIN BARNBURG ASSOCIATES INC
MBA ARCHITECTS
1174 LINCOLN AVENUE SAN JOSE CALIFORNIA 95125
PH 408/297-0288X13 FAX 408/297-1034

LICENSED ARCHITECT
Marvin Arthur Barnburg
No. C-4649
REN. 09/15
STATE OF CALIFORNIA

ALL DRAWINGS AND WRITTEN MATERIAL APPEARING HEREIN ARE THE ORIGINAL AND UNPUBLISHED WORK OF THE ARCHITECT, AND MAY NOT BE COPIED OR USED WITHOUT THE WRITTEN CONSENT OF THE ARCHITECT.

COPYRIGHT © 2015

MBA A R C H I T E C T S

SHEET TITLE
COLORED PERSPECTIVE RENDERING

SCALE
CAD FILE 1412-DD-A4.1.DWG
DRAWN BY AW

SHEET
A4.1
8 OF SHEETS

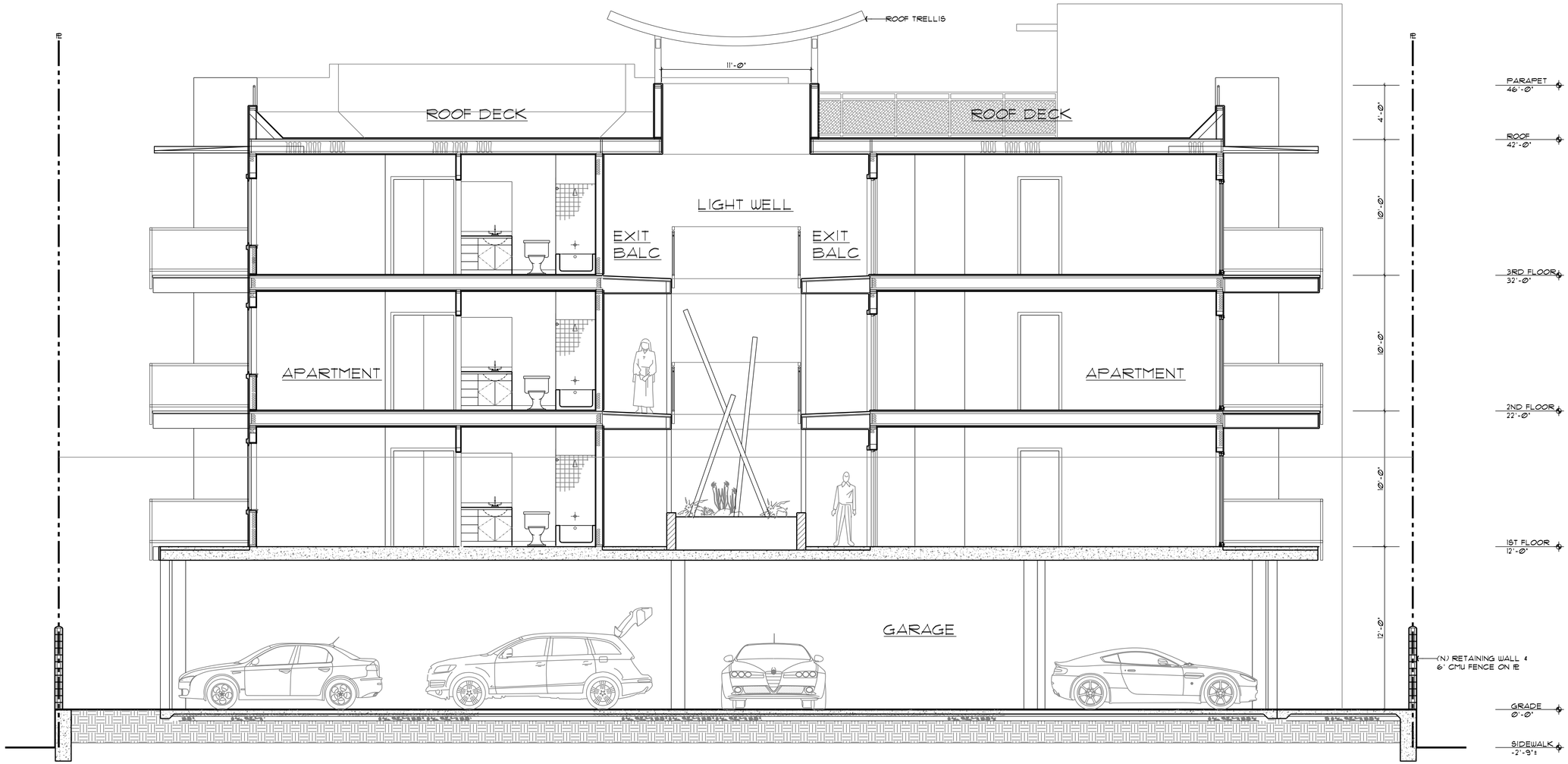

A-A SECTION

0 1 2 4 8 16

SCALE: 1/4" = 1'-0"

JOB No.	1412
DATE	OCT 21, 2014

DESCRIPTION	DATE	REV.
RESPONSE TO CITY COMMENTS	9 APR 15	
RESPONSE TO CITY COMMENTS	9 DEC '15	
RESPONSE TO CITY FLOOD COMPLIANCE	25 JAN '16	

PLANNING

ZHANG CONDOS

1316 SOUTH MAIN STREET
MILPITAS, CA

MBA ARCHITECTS
MARVIN BARBERG ASSOCIATES, INC.
1170 LINCOLN AVENUE SAN JOSE CALIFORNIA 95125
PH 408/297-0288X13 FAX 408/297-0384

LICENSED ARCHITECT
Marvin Arthur Barberg
No. C-4649
REN. 09/15
STATE OF CALIFORNIA

ALL DRAWINGS AND WRITTEN MATERIAL APPEARING HEREIN ARE THE ORIGINAL AND UNPUBLISHED WORK OF THE ARCHITECT, AND MAY NOT BE COPIED OR USED WITHOUT THE WRITTEN CONSENT OF THE ARCHITECT.

COPYRIGHT © 2015

MBA ARCHITECTS

SHEET TITLE
BUILDING SECTIONS

SCALE
CAD FILE 1412-DD-A2.DWG
DRAWN BY AW

SHEET
A5
9 OF SHEETS

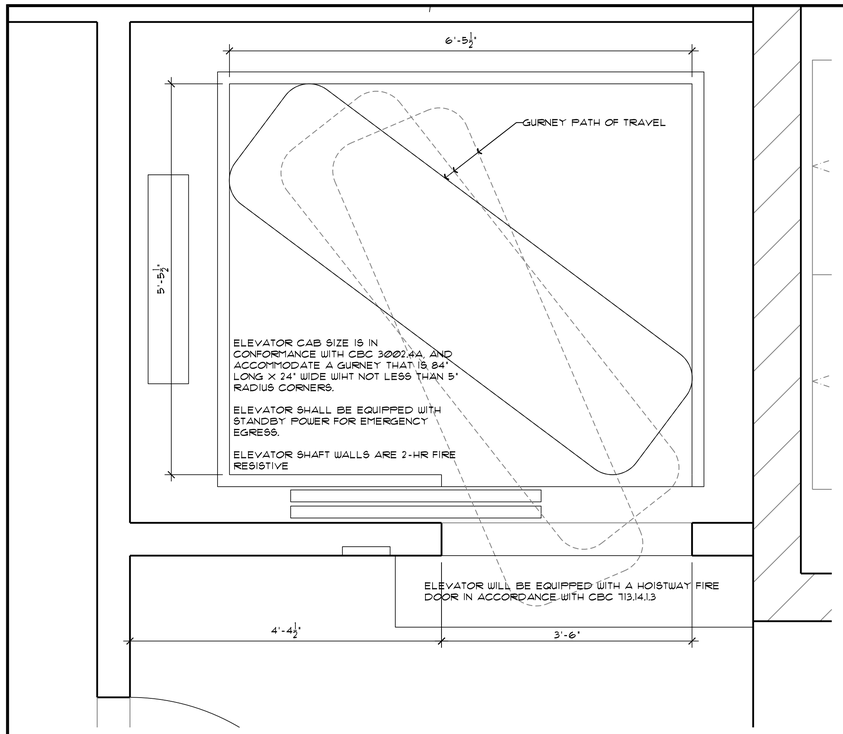

1 ELEVATOR PLAN
1"=1'-0"

NOTE: ELEVATOR IS MODELED ON OTIS ELEVATOR GEN2 3500 WITH SIDE OPENING DOOR.

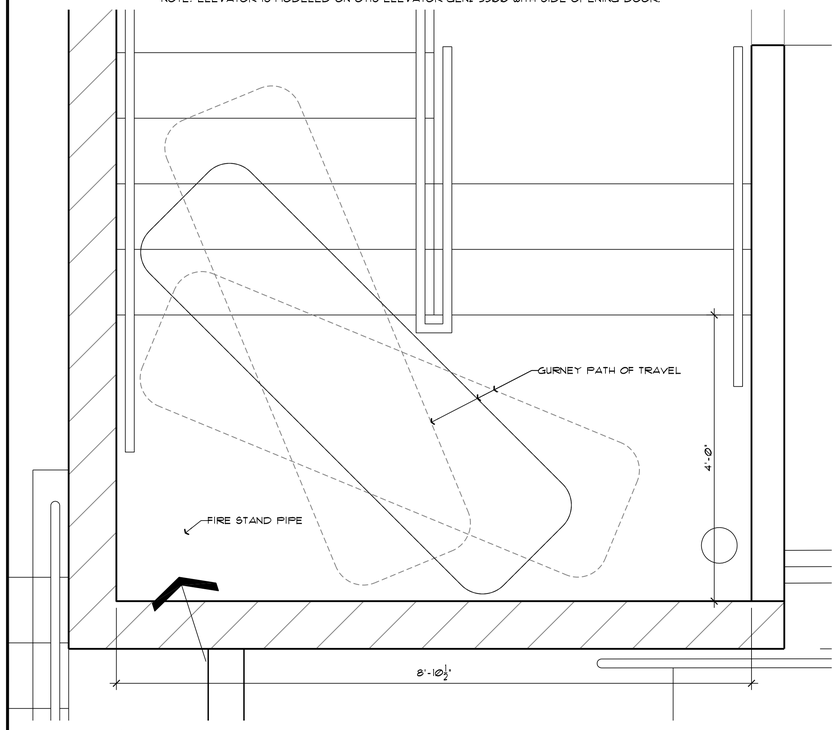

2 STAIR CASE PLAN
1"=1'-0"

NOTE: GURNEY PATH OF TRAVEL IS MODELED ON GURNEY SIZE 84"LX24"W WITH 5" RADIUS CORNERS.

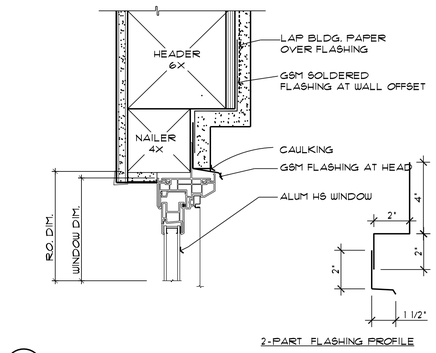

3 ALUM HS WDW HEAD
JAMB SIM.
3"=1'-0"

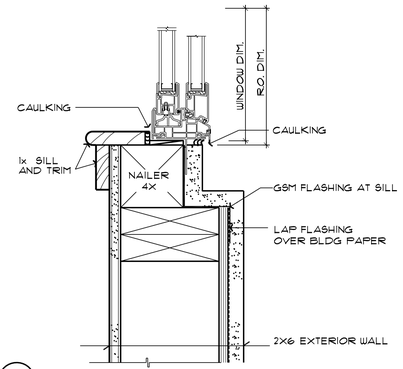

4 ALUM HS WDW SILL
3"=1'-0"

JOB No. 1412
DATE AUG 17, 2015

DESCRIPTION	DATE	REV.

PLANNING
ZHANG CONDOS
1316 SOUTH MAIN STREET
MILPITAS, CA

MBA ARCHITECTS
MARVIN BARBURG ASSOCIATES INC.
WWW.MBA-ARCHITECTS.NET
1176 LINCOLN AVENUE SAN JOSE CALIFORNIA 95125
PH 408/297-0288X13 FAX 408/297-0384

LICENSED ARCHITECT
Marvin Arthur Barburg
No. C-4649
REN. 09/15
STATE OF CALIFORNIA

ALL DRAWINGS AND WRITTEN MATERIAL APPEARING HEREIN ARE THE ORIGINAL AND UNPUBLISHED WORK OF THE ARCHITECT, AND MAY NOT BE COPIED OR USED WITHOUT THE WRITTEN CONSENT OF THE ARCHITECT.
COPYRIGHT © 2015
MBA ARCHITECTS

SHEET TITLE
DETAILS

SCALE
CAD FILE 1412-DD-G2.DWG
DRAWN BY AW

SHEET
A6
10 OF SHEETS

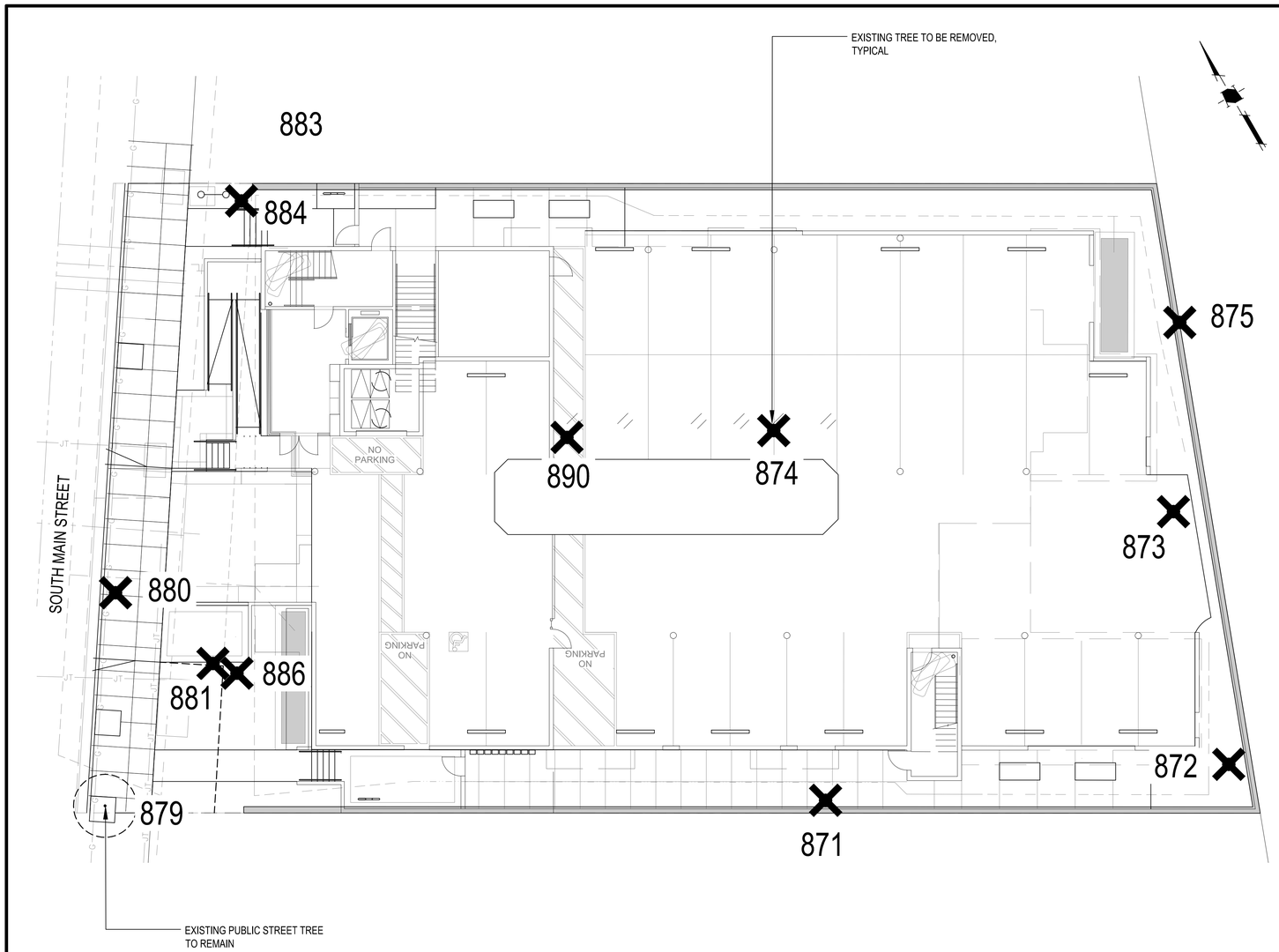

GRAPHIC SCALE

10 0 5 10 20 40

(In Feet)
1 inch = 10 feet

TREE PROTECTION LEGEND

DESCRIPTION	SYMBOL
TREE TO BE REMOVED	✕
TREE TO REMAIN/PROTECT	○

EXISTING TREE SUMMARY

TOTAL TREES TO REMAIN	1
TOTAL TREES TO BE RELOCATED	0
TOTAL TREES TO BE REMOVED/MITIGATED	+ 10
TOTAL EXISTING TREES ON SITE	11

NOTES

1. ALL TREES TO BE REMOVED SHALL HAVE THEIR STUMPS GROUND DOWN TO A MINIMUM DEPTH OF 24" REMOVE ALL LARGE ROOTS FROM PLANTING AREAS A MINIMUM DISTANCE OF 5' BEYOND THE DRIP LINE OF THE TREE.
2. SEE ARBORIST REPORT PREPARED BY HMH FOR EXISTING TREE INFORMATION.

TABLE 1 -TREE EVALUATION SUMMARY

Prepared By: Lisa Harris, ISA Certified Arborist #WE-9977A
DBH MEASUREMENT HEIGHT: 54"
Date of Evaluation: 4/1/15

Suitability for Preservation is based on the following:

Good - Trees with good health and structural stability that have the potential for longevity at the site.
Moderate - Trees in somewhat declining health and/or exhibits structural defects that cannot be abated with treatment. Trees will require more intense management and will have a shorter lifespan than those in the 'Good' category.
Poor - Trees in poor health or with significant structural defects that cannot be mitigated. Tree is expected to decline, regardless of treatment.

Health Rating

5	A healthy, vigorous tree, reasonably free of disease, with good structure and form typical of the species.
4	A tree with slight decline in vigor, small amount of twig dieback, minor structural defects that could be corrected.
3	A tree with moderate vigor, moderate twig and small branch dieback, thinning of crown, poor leaf color, moderate structural defects that may that might be mitigated with care.
2	A tree in decline, epicormic growth, extensive dieback of medium to large branches, significant structural defects that cannot be abated.
1	A tree in severe decline, dieback of scaffold branches and or trunk, mostly epicormic growth; extensive structural defects that cannot be abated.
0	Tree is dead.

Abbreviations and Definitions

CD	Codominant branches	Forked branches nearly the same size in diameter, arising from a common junction an lacking a normal branch union.
CDB	Dieback in Crown	Condition where branches in the tree crown die from the tips toward the center.
DBH	Diameter at Breast Height	Measurement of tree diameter in inches. Measurement height varies by City and is noted above.
FB	Fireblight	A disease in fruit trees resulting in burnt looking foliage.
H	Hazardous	A tree that in it's current condition, presents a hazard.
HD	Headed	Poor pruning practice of cutting back branches. Often practiced under utility lines to limit tree height.
IB	Included Bark	Structural defect where bark is included between the branch attachment so the wood can't join. Such defect can have a higher probability of
LN	Leaning Tree	Tree leaning, see notes for severity.
ML	Multiple Leaders	More than one upright primary stem
MS	Multi-stem	A tree having 2 or more trunks, either originating at grade or branching after DBH height measurement.
ND	Nitrogen Deficiency	Deficiency often resulting in lack of growth and yellow or pale green leaves.
S	Suckers	Shoot arising from the roots.
SC	Soil Compaction	Compaction of soil around tree root system which can damage vitality.
SD	Structural Defects	Naturally or secondary conditions including cavities, poor branch attachments, cracks, or decayed wood in any part of the tree that may contribute to structural failure.
SR	Surface Roots	Roots visible at finished grade.
SS	Sunscald	Injury to bark tissues on the trunk/branches caused by rapid temperature changes
WC	Weak Crotch	Weak union or fork in tree branching structure.
	Heritage tree	(e) All trees which have a thirty-seven-inch (37") or greater circumference of any trunk measured 4 1/2 feet from the ground and located on a vacant, undeveloped or underdeveloped property.

TAG #	BOTANICAL NAME	COMMON NAME	DBH	CIRCUMFERENCE	(CIRCUMFERENCE ≥ 37") HERITAGE TREE	NATIVE	HEALTH	PRESERVATION SUITABILITY	NOTES
871	Schinus molle	Peruvian Pepper	34.2	107	YES	NO	3	Poor	Leaf psyllid, exposed hardwood, locate close to newer wood fence
872	Albizia julibrissin	Persian Silk Tree	21.4	67	YES	NO	1	Poor	MS 7.4+6.2+7.8
873	Schinus molle	Peruvian Pepper	50.8	160	YES	NO	3	Moderate	MS 21.3+29.5, branch DB
874	Schinus molle	Peruvian Pepper	58.5	184	YES	NO	3	Poor	MS 10.6+20.2+28.3, large limbs broken and suspended in lower branches
875	Schinus molle	Peruvian Pepper	7.0	22		NO	4	Poor	on east side of wood fence, volunteer
879	Ulmus x frontier	Frontier Elm	3.2	10		NO	5	Good	public street tree, straddles property line
880	Ulmus x frontier	Frontier Elm	2.3	7		NO	5	Poor	public street tree, located at proposed driveway, consider relocation
881	Cedrus deodara	Deodar Cedar	11.5	36		NO	3	Moderate	
883	Ligustrum lucidum	Privet	14.6	46	YES	NO	4	Good	on adjacent parcel, use protective measures if removing tree 884
884	Schinus molle	Peruvian Pepper	24.8	78	YES	NO	4	Poor	DB mid branch
886	Cedrus deodara	Deodar Cedar	14.5	46	YES	NO	3	Moderate	slight LN
890	Schinus molle	Peruvian Pepper	33.0	104	YES	NO	1	Poor	large galls oozing white substance, roots constricted by fence large upper branch pruned

HMH
Land Use Entitlements
Land Planning
Landscape Architecture
Civil Engineering
Utility Design
Land Surveying
Stormwater Compliance
1570 Oakland Road (408) 487-2200
San Jose, CA 95131 HMHca.com

LICENSED LANDSCAPE ARCHITECT
WILLIAM SERNA
NO. 4466
Signature
5/26/17
Renewal Date
Date
STATE OF CALIFORNIA

GEORGE ZHANG
641 TERESI LANE
LOS ALTOS, CA 94024
(530) 340-9961

SITE DEVELOPMENT PERMIT
P-SD14-0021
ZHANG CONDOMINIUMS
1316 SOUTH MAIN STREET, MILPITAS, CA

NO	DATE	DESCRIPTION
4		
3	5/02/2016	PER CITY COMMENTS
2	1/29/2016	PER CITY COMMENTS
1	8/14/2015	PER CITY COMMENTS
0	4/09/2015	PER CITY COMMENTS

PROJECT NO:	4480.00
CAD DWG FILE:	448000CL.DWG
DESIGNED BY:	CC
DRAWN BY:	CC
CHECKED BY:	ZEF
DATE:	OCTOBER 13, 2014
SCALE:	1" = 10'

© HMH

TREE REMOVAL PLAN

1.00

S:\PROJECTS\448000\LA\PLANNING\448000CL.DWG

PLOTTED: 6/29/2016 8:59 AM

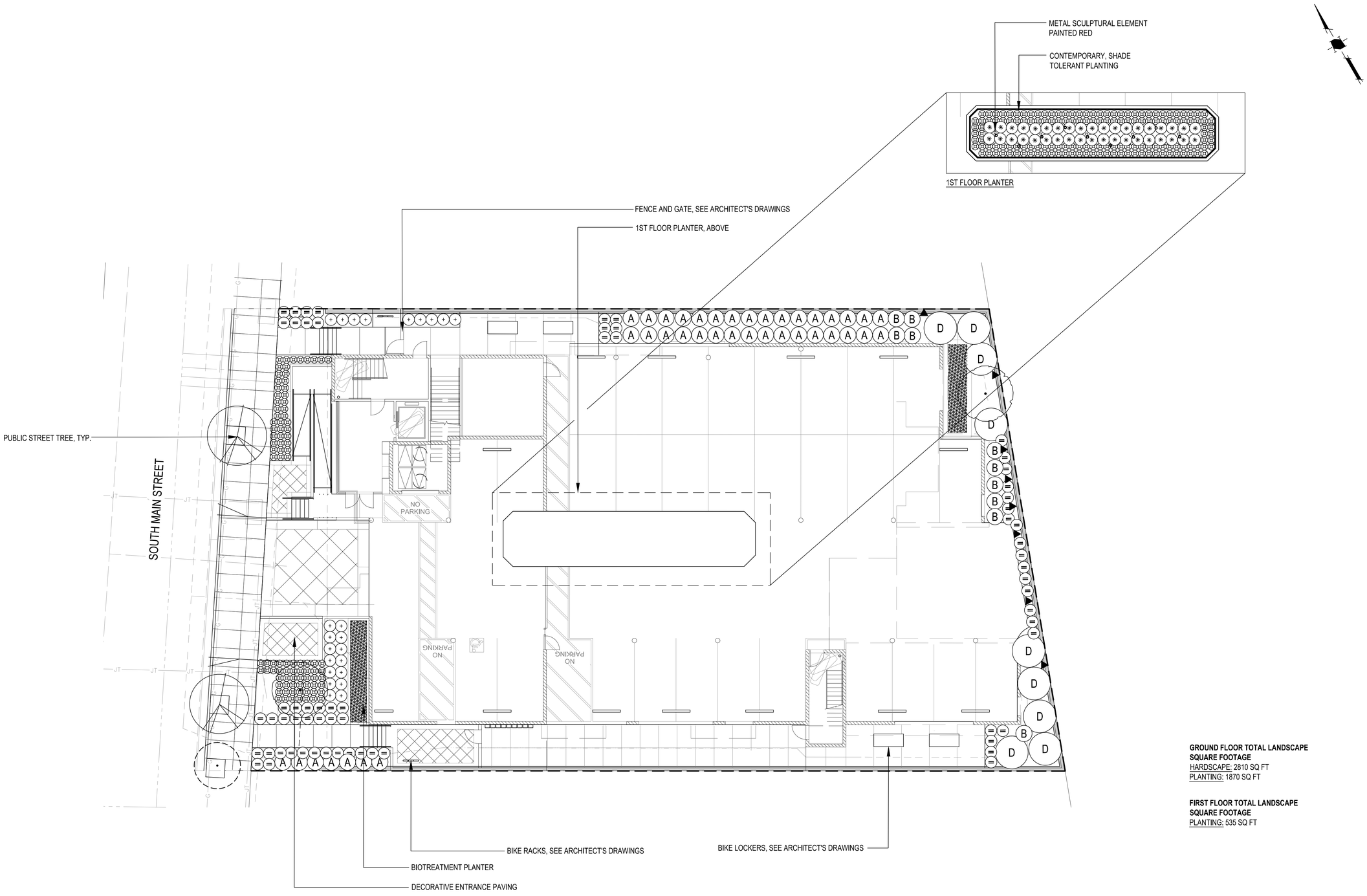

GROUND FLOOR TOTAL LANDSCAPE SQUARE FOOTAGE
HARDSCAPE: 2810 SQ FT
PLANTING: 1870 SQ FT

FIRST FLOOR TOTAL LANDSCAPE SQUARE FOOTAGE
PLANTING: 535 SQ FT

GRAPHIC SCALE
10 0 5 10 20 40
(In Feet)
1 inch = 10 feet

NOTES:
1. SEE SHEET 1.03 FOR PLANTING LEGEND AND NOTES.
2. SEE SHEET 1.04 FOR PLANTING DETAILS.

HMH
Land Use Entitlements
Land Planning
Landscape Architecture
Civil Engineering
Utility Design
Land Surveying
Stormwater Compliance
1570 Oakland Road
San Jose, CA 95131
(408) 487-2200
HMHca.com

LICENSED LANDSCAPE ARCHITECT
WILLIAM SERNA
NO. 4466
Signature
3/28/17
Renewal Date
Date
STATE OF CALIFORNIA

GEORGE ZHANG
641 TERESI LANE
LOS ALTOS, CA 94024
(530) 340-9961

SITE DEVELOPMENT PERMIT
P-SD14-0021
ZHANG CONDOMINIUMS
1316 SOUTH MAIN STREET, MILPITAS, CA

NO	DATE	DESCRIPTION
4	5/02/2016	PER CITY COMMENTS
3	1/29/2016	PER CITY COMMENTS
2	8/14/2015	PER CITY COMMENTS
1	4/09/2015	PER CITY COMMENTS

PROJECT NO:	4480.00
CAD DWG FILE:	448000CL.DWG
DESIGNED BY:	CC
DRAWN BY:	CC
CHECKED BY:	RTH
DATE:	OCTOBER 13, 2014
SCALE:	1" = 10'

© HMH

LANDSCAPE PLAN - GROUND AND FIRST FLOOR

1.01

S:\PROJECTS\448000\LA\PLANNING\448000CL.DWG

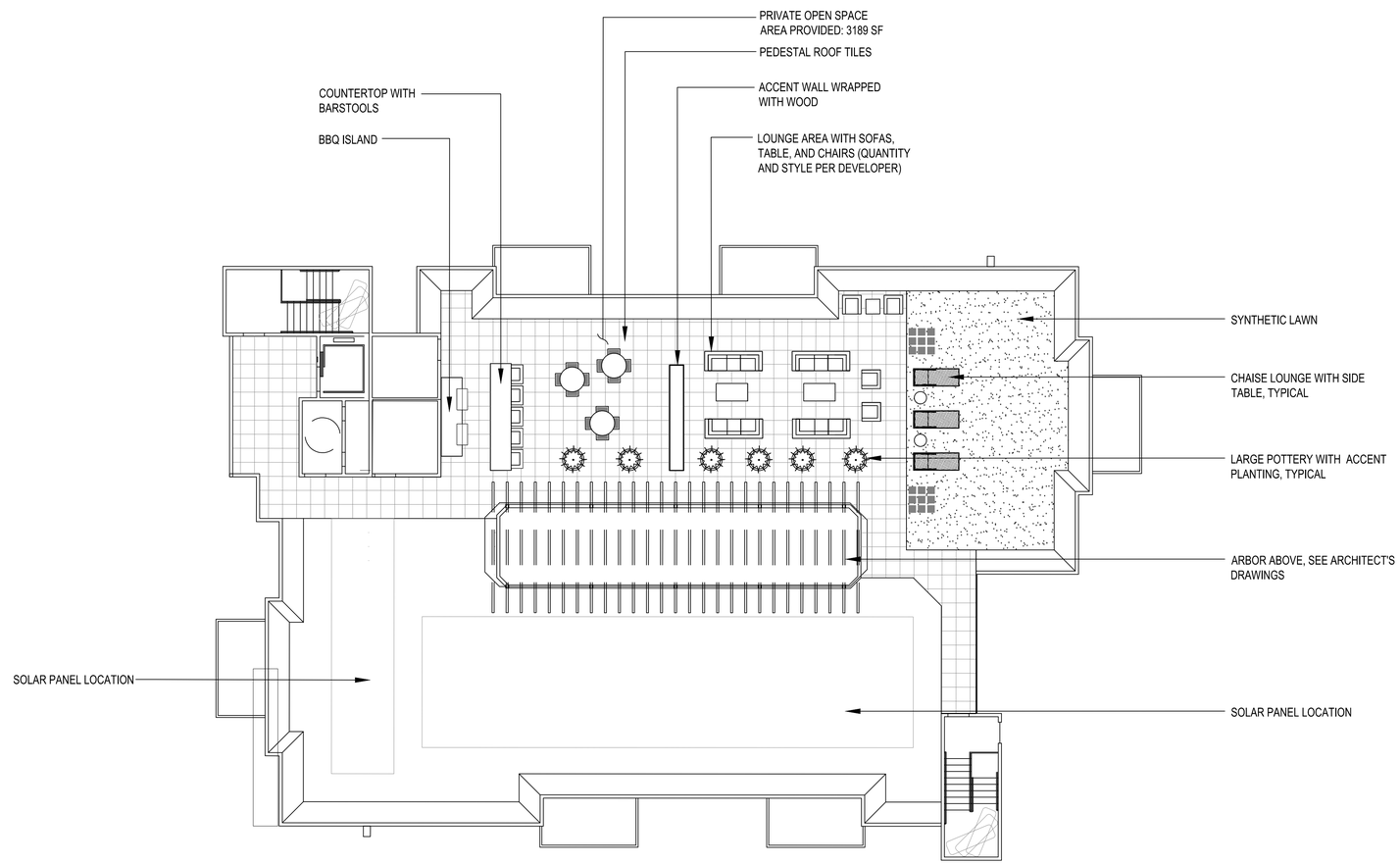

ROOF TOTAL LANDSCAPE SQUARE FOOTAGE
HARDSCAPE: 3,210 SQ FT
PLANTING: 42 SQ FT

GRAPHIC SCALE
10 0 5 10 20 40
(In Feet)
1 inch = 10 feet

NOTES:
1. SEE SHEET 1.03 FOR PLANTING LEGEND AND NOTES.
2. SEE SHEET 1.04 FOR PLANTING DETAILS.

HMH
Land Use Entitlements
Land Planning
Landscape Architecture
Civil Engineering
Utility Design
Land Surveying
Stormwater Compliance
1570 Oakland Road
San Jose, CA 95131
(408) 487-2200
HMHca.com

LICENSED LANDSCAPE ARCHITECT
WILLIAM SERNA
NO. 4466
Signature
3/28/17
Renewal Date
Date
STATE OF CALIFORNIA

GEORGE ZHANG
641 TERESI LANE
LOS ALTOS, CA 94024
(530) 340-9961

SITE DEVELOPMENT PERMIT
P-SD14-0021
ZHANG CONDOMINIUMS
1316 SOUTH MAIN STREET, MILPITAS, CA

NO	DATE	DESCRIPTION
3	5/02/2016	PER CITY COMMENTS
2	1/29/2016	PER CITY COMMENTS
1	8/14/2015	PER CITY COMMENTS
0	4/09/2015	PER CITY COMMENTS

PROJECT NO:	4480.00
CAD DWG FILE:	448000CL.DWG
DESIGNED BY:	CC
DRAWN BY:	CC
CHECKED BY:	RTH
DATE:	OCTOBER 13, 2014
SCALE:	1" = 10'

© HMH

LANDSCAPE PLAN - ROOF

1.02

S:\PROJECTS\448000\PLANNING\448000CL.DWG

PLANTING PLAN NOTES

CONTRACTOR SHALL PROVIDE ALL LABOR, MATERIALS, AND EQUIPMENT NECESSARY TO FURNISH AND INSTALL PLANT MATERIAL AS SHOWN ON THE DRAWINGS AND AS DESCRIBED IN THE SPECIFICATIONS.

UNLESS DESIGNATED ON THE DRAWINGS OTHERWISE, STRUCTURAL IMPROVEMENTS AND HARDSCAPE SHALL BE INSTALLED PRIOR TO PLANTING OPERATIONS.

PLANT LIST ON THE DRAWINGS SHALL BE USED AS A GUIDE ONLY. CONTRACTOR SHALL TAKEOFF AND VERIFY SIZES AND QUANTITIES BY PLAN CHECK.

A SOIL MANAGEMENT REPORT SHALL BE PROVIDED BY LANDSCAPE CONTRACTOR AND SOIL AMENDMENTS SHALL BE FOLLOWED PER THE REPORT. PHYSICAL COPIES OF THE SOIL MANAGEMENT REPORT SHALL BE PROVIDED TO THE CLIENT, PROJECT LANDSCAPE ARCHITECT AND LOCAL AGENCY AS REQUIRED. THE SOIL MANAGEMENT REPORT SHALL CONFORM TO STATE AB1881 WATER EFFICIENT LANDSCAPE ORDINANCE (WELO) OR LOCAL AGENCY ADOPTED WELO. CONTRACTOR SHALL OBTAIN A SOILS MANAGEMENT REPORT AFTER GRADING OPERATIONS AND PRIOR TO PLANT INSTALLATION.

SAMPLES OF FERTILIZERS, ORGANIC AMENDMENT, SOIL CONDITIONERS, AND SEED SHALL BE SUBMITTED PRIOR TO INCORPORATION. CONTRACTOR SHALL FURNISH TO THE OWNER'S AUTHORIZED REPRESENTATIVE A CERTIFICATE OF COMPLIANCE FOR SUCH FURNISHED MATERIALS.

ALL WORK ON THE IRRIGATION SYSTEM, INCLUDING HYDROSTATIC, COVERAGE, AND OPERATIONAL TESTS AND THE BACKFILLING AND COMPACTION OF TRENCHES SHALL BE PERFORMED PRIOR TO PLANTING OPERATIONS.

LOCATIONS OF PLANT MATERIAL SHALL BE REVIEWED ON SITE BY THE OWNER'S AUTHORIZED REPRESENTATIVE PRIOR TO INSTALLATION.

TREES SHALL BE PLANTED NO CLOSER THAN TEN FEET (10') FROM UTILITIES.

TREES PLANTED WITHIN FIVE FEET (5') OF HARDSCAPE OR STRUCTURES SHALL BE INSTALLED WITH A ROOT BARRIER AS APPROVED BY THE OWNER'S AUTHORIZED REPRESENTATIVE.

CONTRACTOR TO CONTACT CITY OF MILPITAS TO LOCATE STREET TREES PRIOR TO PLANTING. IF STREET TREES ARE TO BE PLANTED IN TREE WELLS, FINAL LOCATION OF TREE WELLS SHALL BE DETERMINED BY THE ARBORIST PRIOR TO INSTALLATION OF SIDEWALK. IF SPECIES OF STREET TREE IS SHOWN ON THE PLANTING LEGEND, THE SPECIES HAS BEEN COORDINATED WITH THE CITY ARBORIST. ANY CHANGE TO THE SPECIES OF STREET TREE MUST BE APPROVED BY THE CITY ARBORIST.

ALL PLANTING AREAS TO RECEIVE 3" THICK BARK MULCH LAYER. IN THE EVENT THAT BARK MULCH EXISTS ON SITE, CONTRACTOR SHALL PROVIDE SAMPLE OF EXISTING AND PROPOSED MATCHING BARK MULCH FOR APPROVAL. OTHERWISE, BARK MULCH SHALL BE LYNGSO SMALL FIR BARK (3/4" TO 1-1/2") OR APPROVED EQUAL.

ALL PLANT MATERIAL SHALL BE SELECTED IN ACCORDANCE WITH THE AMERICAN STANDARD FOR NURSERY STOCK (ANSI Z60.1)
FOR STANDARD FORM TREES, CALIPER SIZE SHALL BE MEASURED 6" ABOVE THE SOIL LINE FOR CALIPERS EQUAL TO OR LESS THAN 4" FOR CALIPERS GREATER THAN 4", CALIPER SHALL BE MEASURES 12" ABOVE THE SOIL LINE. FOR MULTI-TRUNK TREES THE CALIPER SHALL BE ESTABLISHED BY TAKING THE AVERAGE OF THE CALIPER OF THE TWO LARGEST TRUNKS.
CALIPER IS MEASURED 6" ABOVE ORIGINATION POINT OF THE SECOND LARGEST TRUNK OR 6" ABOVE GROUND IF ALL TRUNKS ORIGINATE FROM THE SOIL.

CALIPER SIZES STANDARDS:
15 GALLON: 0.75-1.25"
24" BOX: 1.25-2"
36" BOX: 2-3.5"
48" BOX: 3.5-5"
60" BOX: 4-6"

WATER NEEDS CATEGORY BASED ON WUCOLS IV (JANUARY 2014) LANDSCAPE COEFFICIENT METHOD:

CATEGORY	*PERCENTAGE OF ETo*
(H) HIGH:	0.7-0.9
(M) MEDIUM:	0.4-0.6
(L) LOW:	0.1-0.3
(VL) VERY LOW:	<0.1

PLANT LEGEND

SYMBOL	BOTANICAL NAME	COMMON NAME	MINIMUM CONTAINER SIZE	HxW	WUCOLS
TREES					
	ARBUTUS 'MARINA'	MARINA STRAWBERRY TREE	24" BOX MULT-STEM	15'X15'	L
	STREET TREEE (TO MATCH EXISTING ULMUS X FRONTIER) - TO BE PLANTED PER CITY OF MILPITAS STANDARD DETAIL		36" BOX	-	
SHRUBS AND GRASSES					
	NEPHROLEPIS CORDIFOLIA	SWORD FERN	1 GALLON	2'-3'	M
	ANIGOZANTHOS 'BUSH PIZAZZ' / 'BIG RED'	MIX EQUAL 'BUSH PIZZAZ' & 'BIG RED'	1 GALLON	1'X2'	L
	CALAMAGROSTIS ACUTIFLORA' KARL FOERSTER'	FOERSTER'S FEATHER GRASS	5 GALLON	2'X2'	L
B	CHONDROPETALUM TECTORUM 'EL CAMPO'	SMALL CAPE RUSH	1 GALLON	2'X3'	L
	DIANELLA 'CASA BLUE'	BLUE FLAX LILY	1 GALLON	1'X2'	L
D	DODONAEA VISCOSA 'PURPUREA'	PURPLE LEAFED HOP BUSH	1 GALLON	12'X6'	L
	LOMANDRA BREEZE	MAT RUSH	1 GALLON	3'X2'	L
A	MUHLENBERGIA RIGENS	DEER GRASS	1 GALLON	4'X4'	L
VINES					
▼	SOLANUM JASMINOIDES	POTATO VINE	1 GALLON	SECURE TO WALL OR FENCE	M
BIOTREATMENT PLANTING					
	JUNCUS PATENS 'ELKS BLUE'	GRAY RUSH	1 GALLON	18"X18"	M
SYNTHETIC ROOF					
	TO BE SYNFESCUE 354 BY SYNLAWN - MULTI-COLORED 'OMEGA' SHAPED GRASS BLADES WITH HEATBLOCK™ TECHNOLOGY AND ENVIROLOC™ BACKING TECHNOLOGY FOR A LUSH, NATURAL APPEARANCE THAT OFFERS SUPERIOR DIMENSIONAL STABILITY, OUTSTANDING DURABILITY AND LOW SURFACE TEMPERATURES. SKU: SF354. HTTP://WWW.SYNLAWN.COM				

HMH
Land Use Entitlements
Land Planning
Landscape Architecture
Civil Engineering
Utility Design
Land Surveying
Stormwater Compliance
1570 Oakland Road (408) 487-2200
San Jose, CA 95131 HMHca.com

LICENSED LANDSCAPE ARCHITECT
WILLIAM SERNA
NO. 4466
Signature
3/28/17
Renewal Date
Date
STATE OF CALIFORNIA

GEORGE ZHANG
641 TERESI LANE
LOS ALTOS, CA 94024
(530) 340-9961

SITE DEVELOPMENT PERMIT
P-SD14-0021
ZHANG CONDOMINIUMS
1316 SOUTH MAIN STREET, MILPITAS, CA

NO	DATE	DESCRIPTION
3	5/02/2016	PER CITY COMMENTS
2	1/29/2016	PER CITY COMMENTS
1	8/14/2015	PER CITY COMMENTS
0	4/09/2015	PER CITY COMMENTS

PROJECT NO:	4480.00
CAD DWG FILE:	448000CL.DWG
DESIGNED BY:	CC
DRAWN BY:	CC
CHECKED BY:	RTH
DATE:	OCTOBER 13, 2014
SCALE:	AS SHOWN

© HMH

PLANTING LEGEND AND NOTES

1.03

S:\PROJECTS\4480\00\LA\PLANNING\448000CL.DWG

NOTES:
1. SEE PLANTING SPECIFCATIONS PRIOR TO INSTALLATION OF PLANT MATERIALS.

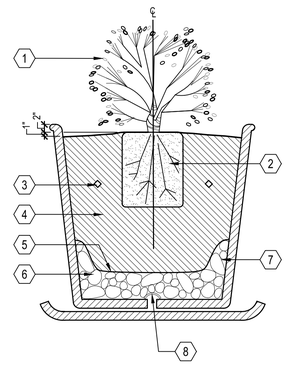

1. SHRUB-SEE PLAN AND LEGEND FOR SIZE AND TYPE
2. ROOTBALL
3. AGRIFORM PLANT TABLETS 2 PER 1 GALLON, 3 PER 5 AND 15 GALLON
4. BACKFILL MIX: 50% ORGANIC AMENDMENTS 50% WASHED HORTICULTURAL SAND
5. SARAN CLOTH 92% SHADE
6. PEA GRAVEL 2" MINIMUM DEPTH
7. POTTERY WITH MATCHING SAUCER-SEE POTTERY PLAN FOR TYPE
8. DRAIN CHIP

C CONTAINER PLANTING (SHRUB)
SCALE: N.T.S.

NOTES:
1. ALL PLANTS TO BE PLANTED AT EQUAL SPACING "TRIANGULATED" UNLESS OTHERWISE INDICATED ON PLANS.
2. INFILL PLANTS AS REQUIRED TO MAINTAIN SPACING AT IRREGULAR EDGES.

1. EDGE OF PLANTING AREA
2. TYPICAL PLANT SPACING VARIES SEE PLANTING LEGEND AND PLANS.

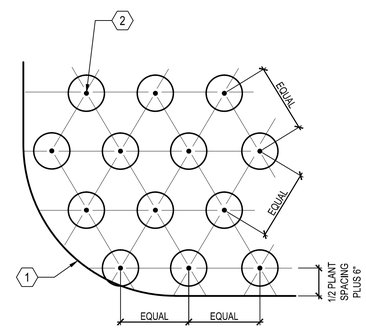

D GROUNDCOVER SPACING
SCALE: N.T.S.

NOTES:
1. SEE PLANTING SPECIFICATIONS PRIOR TO INSTALLATION OF PLANT MATERIALS.
2. ROOTBALL CROWN TO BE 1" ABOVE FINISH GRADE.

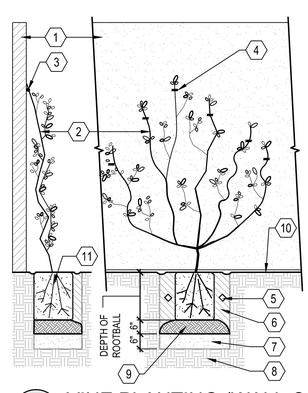

1. FENCE OR WALL
2. VINE-SEE PLANTING PLAN FOR SIZE AND TYPE
3. VINE TYING DISCS-EPOXY TO WALL TO SUPPORT PLANT BRANCHING STRUCTURE
4. PLASTIC STAKING TAPE TO TIE BRANCHES TO TYING DISCS
5. AGRIFORM PLANT TABLETS 2 PER 1 GALLON, 3 PER 5 AND 15 GALLON
6. APPROVED BACKFILL, THOROUGHLY MIXED PRIOR TO INSTALLATION
7. SCARIFY SOIL TO 6" DEPTH AND ADD EQUAL AMOUNT OF PREPARED SOIL AND THOROUGHLY MIX
8. NATIVE GRADE
9. FOOT TAMP BASE
10. FINISH GRADE
11. ROOTBALL

E VINE PLANTING (WALL OR FENCE)
SCALE: 1"=1'-0"

NOTES:
1. SEE PLANTING SPECIFCATIONS PRIOR TO INSTALLATION OF PLANT MATERIALS.
2. THIS DETAIL APPLIES TO 15 GALLON AND 24" BOX TREES.
3. ROOTBALL CROWN TO EXTEND 1" ABOVE FINISH GRADE.
4. TREES INSTALLED WITHIN TURF AREAS SHALL BE INSTALLED WITH 'ARBOR-GARD' AT BASE OF TRUNK.

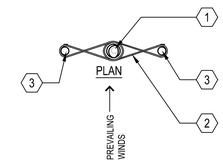

1. TREE-SEE PLAN FOR SIZE AND TYPE
2. CINCH TIE OR APPROVED EQUAL
3. 2" DIAMETER TREATED LODGE POLE PINE STAKE PLACED ON WINDWARD SIDES OF TREE, AND OUTSIDE OF ROOTBALL
4. A SHALLOW BASIN 2" DEEP SHALL BE FORMED AROUND ROOTBALL BELOW FINISH GRADE. TREES PLANTED IN TURF SHALL NOT HAVE BASINS.
5. FINISH GRADE
6. ROOTBALL
7. AGRIFORM PLANT TABLETS 3 PER 15 GALLON, 6 PER 24" BOX AND 8 FOR 36" BOX
8. APPROVED BACKFILL, THOROUGHLY MIXED PRIOR TO INSTALLATION. PUDDLE AND SETTLE PRIOR TO PLANTING TREE.
9. FOOT TAMP BASE
10. NATIVE GRADE

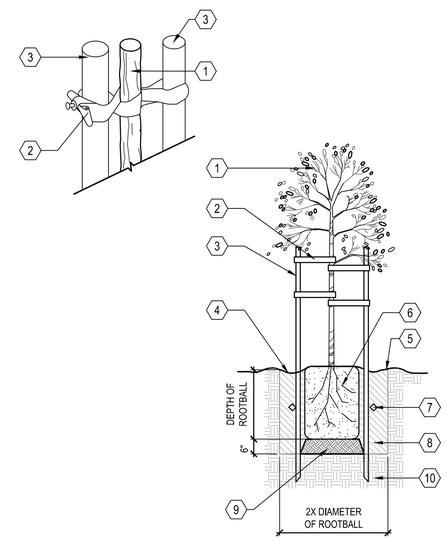

A TREE STAKING (DOUBLE)
SCALE: N.T.S.

NOTES:
1. SEE PLANTING SPECIFCATIONS PRIOR TO INSTALLATION OF PLANT MATERIALS.
2. ROOTBALL CROWN TO BE 1" ABOVE FINISH GRADE.

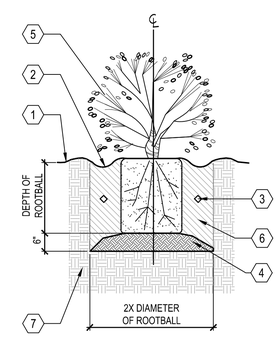

1. FINISH GRADE
2. A SHALLOW BASIN 2" DEEP SHALL BE FORMED AROUND ROOTBALL BELOW FINISH GRADE
3. AGRIFORM PLANT TABLETS 2 PER 1 GALLON, 3 PER 5 AND 15 GALLON
4. FOOT TAMP BASE
5. SHRUB-SEE PLAN AND LEGEND FOR SIZE AND TYPE
6. APPROVED BACKFILL, THOROUGHLY MIXED PRIOR TO INSTALLATION
7. NATIVE GRADE OR CERTIFIED COMPACTED SUBGRADE

B SHRUB PLANTING
SCALE: N.T.S.

HMH
Land Use Entitlements
Land Planning
Landscape Architecture
Civil Engineering
Utility Design
Land Surveying
Stormwater Compliance
1570 Oakland Road San Jose, CA 95131
(408) 487-2200 HMHca.com

LICENSED LANDSCAPE ARCHITECT WILLIAM SERNA NO. 4466 Signature 3/28/17 Renewal Date Date STATE OF CALIFORNIA

GEORGE ZHANG
641 TERESI LANE
LOS ALTOS, CA 94024
(530) 340-9961

SITE DEVELOPMENT PERMIT
P-SD14-0021
ZHANG CONDOMINIUMS
1316 SOUTH MAIN STREET, MILPITAS, CA

NO	DATE	DESCRIPTION
4	5/02/2016	PER CITY COMMENTS
3	1/29/2016	PER CITY COMMENTS
2	8/14/2015	PER CITY COMMENTS
1	4/09/2015	PER CITY COMMENTS

PROJECT NO:	4480.00
CAD DWG FILE:	448000CL.DWG
DESIGNED BY:	CC
DRAWN BY:	CC
CHECKED BY:	RTH
DATE:	OCTOBER 13, 2014
SCALE:	AS SHOWN

© HMH

PLANTING DETAILS

1.04

S:\PROJECTS\448000\LA\PLANNING\448000CL.DWG

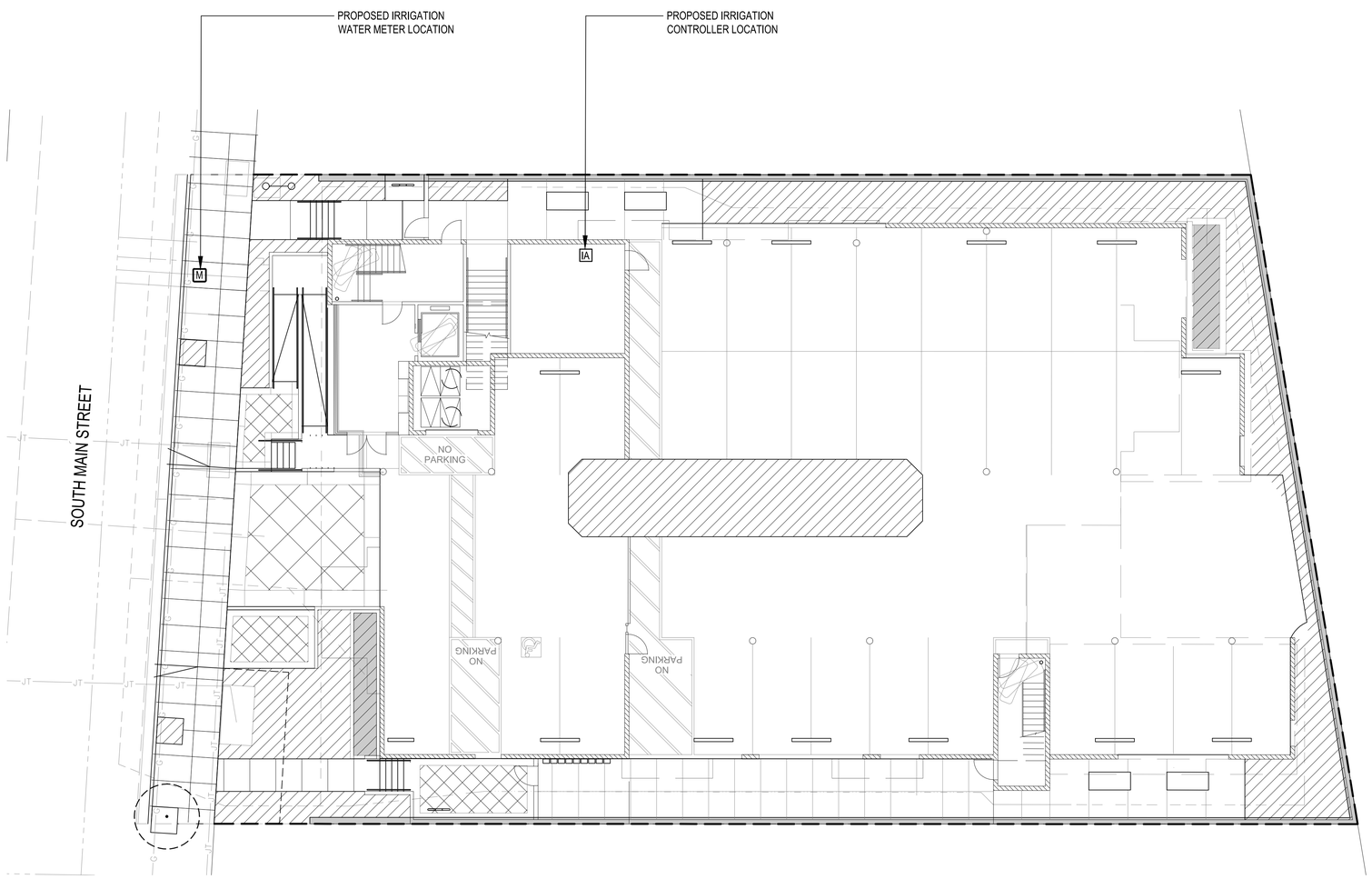

IRRIGATION ZONE LEGEND:

DRIP ALL PLANTING AREAS, INCLUDING POTS AND TREE BUBBLERS AT TREES.

IRRIGATION DESIGN CRITERIA:

1. FINAL DESIGN SHALL CONFORM TO AB1881 OR CITY ADOPTED WATER EFFICIENT LANDSCAPE ORDINANCE.
2. ALL PLANTING AREAS SHOWN WILL BE COMMONLY MAINTAINED BY THE OWNER AND IRRIGATED BY AN AUTOMATIC IRRIGATION SYSTEM.
3. IRRIGATION SYSTEMS WILL BE PERMANENT BELOW GROUND AUTOMATED SYSTEMS ADEQUATE FOR THE ESTABLISHMENT AND MAINTENANCE OF ALL PLANT MATERIAL. THESE SYSTEMS WILL BE INSTALLED AS SOON AS PRACTICAL AFTER GRADING AND PRIOR TO PLANT MATERIAL INSTALLATION AND HYDROSEEDING.
4. ALL TURF, TREE, SHRUB AND GROUNDCOVER AREAS WILL BE IRRIGATED BY A PERMANENT, AUTOMATIC, UNDERGROUND IRRIGATION SYSTEM. ALL SPRAY AREAS WILL BE IRRIGATED BY HIGH EFFICIENCY MATCHED PRECIPITATION RATE POP-UP SPRAY HEADS. TURF, TREE, SHRUB, AND GROUND COVER AREAS SHALL BE ON SEPARATE VALVES ACCORDING TO PLANT WATER REQUIREMENTS AND EXPOSURE.
5. ALL IRRIGATION SYSTEMS SHALL BE DESIGNED, MAINTAINED AND MANAGED TO MEET OR EXCEED MINIMUM EFFICIENCY.
6. ALL IRRIGATION EQUIPMENT SHALL BE SCREENED APPROPRIATELY FROM VIEW IN PUBLIC AREAS TO THE MAXIMUM EXTENT POSSIBLE.
7. THE FINAL IRRIGATION PLAN SHALL ACCURATELY AND CLEARLY IDENTIFY:
   A. LOCATIONS AND SIZES OF WATER POINTS OF CONNECTION.
   B. LOCATION, TYPE AND SIZE OF ALL COMPONENTS OF THE IRRIGATION SYSTEM, INCLUDING AUTOMATIC CONTROLLERS, MAIN AND LATERAL LINES, VALVES, SPRINKLER HEADS, RAIN SWITCHES, AND QUICK COUPLERS.
   C. STATIC WATER PRESSURE AT THE POINTS OF CONNECTION.
   D. FLOW RATE (GALLONS PER MINUTE), REMOTE CONTROL VALVE SIZE, AND DESIGN OPERATING PRESSURE (PSI) FOR EACH STATION.
   E. HYDROZONE INFORMATION TABLE.
   F. WATER USE CALCULATIONS.
8. A NEW IRRIGATION WATER METER TO BE INSTALLED AS PART OF LANDSCAPE IMPROVEMENTS, SIZE TO BE DETERMINED.

SBWR RECLAIMED WATER NOTES:

1. THIS PROJECT IS NOT A PART OF THE SOUTH BAY WATER RECYCLING PROGRAM. POTABLE WATER WILL BE USED FOR IRRIGATION.

GRAPHIC SCALE

10 0 5 10 20 40

(In Feet)
1 inch = 10 feet

HMH
Land Use Entitlements
Land Planning
Landscape Architecture
Civil Engineering
Utility Design
Land Surveying
Stormwater Compliance
1570 Oakland Road
San Jose, CA 95131
(408) 487-2200
HMHca.com

LICENSED LANDSCAPE ARCHITECT
WILLIAM SERNA
NO. 4466
Signature
3/28/17
Renewal Date
Date
STATE OF CALIFORNIA

GEORGE ZHANG
641 TERESI LANE
LOS ALTOS, CA 94024
(530) 340-9961

SITE DEVELOPMENT PERMIT
P-SD14-0021
ZHANG CONDOMINIUMS
1316 SOUTH MAIN STREET, MILPITAS, CA

NO	DATE	DESCRIPTION
4		
3	5/02/2016	PER CITY COMMENTS
2	1/29/2016	PER CITY COMMENTS
1	8/14/2015	PER CITY COMMENTS
0	4/09/2015	PER CITY COMMENTS

PROJECT NO:	4480.00
CAD DWG FILE:	448000CL.DWG
DESIGNED BY:	CC
DRAWN BY:	CC
CHECKED BY:	RTH
DATE:	OCTOBER 13, 2014
SCALE:	1" = 10'

© HMH

HYDROZONE PLAN - GROUND AND FIRST FLOOR

1.05

S:\PROJECTS\448000\LA\PLANNING\448000CL.DWG

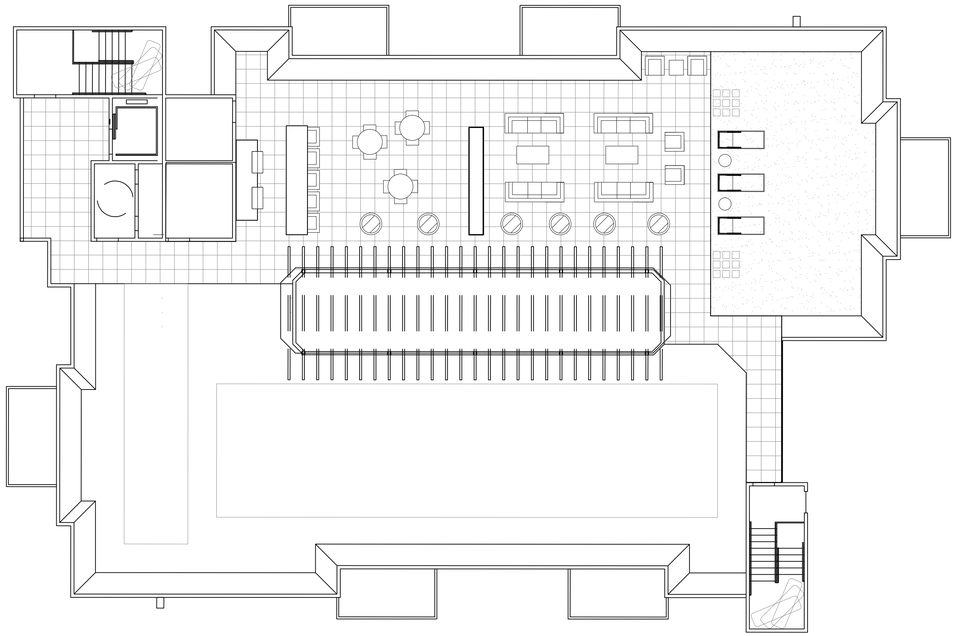

IRRIGATION ZONE LEGEND:

DRIP ALL PLANTING AREAS, INCLUDING POTS AND TREE BUBBLERS AT TREES.

IRRIGATION DESIGN CRITERIA:

1. FINAL DESIGN SHALL CONFORM TO AB1881 OR CITY ADOPTED WATER EFFICIENT LANDSCAPE ORDINANCE.
2. ALL PLANTING AREAS SHOWN WILL BE COMMONLY MAINTAINED BY THE OWNER AND IRRIGATED BY AN AUTOMATIC IRRIGATION SYSTEM.
3. IRRIGATION SYSTEMS WILL BE PERMANENT BELOW GROUND AUTOMATED SYSTEMS ADEQUATE FOR THE ESTABLISHMENT AND MAINTENANCE OF ALL PLANT MATERIAL. THESE SYSTEMS WILL BE INSTALLED AS SOON AS PRACTICAL AFTER GRADING AND PRIOR TO PLANT MATERIAL INSTALLATION AND HYDROSEEDING.
4. ALL TURF, TREE, SHRUB AND GROUNDCOVER AREAS WILL BE IRRIGATED BY A PERMANENT, AUTOMATIC, UNDERGROUND IRRIGATION SYSTEM. ALL SPRAY AREAS WILL BE IRRIGATED BY HIGH EFFICIENCY MATCHED PRECIPITATION RATE POP-UP SPRAY HEADS. TURF, TREE, SHRUB, AND GROUND COVER AREAS SHALL BE ON SEPARATE VALVES ACCORDING TO PLANT WATER REQUIREMENTS AND EXPOSURE.
5. ALL IRRIGATION SYSTEMS SHALL BE DESIGNED, MAINTAINED AND MANAGED TO MEET OR EXCEED MINIMUM EFFICIENCY.
6. ALL IRRIGATION EQUIPMENT SHALL BE SCREENED APPROPRIATELY FROM VIEW IN PUBLIC AREAS TO THE MAXIMUM EXTENT POSSIBLE.
7. THE FINAL IRRIGATION PLAN SHALL ACCURATELY AND CLEARLY IDENTIFY:
   A. LOCATIONS AND SIZES OF WATER POINTS OF CONNECTION.
   B. LOCATION, TYPE AND SIZE OF ALL COMPONENTS OF THE IRRIGATION SYSTEM, INCLUDING AUTOMATIC CONTROLLERS, MAIN AND LATERAL LINES, VALVES, SPRINKLER HEADS, RAIN SWITCHES, AND QUICK COUPLERS.
   C. STATIC WATER PRESSURE AT THE POINTS OF CONNECTION.
   D. FLOW RATE (GALLONS PER MINUTE), REMOTE CONTROL VALVE SIZE, AND DESIGN OPERATING PRESSURE (PSI) FOR EACH STATION.
   E. HYDROZONE INFORMATION TABLE.
   F. WATER USE CALCULATIONS.
8. A NEW IRRIGATION WATER METER TO BE INSTALLED AS PART OF LANDSCAPE IMPROVEMENTS, SIZE TO BE DETERMINED.

SBWR RECLAIMED WATER NOTES:

1. THIS PROJECT IS NOT A PART OF THE SOUTH BAY WATER RECYCLING PROGRAM. POTABLE WATER WILL BE USED FOR IRRIGATION.

GRAPHIC SCALE

10 0 5 10 20 40

(In Feet)
1 inch = 10 feet

HMH
Land Use Entitlements
Land Planning
Landscape Architecture
Civil Engineering
Utility Design
Land Surveying
Stormwater Compliance
1570 Oakland Road
San Jose, CA 95131
(408) 487-2200
HMHca.com

LICENSED LANDSCAPE ARCHITECT
WILLIAM SERNA
NO. 4466
Signature
3/28/17
Renewal Date
Date
STATE OF CALIFORNIA

GEORGE ZHANG
641 TERESI LANE
LOS ALTOS, CA 94024
(530) 340-9961

SITE DEVELOPMENT PERMIT
P-SD14-0021
ZHANG CONDOMINIUMS
1316 SOUTH MAIN STREET, MILPITAS, CA

NO	DATE	DESCRIPTION
3	5/02/2016	PER CITY COMMENTS
2	1/29/2016	PER CITY COMMENTS
1	8/14/2015	PER CITY COMMENTS
1	4/09/2015	PER CITY COMMENTS

PROJECT NO:	4480.00
CAD DWG FILE:	448000CL.DWG
DESIGNED BY:	CC
DRAWN BY:	CC
CHECKED BY:	RTH
DATE:	OCTOBER 13, 2014
SCALE:	1" = 10'

© HMH

HYDROZONE PLAN - ROOF

1.06

S:\PROJECTS\448000\LA\PLANNING\448000CL.DWG

1. 4"Ø OPEN GRATE CAP FOR PERFORATED DRAIN PIPE NOT TO SCALE - TYP.
2. SMOOTH PLASTIC DRAIN PIPE CAP OPEN GRATE TYPE - TYP.
3. BUBBLER HEAD (SEE IRRIGATION LEGEND FOR BUBBLER MAKE & MODEL)
4. FINISHED GRADE
5. LIMIT OF EXCAVATED TREE PLANTING PIT
6. PVC SCHD. 80 NIPPLE LENGTH AS REQUIRED
7. PVC LATERAL PIPE
8. PVC SCH 40 TEE OR ELL CONNECTED TO IRRIGATION NON PRESSURE LATERAL LINE
9. 3/4" DRAIN ROCK
10. 4" ROUND PERFORATED PLASTIC DRAIN PIPE 18" LONG
11. DISTANCE FROM FINISHED GRADE NOT TO EXCEED 2" MAX.
12. SEE PLANS FOR ADJACENT MATERIAL
13. PLANT CROWN
14. ROOT BALL
15. PLACE PERFERATED PIPE 6" MAX. FROM ROOTBALL TYP.
16. BACKFILL PLANTING MIX
17. PVC SCHED. 40 90 ELL.

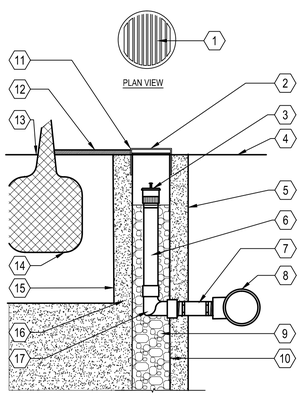

G BELOW GRADE TREE BUBBLER
SCALE: NOT TO SCALE

NOTE:
1. NIPPLES AND FITTINGS TO BE SAME SIZE AS VALVE IPT INLET THREAD SIZE

1. ROUND PLASTIC VALVE BOX WITH BOLT DOWN LID. TOP DIMENSION: 10".
2. 1 1/4" x 1 1/4" x 3/16" ANGLE IRON 30" LONG W/2 STAINLESS STEEL STRAPS (ONE AROUND QCV)
3. PVC MAIN LINE
4. 3" LONG SCHEDULE 80 PVC THREADED NIPPLE
5. QUICK COUPLING VALVE
6. FINISHED GRADE
7. SCHEDULE 80 PVC THREADED NIPPLE
8. 10" LONG SHCEDULE 80 PVC THREADED NIPPLE
9. UPC APPROVED SCHEDULE 40 PVC TEE OR ELBOW
10. SCHEDULE 80 PVC THREADED 90 DEGREE ELL

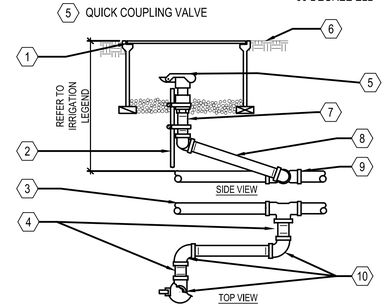

D QUICK COUPLING VALVE
SCALE: NOT TO SCALE

NOTES:
1. DO NOT LOCATE REMOTE CONTROL VALVE IN LAWN
2. COMPACT SOIL AROUND BOX TO SAME DENSITY AS ADJACENT UNDISTURBED SOIL
3. BUNDLE AND TAPE CONTROL WIRE TO MAINLINE EVERY 10'
4. NO SPLICES IN CONTROL WIRE WILL BE ALLOWED BETWEEN CONTROLLER AND VALVE

1. 18" LENGTH EXPANSION LOOP
2. WIRE SPLICE CONNECTOR
3. ID TAG FOR VALVE STATION NUMBER
4. VALVE BOX
5. FINISHED GRADE/TOP OF MULCH
6. REMOTE CONTROL VALVE
7. PVC SCH 80 NIPPLE (CLOSE)
8. PVC SCH 40 MIN 8" LONG
9. PVC 45 FITTING SCH 40
10. PVC SCH 40
11. S S FITTING
12. PVC MAINLINE PIPE
13. 6" PEA GRAVEL SUMP
14. LATERAL LINE CLASS 200 PVC
15. BRICK-1 PER CORNER

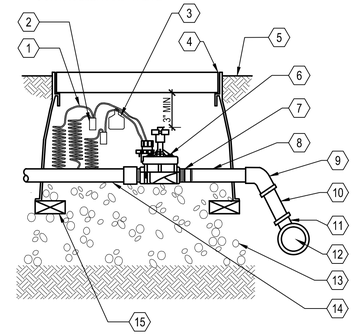

A REMOTE CONTROL VALVE
SCALE: NOT TO SCALE

NOTES:
1. BUBBLER DISTANCE TO ROOT BALL WILL VARY DEPENDING ON THE CONTAINER SIZE OF THE PLANT.
2. PLACE ALL BUBBLER ON UPHILL SIDE OF SLOPE.
3. IF APPLICABLE CONCEAL ALL EQUIPMENT UNDER MULCH.

1. POSITION BUBBLER OVER ROOT BALL
2. FLOOD BUBBLER NOZZLE SECURED TO SHRUB ADAPTER
3. UV RADIATION RESISTANT 1/2" PVC SCHED 40 (MIPT X SLIP) MALE ADAPTER
4. TUBING STAKES PVC COATED 12 GAUGE WIRE U STAKES QUANTITY AS NEEDED TO SECURE TUBING (2 MINIMUM)
5. I.P.S. FLEXIBLE SCH 40 PVC HOSE (BLACK)
6. SOIL RING (SEE PLANTING DETAILS)
7. FINISHED GRADE
8. 1/2" PVC SCH 40 (MIPT X SLIP) MALE ADAPTER UV RADIATION RESISTANT
9. PVC SCH 40 TEE OR ELL 3/4" X 3/4" X 1/2" (SLIP XSLIP X FIPT)
10. PVC LATERAL PIPE
11. 2" MULCH
12. PLANT CROWN
13. ROOT BALL

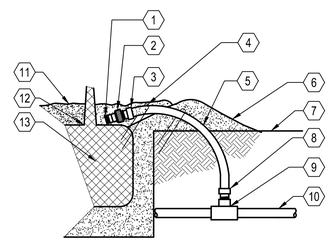

E SHRUB BUBBLER
SCALE: NOT TO SCALE

NOTES:
1. PLACE AGGREGATE PRIOR TO INSTALLATION OF VALVE BOX
2. INSTALL VALVE BOX SO TOP OF BOX IS FLUSH WITH ADJACENT HARDSCAPE

1. VALVE BOX WITH LID
2. FINISH GRADE/ BEFORE PLANTING
3. GATE VALVE
4. SCH 40 PVC MALE ADAPTOR
5. PVC SCH 40 MIN 8" LONG
6. PVC 45 FITTING SCH 40 (TYP.)
7. PVC SCH 40
8. 2 X 4 REDWOOD BLOCK (TYP.) 2 PLACES
9. PVC MAINLINE PIPE
10. 6" MINIMUM DEPTH PEA GRAVEL SUMP

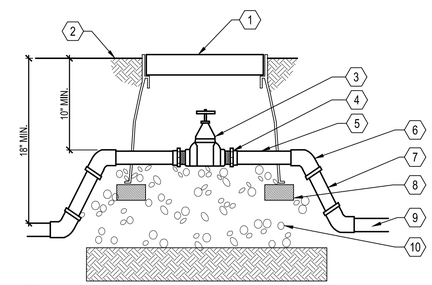

B GATE VALVE
SCALE: NOT TO SCALE

NOTE:
1. SEE IRRIGATION LEGEND FOR EQUIPMENT SPECIFICATION
2. INSTALL ALL IN ACCORDANCE WITH MANUFACTURER'S RECOMMENDATIONS

1. POTTERY
2. PLANT BACKFILL-PER PLANTING DETAILS
3. FLOOD BUBBLER ADJUSTABLE NOZZLE-PER IRRIGATION LEGEND. SECURE TO TORO 570Z SHRUB ADAPTER. POSITION BUBBLER OVER ROOT BALL AND ABOVE FINISHED GRADE
4. UV RADIATION RESISTANT 1/2" PVC SCH40 (MIPT X SLIP) MALE ADAPTER
5. TUBING STAKES PVC COATED 12 GAUGE WIRE U STAKES QUANTITY AS NEEDED TO SECURE TUBING (2 MIN) SALCO OR EQUAL
6. I.P.S. FLEXIBLE SCH 40 PVC HOSE (BLACK)
7. 1/2" CHECK VALVE
8. FINISHED GRADE
9. 1/2" PVC SCH 40 (MIPT X SLIP) MALE ADAPTER UV RADIATION RESISTANT
10. PVC SCH 40 TEE OR ELL 3/4" X 3/4" X 1/2" (SLIP XSLIP X FIPT)
11. PVC LATERAL PIPE- SIZE PER PLAN
12. MULCH
13. 1/2" PVC PIPE SCH 40

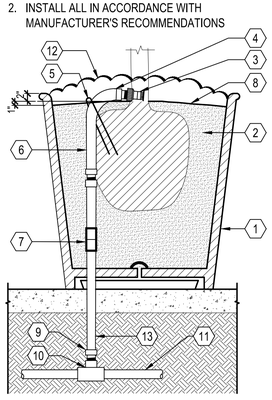

H POTTERY IRRIGATION
N.T.S.

NOTE:
1. THE TOTAL LENGTH OF ALL INTERCONNECTED DRIP LINE SHALL NOT EXCEED THE MAXIMUM RUN LENGTH.

1. AUTOMATIC FLUSH VALVE PLUMBED TO TUBING (TYP.)
2. PVC FLUSH MANIFOLD
3. MANIFOLD-TO-ELBOW CONNECTION (TYP.)
4. POINT OF CONNECTION TO PVC LATERAL
5. BACKFLOW PREVENTER
6. REMOTE CONTROL VALVE WITH FILTER AND PRESSURE REGULATOR
7. PVC SUPPLY MANIFOLD
8. MANIFOLD-TO-TEE CONNECTION
9. DRIPLINE LATERAL
10. AIR/VACUUM RELIEF LATERAL BLANK TUBING CENTERED ON MOUND OR BERM
11. AIR/VACUUM RELIEF VALVE PLUMBED TO BLANK TUBING AT EACH HIGH POINT
12. PERIMETER LATERALS 2" TO 4" FROM EDGE
13. ZONE PERIMETER
14. OPERATION INDICATOR

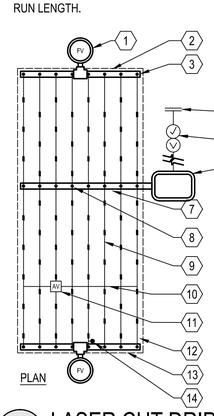

F LASER CUT DRIPLINE CENTER-FEED LAYOUT
SCALE: NOT TO SCALE

NOTES:
1. VERIFY LOCATION WITH PROJECT ELECTRICIAN.
2. ALL ELECTRICAL WORK MUST CONFORM TO LOCAL CODES. REFER TO PRODUCT LITERATURE FOR ADDITIONAL INSTALLATION REQUIREMENTS. THIS DRAWING IS PROVIDED FOR REFERENCE ONLY. INDIVIDUAL PROJECT REQUIREMENTS AND LOCAL CODES MAY DICTATE DIFFERENCES IN INSTALLATION PROCEDURES THAT ARE NOT IDENTIFIED ON THIS DETAIL.

1. EXTERIOR WALL MOUNT IRRIGATION CONTROLLER, SEE IRRIGATION LEGEND FOR SPECIFICATION
2. FINISHED GRADE
3. 1/2" UL APPROVED ELECTRICAL CONDUIT, RING NUT AND JUNCTION BOX FOR 120V AC ELECTRICAL POWER
4. GALVANIZED ELEC. WIRE CONDUIT (SIZE AS REQUIRED) PAINT TO MATCH BLDG.
5. PVC SWEEP ELL (DEPTH AS REQUIRED)
6. CONTROL WIRES TO CONTROL VALVES
7. EXTERIOR SURFACE FOR MOUNTING OF SPRINKLER CONTROLLER

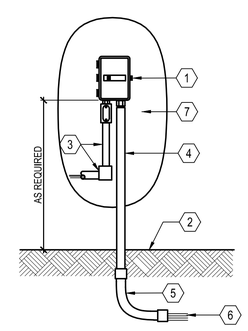

C WALL MOUNT CONTROLLER
N.T.S.

HMH
Land Use Entitlements
Land Planning
Landscape Architecture
Civil Engineering
Utility Design
Land Surveying
Stormwater Compliance
1570 Oakland Road San Jose, CA 95131
(408) 487-2200 HMHca.com

LICENSED LANDSCAPE ARCHITECT WILLIAM SERNA NO. 4466 Signature 3/28/17 Renewal Date Date STATE OF CALIFORNIA

GEORGE ZHANG
641 TERESI LANE
LOS ALTOS, CA 94024
(530) 340-9961

SITE DEVELOPMENT PERMIT
P-SD14-0021
ZHANG CONDOMINIUMS
1316 SOUTH MAIN STREET, MILPITAS, CA

NO	DATE	DESCRIPTION
3	5/02/2016	PER CITY COMMENTS
2	1/29/2016	PER CITY COMMENTS
1	8/14/2015	PER CITY COMMENTS
0	4/09/2015	PER CITY COMMENTS

PROJECT NO:	4480.00
CAD DWG FILE:	448000CL.DWG
DESIGNED BY:	CC
DRAWN BY:	CC
CHECKED BY:	RTH
DATE:	OCTOBER 13, 2014
SCALE:	1" = 10'

© HMH

IRRIGATION DETAILS

1.07

S:\PROJECTS\448000\LAP\LANNING\448000CL.DWG

G POTTERY WITH ACCENT PLANTING

D POTTERY WITH ACCENT PLANTING

A PRIVATE OPEN SPACE WITH PEDESTAL PAVERS

H PRIVATE OPEN SPACE CONCEPT

E RECTANGULAR PLANTERS

B PRIVATE OPEN SPACE WITH PEDESTAL PAVERS

I SYNTHETIC LAWN

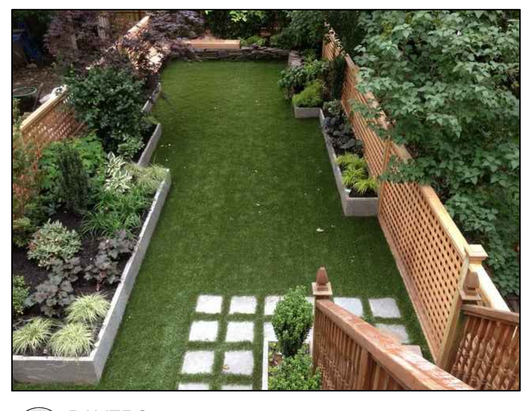

F PAVERS

C 1st FLOOR METAL SCULPTURAL ELEMENT

HMH
Land Use Entitlements
Land Planning
Landscape Architecture
Civil Engineering
Utility Design
Land Surveying
Stormwater Compliance
1570 Oakland Road
San Jose, CA 95131
(408) 487-2200
HMHca.com

LICENSED LANDSCAPE ARCHITECT
WILLIAM SERNA
NO. 4466
Signature
3/28/17
Renewal Date
Date
STATE OF CALIFORNIA

GEORGE ZHANG
641 TERESI LANE
LOS ALTOS, CA 94024
(530) 340-9961

SITE DEVELOPMENT PERMIT
P-SD14-0021
ZHANG CONDOMINIUMS
1316 SOUTH MAIN STREET, MILPITAS, CA

NO	DATE	DESCRIPTION
3	5/02/2016	PER CITY COMMENTS
2	1/29/2016	PER CITY COMMENTS
1	8/14/2015	PER CITY COMMENTS
0	4/09/2015	PER CITY COMMENTS

PROJECT NO:	4480.00
CAD DWG FILE:	448000CL.DWG
DESIGNED BY:	CC
DRAWN BY:	CC
CHECKED BY:	RTH
DATE:	OCTOBER 13, 2014
SCALE:	1" = 10'

© HMH

CONCEPT IMAGERY

1.08

S:\PROJECTS\448000\LA\PLANNING\448000CL.DWG

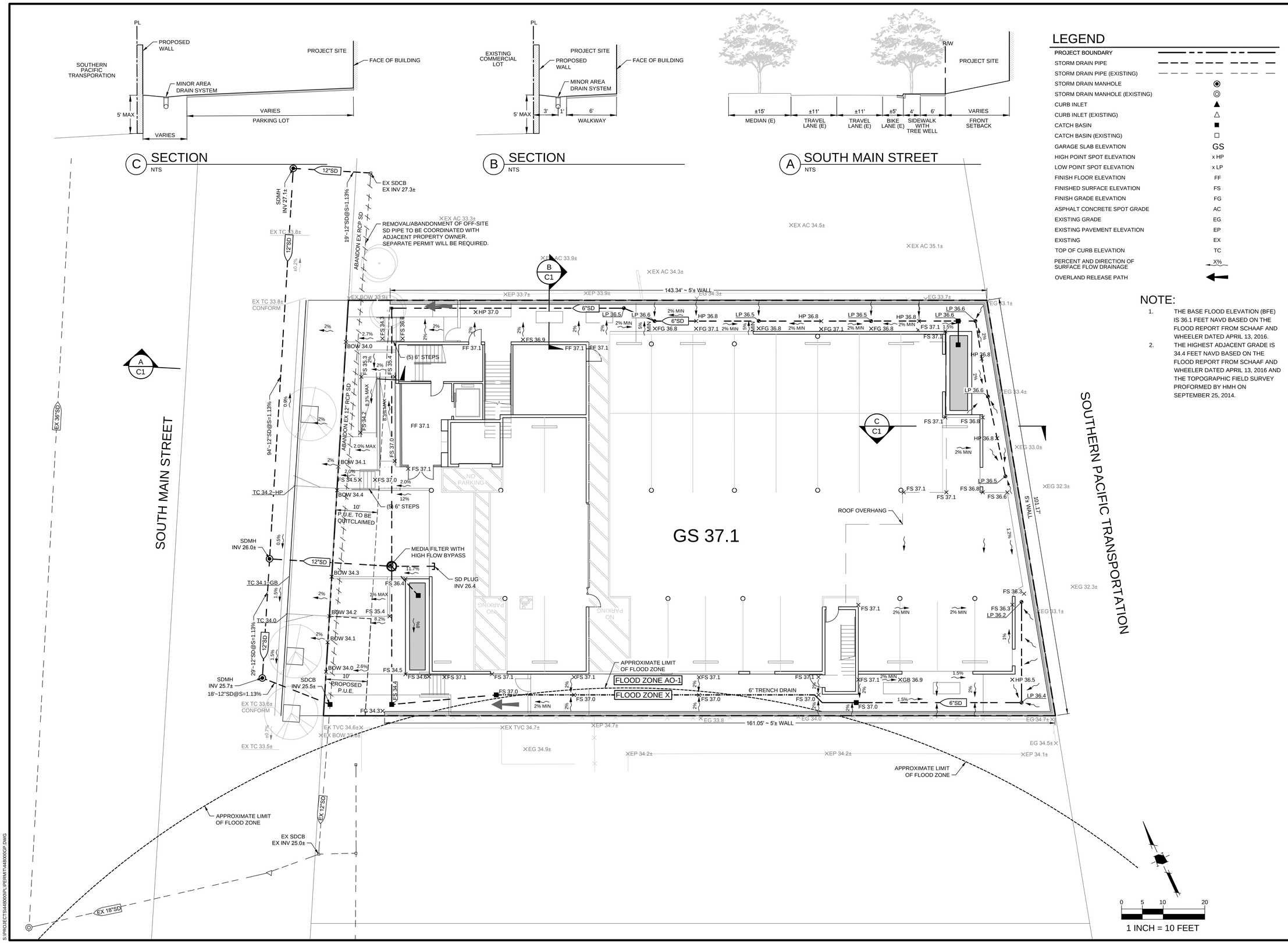

LEGEND

PROJECT BOUNDARY	
STORM DRAIN PIPE	
STORM DRAIN PIPE (EXISTING)	
STORM DRAIN MANHOLE	◉
STORM DRAIN MANHOLE (EXISTING)	◎
CURB INLET	▲
CURB INLET (EXISTING)	△
CATCH BASIN	■
CATCH BASIN (EXISTING)	□
GARAGE SLAB ELEVATION	GS
HIGH POINT SPOT ELEVATION	x HP
LOW POINT SPOT ELEVATION	x LP
FINISH FLOOR ELEVATION	FF
FINISHED SURFACE ELEVATION	FS
FINISH GRADE ELEVATION	FG
ASPHALT CONCRETE SPOT GRADE	AC
EXISTING GRADE	EG
EXISTING PAVEMENT ELEVATION	EP
EXISTING	EX
TOP OF CURB ELEVATION	TC
PERCENT AND DIRECTION OF SURFACE FLOW DRAINAGE	X%
OVERLAND RELEASE PATH	←

NOTE:

1. THE BASE FLOOD ELEVATION (BFE) IS 36.1 FEET NAVD BASED ON THE FLOOD REPORT FROM SCHAAF AND WHEELER DATED APRIL 13, 2016.
2. THE HIGHEST ADJACENT GRADE IS 34.4 FEET NAVD BASED ON THE FLOOD REPORT FROM SCHAAF AND WHEELER DATED APRIL 13, 2016 AND THE TOPOGRAPHIC FIELD SURVEY PROFORMED BY HMH ON SEPTEMBER 25, 2014.

HMH
Land Use Entitlements
Land Planning
Landscape Architecture
Civil Engineering
Utility Design
Land Surveying
Stormwater Compliance
1570 Oakland Road
San Jose, CA 95131
(408) 487-2200
HMHca.com

GEORGE ZHANG
641 TERESI LANE
LOS ALTOS, CA 94024
(530) 340-9961

SITE DEVELOPMENT PERMIT
P-SD14-0021
ZHANG CONDOMINIUMS
1316 SOUTH MAIN STREET, MILPITAS, CA

NO	DATE	DESCRIPTION
4	5/02/2016	PER CITY COMMENTS
3	1/29/2016	PER CITY COMMENTS
2	8/14/2015	PER CITY COMMENTS
1	4/09/2015	PER CITY COMMENTS

PROJECT NO:	4480.00
CAD DWG FILE:	448000GP.DWG
DESIGNED BY:	ZEF
DRAWN BY:	MAC
CHECKED BY:	ZEF
DATE:	OCTOBER 13, 2014
SCALE:	1" = 10'

© HMH

GRADING AND DRAINAGE PLAN

C1

S:\PROJECTS\448000\PL\PERMIT\448000GP.DWG
PLOTTED: 5/4/2016 5:30 PM

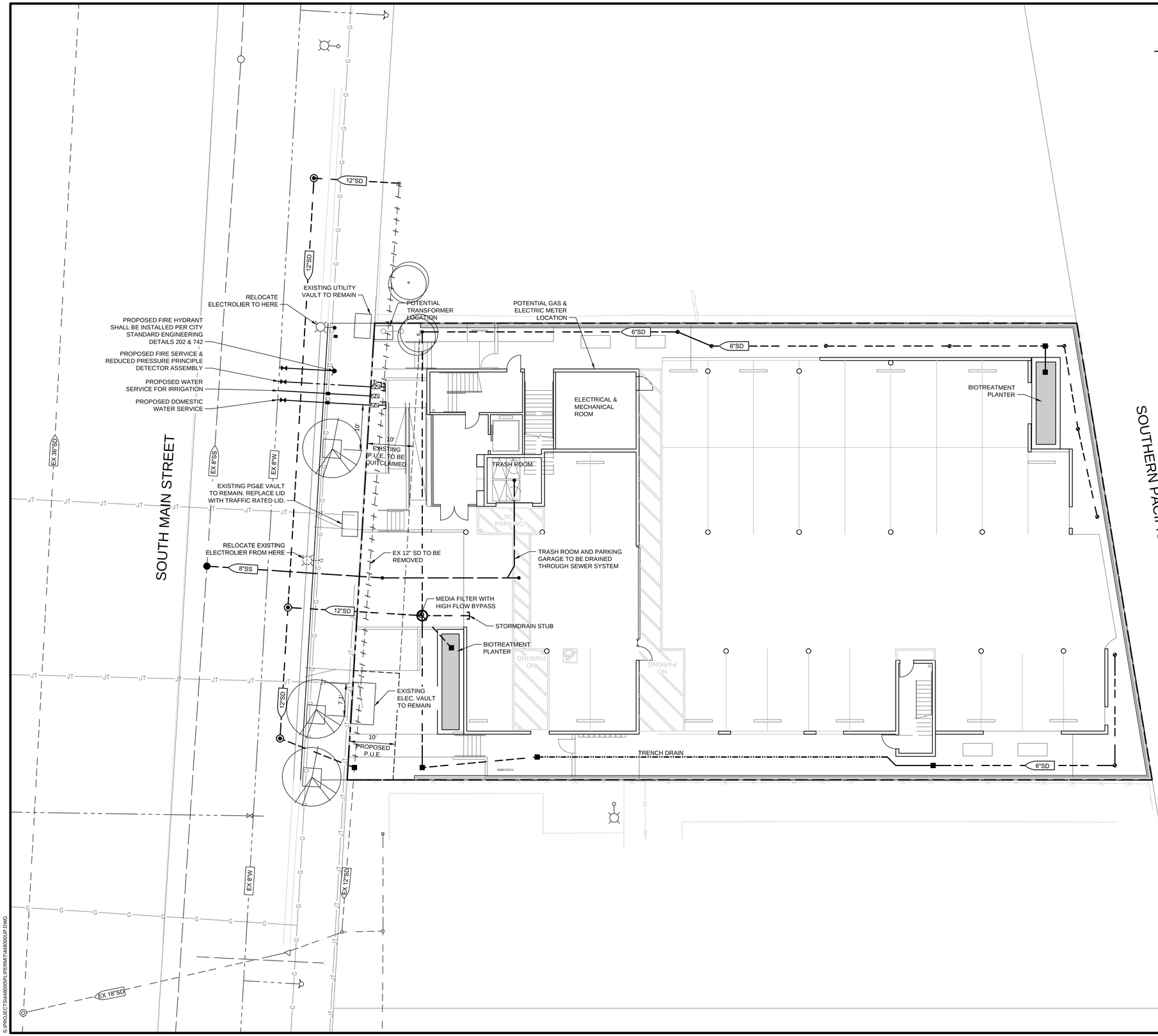

LEGEND

PROJECT BOUNDARY	
STORM DRAIN PIPE	12"SD
STORM DRAIN PIPE (EXISTING)	EX 12"SD
STORM DRAIN MANHOLE (EXISTING)	
CURB INLET	
CURB INLET (EXISTING)	
CATCH BASIN	
CATCH BASIN (EXISTING)	
AREA DRAIN	
SANITARY SEWER PIPE	6"SS
SANITARY SEWER PIPE (EXISTING)	EX 6"SS
STORM DRAIN MANHOLE (EXISTING)	
SANITARY SEWER CLEANOUT (EXISTING)	
SANITARY SEWER CLEANOUT	
WATER LINE	
WATER LINE (EXISTING)	EX 6"W
WATER METER	
WATER VALVE	
WATER VALVE (EXISTING)	
BACK FLOW PREVENTER	
FIRE DEPARTMENT CONNECTION	
FIRE HYDRANT (EXISTING)	
JOINT TRENCH	JT
JOINT TRENCH (EXISTING)	JT
GAS LINE (EXISTING)	G
FIBER OPTIC CABLE (EXISTING)	FO
ELECTROLIER	
ELECTROLIER (EXISTING)	
RELOCATE UTILITY	
ELECTRIC VAULT (EXISTING)	

0 5 10 20

1 INCH = 10 FEET

HMH

Land Use Entitlements
Land Planning
Landscape Architecture
Civil Engineering
Utility Design
Land Surveying
Stormwater Compliance

1570 Oakland Road
San Jose, CA 95131

(408) 487-2200
HMHca.com

GEORGE ZHANG
641 TERESI LANE
LOS ALTOS, CA 94024
(530) 340-9961

SITE DEVELOPMENT PERMIT
P-SD14-0021
ZHANG CONDOMINIUMS
1316 SOUTH MAIN STREET, MILPITAS, CA

NO	DATE	DESCRIPTION
5	6/16/2016	PER CITY COMMENTS
4	5/02/2016	PER CITY COMMENTS
3	1/29/2016	PER CITY COMMENTS
2	8/14/2015	PER CITY COMMENTS
1	4/09/2015	PER CITY COMMENTS

PROJECT NO:	4480.00
CAD DWG FILE:	448000UP.DWG
DESIGNED BY:	
DRAWN BY:	MAC
CHECKED BY:	ZEF
DATE:	OCTOBER 13, 2014
SCALE:	1" = 10'

© HMH

CONCEPTUAL UTILITY PLAN

C2

S:\PROJECTS\448000\PL\PERMIT\448000UP.DWG

PLOTTED: 6/16/2016 2:19 PM

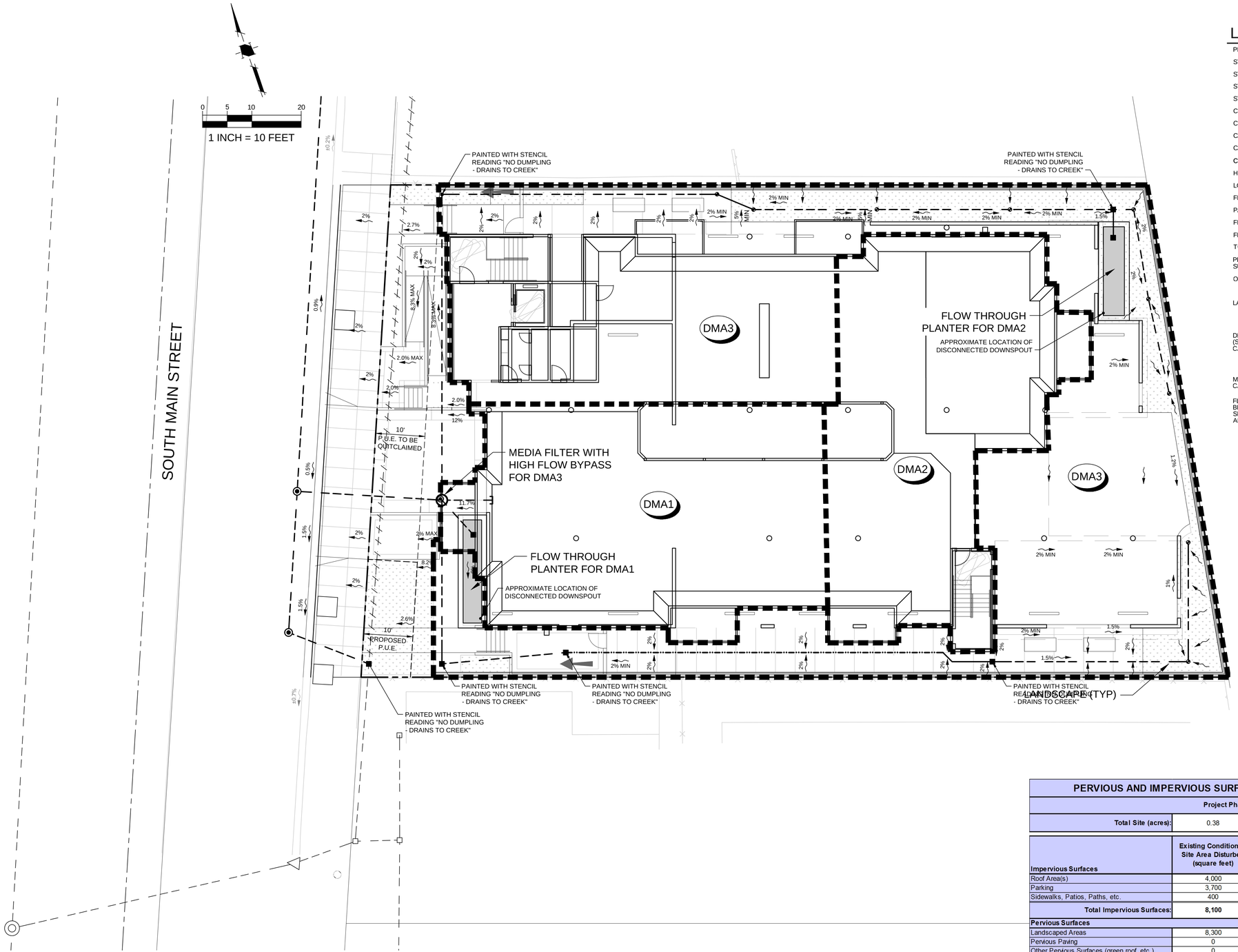

LEGEND

PROJECT BOUNDARY	
STORM DRAIN PIPE	XX"SD
STORM DRAIN PIPE (EXISTING)	EX XX"SD
STORM DRAIN MANHOLE	
STORM DRAIN MANHOLE (EXISTING)	
CURB INLET	
CURB INLET (EXISTING)	
CATCH BASIN	
CATCH BASIN (EXISTING)	
CURB CUT	
HIGH POINT SPOT ELEVATION	x HP
LOW POINT SPOT ELEVATION	x LP
FINISH FLOOR ELEVATION	FF
PAD ELEVATION	PAD
FINISH GRADE ELEVATION	FG
FLOW LINE	FL
TOP OF CURB ELEVATION	TC
PERCENT AND DIRECTION OF SURFACE FLOW DRAINAGE	X%
OVERLAND RELEASE PATH	
LANDSCAPE (SELF TREATING)	
DRAINAGE MANAGEMENT AREA (SEE SHEET C4 FOR CALCULATIONS AND DETAILS)	DMA1
MEDIA FILTER (SEE SHEET C4 FOR CALCULATIONS AND DETAILS)	
FLOW THROUGH BIOTREATMENT PLANTER (SEE SHEET C4 FOR CALCULATIONS AND DETAILS)	

Site Conditions	
Soil Type	Clay (D)
Depth to Groundwater	0-10 feet
100-Year Flood Elevation	Zone AO (1)
Receiving Water Body	Lower Penitencia Creek
Pollutants	Sediment, Grease, Oil, Heavy Metals, Hydrocarbons, Trash, Nutrients, Pesticides
Pollutant Source Areas	Roofs, Paved Podium Surfaces, Driveways, Trash Receptacles, Landscaping
Source Control Measures	Stenciled Inlets, Covered Trash Enclosure, Covered Parking,

** Soil type and depth to groundwater information per C.3 Stormwater Handbook, Santa Clara Valley Urban Runoff Pollution Prevention Program, April 2012. Flood elevation information per FEMA Flood Insurance Rate Maps, May 18, 2009.*

PERVIOUS AND IMPERVIOUS SURFACES COMPARISON TABLE			
Project Phase Number: (N/A, 1, 2, 3, etc.)			
Total Site (acres):	0.38	**Total Area of Site Disturbed (acres):**	0.38
Impervious Surfaces	**Existing Condition of Site Area Disturbed (square feet)**	**Proposed Condition of Site Area Disturbed (square feet)**	
		Replaced[1]	**New[2]**
Roof Area(s)	4,000	4,000	5500
Parking	3,700	2,100	0
Sidewalks, Patios, Paths, etc.	400	2,000	800
Total Impervious Surfaces:	**8,100**	**8,100**	**6,300**
Pervious Surfaces			
Landscaped Areas	8,300	2,000	0
Pervious Paving	0	0	0
Other Pervious Surfaces (green roof, etc.)	0	0	0
Total Pervious Surfaces:	**8,300**	**2,000**	**0**
Total Proposed Replaced + New Impervious Surfaces:			**14400**
Total Proposed Replaced + New Pervious Surfaces:			**2000**

Regulated Project: Any project that creates new and/or replaces (individually or collectively) 10,000 square feet or more of impervious surface area. Additonal data verifying the percent replacement of impervious surface area may be requested for any Regulated Project that appears to be subject to Provisions C.3.b.ii.(1)(c) or C.3.b.ii.(1)(d) (commonly known as "the 50% Rule").

Footnotes:

[1]**Proposed Replaced Impervious Surface:** All impervious surfaces added to any area of the site that was a previously existing impervious surface.

[2]**Proposed New Impervious Surface:** All impervious surfaces added to any area of the site that was a previously existing pervious surface.

TREATMENT CONTROL SUMMARY TABLE								
Area	*Type*	*Drainage Area (s.f.)*	*Impervious Area (s.f.)*	*Pervious Area (s.f.)*	*Bioretention Area Required* (s.f.)*	*Bioretention Area Provided (s.f.)*	*Number of Filters Required (ft.)*	*Location*
DMA1	Bioretention Area	3280	3280	-	76	76	-	Onsite
DMA 2	Bioretention Area	3280	3280	-	76	76	-	Onsite
DMA 3	Media Filter	9840	7840				1	Onsite

* *Based on Combination Flow and Volume Method per SCVURPPP C.3 Guidebook*

HMH
Land Use Entitlements
Land Planning
Landscape Architecture
Civil Engineering
Utility Design
Land Surveying
Stormwater Compliance
1570 Oakland Road San Jose, CA 95131
(408) 487-2200 HMHca.com

GEORGE ZHANG
641 TERESI LANE
LOS ALTOS, CA 94024
(530) 340-9961

SITE DEVELOPMENT PERMIT
P-SD14-0021
ZHANG CONDOMINIUMS
1316 SOUTH MAIN STREET, MILPITAS, CA

NO	DATE	DESCRIPTION
5	6/16/2016	PER CITY COMMENTS
4	5/02/2016	PER CITY COMMENTS
3	1/29/2016	PER CITY COMMENTS
2	8/14/2015	PER CITY COMMENTS
1	4/09/2015	PER CITY COMMENTS

PROJECT NO:	4480.00
CAD DWG FILE:	448000SW.DWG
DESIGNED BY:	
DRAWN BY:	
CHECKED BY:	ZEF
DATE:	OCTOBER 13, 2014
SCALE:	NOT TO SCALE

© HMH

STORMWATER MITIGATION PLAN

C3

S:\PROJECTS\448000\PL\PERMIT\448000SW.DWG

PLOTTED: 6/16/2016 3:07 PM

PF-MH-48-WA

Washington GULD*

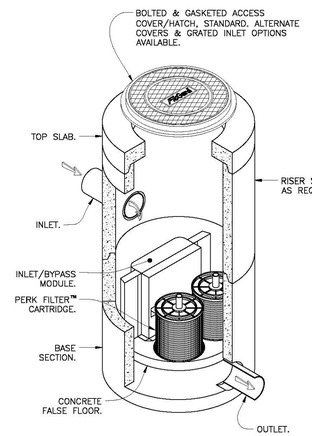

Notes:

1. Precast concrete structure shall be manufactured in accordance with ASTM Designation C478.
2. Filter system shall be supplied with traffic rated (H20) bolted & gasketed Ø36" circular access covers with risers as required. Field poured concrete collar required, by others.
3. Inlet & outlet pipe(s) are to be Ø18.00" maximum. Inlet pipes must enter the structure in the inlet bay.
4. Inlet chamber shall be supplied with drain-down device designed to remove standing water between storm events.
5. Minimum separation between invert in & invert out is outlet pipe diameter plus 4.00".
6. For depths less than specified minimums contact Oldcastle® Stormwater Solutions for engineering assistance.

* **Treatment Flow Rates shown conform to Washington State GULD Specifications**

Media Filtration

Perk Filter™
Ø48.00" Manhole
Washington State GULD
One to Two Cartridges / Stacks

Oldcastle® Stormwater Solutions
7921 Southpark Plaza, Suite 200 | Littleton, CO | 80120 | Ph: 800.579.8819 | oldcastlestormwater.com

THIS DOCUMENT IS THE PROPERTY OF OLDCASTLE PRECAST, INC. IT IS SUBMITTED FOR REFERENCE PURPOSES ONLY AND SHALL NOT BE USED IN ANY WAY INJURIOUS TO THE INTERESTS OF SAID COMPANY. COPYRIGHT © 2016 OLDCASTLE PRECAST, INC. ALL RIGHTS RESERVED.

DRAWING NO.	REV	REQ	DATE
PF-MH-48-WA	NR	ECO--0132 ISM 4/27/15	ISM 4/27/15

SHEET 1 OF 2

PF-MH-48-WA

Washington GULD*

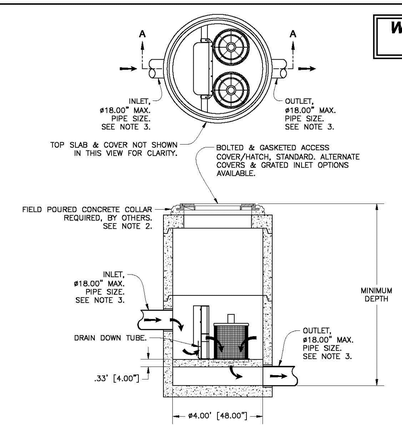

SECTION A-A

Minimum Depth						
PIPE SIZE	Ø6.00"	Ø8.00"	Ø10.00"	Ø12.00"	Ø15.00"	Ø18.00"
CARTRIDGE TYPE	MINIMUM DEPTH RIM TO OUTLET	MINIMUM DEPTH RIM TO OUTLET	MINIMUM DEPTH RIM TO OUTLET	MINIMUM DEPTH RIM TO OUTLET	MINIMUM DEPTH RIM TO OUTLET	MINIMUM DEPTH RIM TO OUTLET
12"	3.67' [44.00"]	3.92' [47.00"]	4.17' [50.00"]	4.42' [53.00"]	4.67' [56.00"]	4.92' [59.00"]
18"	4.42' [53.00"]	4.67' [56.00"]	4.92' [59.00"]	5.17' [62.00"]	5.42' [65.00"]	5.67' [68.00"]
12" + 12"	5.17' [62.00"]	5.42' [65.00"]	5.67' [68.00"]	5.92' [71.00"]	6.17' [74.00"]	6.42' [77.00"]
12" + 18"	5.67' [68.00"]	5.92' [71.00"]	6.17' [74.00"]	6.42' [77.00"]	6.67' [80.00"]	6.92' [83.00"]

Ø48.00" PERK FILTER MANHOLE TREATMENT FLOW RATES, TOTAL FLOW CAPACITIES & MAXIMUM HEAD LOSS								
CARTRIDGE STACK QUANTITY	CARTRIDGE STACK CONFIGURATION							
	12"		18"		12" & 12"		12" & 18"	
	TREATMENT FLOW RATE (GPM / CFS)	TOTAL FLOW CAPACITY (CFS)	TREATMENT FLOW RATE (GPM / CFS)	TOTAL FLOW CAPACITY (CFS)	TREATMENT FLOW RATE (GPM / CFS)	TOTAL FLOW CAPACITY (CFS)	TREATMENT FLOW RATE (GPM / CFS)	TOTAL FLOW CAPACITY (CFS)
1	6.8 / 0.015	2.47	10.2/ 0.022	3.05	13.6 / 0.03	3.45	17 / 0.037	3.62
2	13.6 / 0.03	2.47	20.4 / 0.045	3.05	27.2 / 0.06	3.45	34 / 0.075	3.62
MAXIMUM HEAD LOSS	1.7 FEET		2.3 FEET		2.9 FEET		3.5 FEET	

Media Filtration

Perk Filter™
Ø48.00" Manhole
Washington State GULD
One to Two Cartridges / Stacks

Oldcastle® Stormwater Solutions
7921 Southpark Plaza, Suite 200 | Littleton, CO | 80120 | Ph: 800.579.8819 | oldcastlestormwater.com

THIS DOCUMENT IS THE PROPERTY OF OLDCASTLE PRECAST, INC. IT IS SUBMITTED FOR REFERENCE PURPOSES ONLY AND SHALL NOT BE USED IN ANY WAY INJURIOUS TO THE INTERESTS OF SAID COMPANY. COPYRIGHT © 2016 OLDCASTLE PRECAST, INC. ALL RIGHTS RESERVED.

DRAWING NO.	REV	REQ	DATE
PF-MH-48-WA	NR	ECO--0132 ISM 4/27/15	ISM 4/27/15

SHEET 2 OF 2

Media Filter Sizing

The following steps for sizing the proposed manhole media filter units are based on the Rational Method, consistent with the methodology provided by the Santa Clara Valley Urban Runoff Pollution Prevention Program for calculating Provision C.3 design flow rates.

Drainage Area M

Step 1. Calculate the peak flow rate from the water quality storm (Q_{beta}) for the site.

Use the Rational Method Q=CIA to solve for Q, where Q = Flow (cubic feet/second), C = Runoff Coefficient, I = Rainfall Intensity (inches/hour), and A = Total Site Area (acres).

C = 0.75

I = 0.19 in./hr. (15.5'- Mean Annual Precip. @ site / 13.9'- Mean Annual Precip. - SJ Airport Gage reference) x (0.17 in./hr. Design Rainfall Intensity per SCVURPPP)

A = 9840 ft² = 0.23 acres

Q = CIA = 0.75 x 0.19 in/hr x 0.23 ac. = 0.033 cfs

Step 2. Calculate the number of filter modules/cartridges required to treat the peak water quality flow rate (N_{flow}) for the site.

N_{flow} = Q = 0.033 cfs

Each module treats 0.22 cfs (per Perk Filter 18" cartridge - see detail)

0.033 cfs / 0.22 cfs/module = 2 modules (Perk Filter Module)

GENERAL SPECIFICATIONS FOR MAINTENANCE OF
FLO-GARD™ PERK FILTER

SCOPE:

Federal, State, and local Clean Water Act regulations of those of insurance carriers require that stormwater filtration systems be maintained and serviced on a recurring basis. The intent of the regulations is to ensure that the systems, on a continuing basis, efficiently remove pollutants from stormwater runoff, thereby preventing pollution of the nation's water resources. These specifications apply to the Flo-Gard™ Perk Filter.

RECOMMENDED FREQUENCY OF SERVICE:

Drainage Protection Systems (DPS) recommends that installed Flo-Gard™ Perk Filters be serviced on a recurring basis. Ultimately, the frequency depends on the amount of runoff, pollutant loading and interference from debris (leaves, vegetation, cans, paper, etc.); however, it is recommended that each installation be serviced a minimum of three times per year, with a change of filter medium once per year. (See below) DPS technicians are available to do an on-site evaluation, upon request.

RECOMMENDED TIMING OF SERVICE:

DPS guidelines for the timing of service are as follows:

1. For areas with a definite rainy season: Prior to, during and following the rainy season.
2. For areas subject to year-round rainfall: On a recurring basis (at least three times per year).
3. For areas with winter snow and summer rain: Prior to and just after the snow season and during the summer rain season.
4. For installed devices not subject to the elements (washracks, parking garages, etc.): On a recurring basis (no less than three times per year).

SERVICE PROCEDURES:

1. The service shall commence with collection and removal of sediment and debris (litter, leaves, papers, cans, etc.) and broom sweeping around the drainage inlet. Accumulated materials shall be placed in a DOT approved container for later disposal.
2. The inlet grate shall be removed and placed to one side.
3. The catch basin and the filter shall be inspected for possible illegal dumping. If illegal dumping has occurred, the proper authorities and property owner representatives shall be notified as soon as practicable.
4. An industrial vacuum shall be used to carefully remove all sediment and debris from the detention area (above the base plate).
5. The top of the hydrocarbon filter shall be removed and:
   a. If the scheduled service does not include change of the filter medium, the condition of the installed filter medium is checked for continued efficiency.
   b. If the scheduled service does include a change of filter medium, the medium will be removed and placed in a DOT approved container, new medium installed and the top of the filter replaced.
6. The filter structure, detention area, support frame, base plate attaching bolts and the condition of the expansion foam sealant shall be inspected. Minor damage or defects found shall be corrected on-the-spot and a notation made on the maintenance record. More extensive deficiencies that affect the efficiency of the filter, if approved by the customer representative, will be corrected and an invoice submitted to the representative along with the Maintenance Record.
7. The inlet grate shall be replaced.

NOTES:
1. SEE LANDSCAPE PLANS FOR PLANTING AND IRRIGATION.

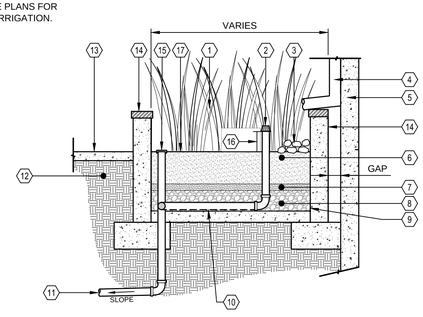

1. PLANT MATERIAL (SEE LANDSCAPE PLANS)
2. OVER FLOW PIPE WITH ATRIUM GRATE
3. COBBLE DISSIPATOR
4. DOWNSPOUT
5. BUILDING WALL (SEE STRUCTURAL PLANS)
6. SANDY LOAM WITH PERCOLATION RATE OF 5" TO 10" PER HOUR (MIN. 18" DEPTH), SHALL CONFORM TO TEH SAN FRANCISCO BAY MUNICIPAL REGIONAL PERMIT-REQUIRED "MODEL BIORETENTION SOIL MEDIA SPECIFICATION" OR EQUIVALENT
7. PEA GRAVEL (MIN 2" DEPTH)
8. DRAIN ROCK - CALTRANS STANDARD SECTION 68.-1.025 CLASS 2 PERMEABLE MATERIAL OR EQUIVALENT (MIN 12" DEPTH)
9. WATERPROOFING BY OTHERS
10. PERFORATED PVC SUBDRAIN PIPE (MIN. 4" DIA) PERFORATIONS FACING DOWNWARDS
11. PVC PIPE TO STORM DRAIN
12. NATIVE GRADE OR CERTIFIED COMPACTED SUBGRADE
13. ADJACENT SIDEWALK (PER LANDSCAPE PLAN)
14. PLANTER WALL
15. CLEANOUT WITH CAP AT FINISHED GRADE
16. 12" PONDING DEPTH
17. FLOAT RESISTANCE MULCH ON TOP OF SANDY LOAM. (MIN 2" DEPTH).

FLOW THROUGH PLANTER
SCALE: N.T.S.

FLOW-THROUGH PLANTER MAINTENANCE

Per the SCVURPPP C.3 Handbook recommendations, the maintenance objectives include maintaining healthy vegetation at an appropriate size; avoiding clogging; and ensuring the structural integrity of the planter box and the proper functioning of inlets, outlets, and the high-flow bypass.

- Conduct a biannual (twice yearly) evaluation of the health of the vegetation and remove and replace any dead or dying plants.
- Maintain the vegetation and the irrigation system. Prune and weed as needed to keep the planter neat and orderly in appearance. Prune or remove any overgrown plants or shrubs that may interfere with planter operation. Clean up fallen leaves or debris.
- Avoid the use of pesticides and quick-release synthetic fertilizers, and follow the principles of integrated pest management (IPM). Check with the local jurisdiction for any local policies regarding the use of pesticides and fertilizers.
- Before the wet season begins, check that there is sufficient biotreatment soil media to effectively filter stormwater (18-inch depth) and that the soil is at the appropriate level to allow water to temporarily pond above the soil surface (6-12 inches per design). Remove any accumulations of sediment, litter and debris, and if needed, replenish mulch.
- Inspect the planter box after storms to ensure the structural integrity of the box and that the planter is not clogging, and is draining within 3-4 hours after storm events. Till or replace the soil as necessary.
- Periodically inspect the downspouts from rooftops or sheet flow from paving to ensure that flow to the planter is unimpeded. Remove any debris and repair any damaged pipes. Check splash blocks or rocks and repair, replace or replenish as necessary.
- Periodically inspect the overflow pipe to make sure that it can safely convey excess flows to a storm drain. Repair or replace any damaged or disconnected piping.

SIZING FOR BIOCELLS 1 & 2

SIZING FOR VOLUME BASED TREATMENT

Step 1: Drainage Area and % Impervious
A= 3280 s.f.
Impervious Area = 3280 s.f. **% Imperviousness= 100.00%**

Step 2: Calculate Correction Factor
MAP_{site} = 15.5 Correction Factor= **1.1151**
MAP_{gage} = 13.9

Step 3: Identify the representative soil type for the BMP Drainage Area. Use Figure B-1. Indicate Soil Type with "X" in the appropriate box.
Clay (D): X Sandy Clay (D): Clay Loam (D):
Silt Loam/Loam (B): Not Applicable (100% Impervious):
Are the soils outside the building footprint not graded/compacted? **No** Yes/No
If no, and the soil will be compacted during site preperation and grading, the soils infiltration ability will be decresed. Modify your answer to a soil with a lower infilatraion rate (eg. Silt Loam to Clay)
Modified Soil Type: D

Step 4: Average slope of the site
S= 1.00%

Step 5: Determine the unit basin storage volume (UBS) from sizing curves.
UBS Volume for 1% Slope ($UBS_{1\%}$) = 0.577 inches (Use Figure B-2)
UBS Volume for 15% Slope ($UBS_{15\%}$) = 0.6 inches (Use Figure B-5)
UBS Volume for X% Slope ($UBS_{X\%}$) = 0.577 inches (Corrected Slope for the site)

Step 6: Determine the Adjusted UBS
Adjusted UBS = Correction Factor (Step 2) x $UBS_{X\%}$ (Step 5)
Adjusted UBS = 0.64342 inches

Step 7: Determine the BMP Design Volume
Design Volume = Adjusted UBS (Step 6) x Drainage Area (Step 1) x 1ft/12inch
Design Volume = 175.87 ft^3

COMBO FLOW & VOLUME BIORETENTION CALCULATION

Step 8: Determine the equivalent impervious area.
Total Drainage Area = 3,280.00 sq. ft
Impervious Area = 3,280.00 sq. ft
Pervious Area = 0.00 sq. ft
Equivalent Impervious Area = 0.00 **Total Equivalent Impervious = 3,280.00** sq. ft

Step 9: Calculate the Durtation of the Rain Event.
Rainfall intensity = 0.2 in/hr
Duration = Adjusted UBS (Step 6) / Rainfall Intensity
Duration = 3.21709 hrs

Step 10: Calculate the Bioretention or Flow Through Planter design based by optimizing the depth of ponding by adjusting the surface area.
Estimate the Surface Area = 76 sq. ft (Typically start with Total Impervious x 0.03)
Volume of Treated Runoff = 101.8744 cu. ft
Volume in Ponding Area = 73.992986 cu. ft
Depth of Ponding = 0.9735919 ft Depth of Ponding = 11.7 inches (Round up)
If Depth of Ponding is less than 6" the design can be optimized with a smaller surface area. (repeat)
If Depth of Ponding is greater than 12" a larger surface area will be required (repeat)
If Depth of Ponding is between 6" to 12" this is the range allowable for bioretention of flow through planters.

HMH
Land Use Entitlements
Land Planning
Landscape Architecture
Civil Engineering
Utility Design
Land Surveying
Stormwater Compliance
1570 Oakland Road (408) 487-2200
San Jose, CA 95131 HMHca.com

GEORGE ZHANG
641 TERESI LANE
LOS ALTOS, CA 94024
(530) 340-9961

SITE DEVELOPMENT PERMIT
P-SD14-0021
ZHANG CONDOMINIUMS
1316 SOUTH MAIN STREET, MILPITAS, CA

NO	DATE	DESCRIPTION
5	6/16/2016	PER CITY COMMENTS
4	5/02/2016	PER CITY COMMENTS
3	1/29/2016	PER CITY COMMENTS
2	8/14/2015	PER CITY COMMENTS
1	4/09/2015	PER CITY COMMENTS

PROJECT NO:	4480.00
CAD DWG FILE:	448000SW.DWG
DESIGNED BY:	
DRAWN BY:	
CHECKED BY:	ZEF
DATE:	OCTOBER 13, 2014
SCALE:	NOT TO SCALE

© HMH

STORMWATER CONTROL PLAN DETAILS

C4

S:\PROJECTS\448000\PLUPERMIT\448000SW.DWG

PLOTTED: 6/16/2016 4:14 PM