Final Environmental Impact Report

Milpitas Midtown Specific Plan Transportation Update

SCH# 2000092027

City of Milpitas

September 2008

TABLE OF CONTENTS

PREFACE 2

SECTION 1 LIST OF AGENCIES AND INDIVIDUALS RECEIVING THE DRAFT SEIR OR NOTICE OF AVAILABILITY OF THE DRAFT SEIR 4

SECTION 2 LIST OF AGENCIES AND INDIVIDUALS COMMENTING ON THE DRAFT SEIR 6

SECTION 3 RESPONSES TO COMMENTS RECEIVED ON THE DRAFT SEIR 7

PREFACE

This document, together with the June 2008 Draft Supplemental Environmental Impact Report (Draft SEIR) for the Milpitas Midtown Specific Plan Transportation Update, constitutes the Final Environmental Impact Report (Final EIR) for the proposed project. Under the California Environmental Quality Act (CEQA), the Final EIR is an informational document prepared by the Lead Agency that must be considered by the decision-makers before approving the proposed project. CEQA Guidelines Section 15132 specifies that a Final EIR shall consist of the following:

- The Draft EIR or a revision of the draft;
- Comments and recommendations received on the Draft EIR either verbatim or in summary;
- A list of persons, organizations, and public agencies commenting on the Draft EIR;
- The responses of the Lead Agency to the significant environmental points raised in the review and consultation process; and
- Any other information added by the Lead Agency.

This Final EIR will be used by the City and other Responsible Agencies in making decisions regarding the project. The CEQA Guidelines require that, while the information in the Final EIR does not control the agency's ultimate discretion on the project, the agency must respond to each significant effect identified in the Final EIR by making written findings for each of those significant effects before it approves a project.

According to Section 21081 of the California Public Resources Code, no public agency shall approve or carry out a project for which an EIR has been certified which identifies one or more significant environmental effects on the environment that would occur if the project is approved or carried out unless both of the following occur:

(A) The public agency makes one or more of the following findings with respect to each significant effect:

(1) Changes or alterations have been required in, or incorporated into, the project which mitigate or avoid the significant effects on the environment.

(2) Those changes or alterations are within the responsibility and jurisdiction of another public agency and have been, or can and should be, adopted by that other agency.

(3) Specific economic, legal, social, technological, or other considerations, including considerations for the provision of employment opportunities for highly trained workers, make infeasible the mitigation measures or alternatives identified in the EIR.

(B) With respect to significant effects which were subject to a finding under paragraph (3) of subdivision (A), the public agency finds that specific overriding economic, legal, social,

technological, or other benefits of the project outweigh the significant effects on the environment.

The Final EIR will be made available to the public and commenting public agencies 10 days prior to the EIR certification hearing.

All documents referenced in this Final EIR are available for public review at the Milpitas City Hall 455 East Calaveras Boulevard, Milpitas, California, on weekdays during normal business hours.

SECTION 1 LIST OF AGENCIES AND INDIVIDUALS RECEIVING THE DRAFT SEIR OR NOTICE OF AVAILABILITY OF THE DRAFT SEIR

State of California

- Regional Water Quality Control Board, Region 2
- Department of Parks and Recreation
- Native American Heritage Commission
- Public Utilities Commission
- Office of Historic Preservation
- Department of Fish and Game, Region 3
- Department of Water Resources
- Department of Conservation
- California Highway Patrol
- Caltrans, District 4
- San Francisco Bay Conservation and Development Commission
- State Water Resources Control Board, Clean Water Program
- Caltrans, Division of Aeronautics

Federal Agencies

- U.S. Army Corps of Engineers
- U.S. Fish & Wildlife Service

County and Regional Agencies

- Association of Bay Area Governments
- Bay Area Air Quality Management District
- Santa Clara County Planning Department
- Santa Clara County Open Space Authority
- Santa Clara County Roads and Airports Department
- Santa Clara Valley Transportation Authority
- Santa Clara Valley Water District
- Metropolitan Transportation Commission
- San Francisco Water Department
- San Francisco PUC
- San Jose/Santa Clara Water Pollution Control Plant

Local Governments

- City of Fremont
- City of Santa Clara
- City of San Jose
- County of Santa Clara

School Districts

- Berryessa Unified School District
- East Side Union High School District
- Milpitas Unified School District

Organizations, Companies, and Individuals

- Pacific Gas and Electric
- Union Pacific Railroad
- AT&T
- Adams, Broadwell, Joseph & Cardozo
- Milpitas Chamber of Commerce
- Jack Cooper Transportation Company

The Draft SEIR was also on file at City Hall and available for review at the Milpitas Community Library and on the City of Milpitas web site at www.ci.milpitas.ca.gov.

SECTION 2 LIST OF AGENCIES AND INDIVIDUALS COMMENTING ON THE DRAFT SEIR

Comment Received From		Date of Letter	Response on Page
State Agencies			
A.	Department of Transportation	August 27, 2008	7
B.	Department of Transportation	August 4, 2008	9
County and Regional Agencies			
C.	County of Santa Clara Roads and Airports Department	July 1, 2008	13
D.	Santa Clara Valley Transportation Authority	July 25, 2008	15
Companies			
E.	Pacific Gas & Electric (PG&E)	June 26, 2008	20

SECTION 3 RESPONSES TO COMMENTS RECEIVED ON THE DRAFT SEIR

The following section includes all of the comments requiring responses contained in letters received by the City of Milpitas during the noticed 45-day review period for this Draft SEIR. The comments are organized under headings containing the source of the letter and its date. The specific comments have been excerpted from the letters and are presented as "comment" with each response directly following. The original comment letter is included after the responses to its comments.

A. RESPONSES TO COMMENTS ON THE DRAFT SEIR FROM THE DEPARTMENT OF TRANSPORTATION DATED AUGUST 27, 2008

COMMENT A-1: Thank you for continuing to include the California Department of Transportation (Department) in the environmental review process for the proposed project. Upon further discussions with your public works staff and modifications to conceptual design plans, we have attached a corrected version of our original comment letter dated August 4, 2008 for your use. We are withdrawing the following comments:

"Traffic Safety

The proposed Carlo Street offramp would increase the amount of vehicles traveling through the intersection of Abel Street and Calaveras Boulevard. Furthermore, the proposed Carlo Street offramp is too close in proximity to the intersection; it is essentially part of the intersection, an unconventional five-legged intersection. These two points result in negative safety and operational impacts. Considering that the travel distance from Serra Way/Calaveras Boulevard to S. Main Street & Carlo Street via Serra Way is only about 300 feet longer than the proposed Carlo Street offramp, there is no substantial benefit in providing the proposed offramp to the Midtown Area."

The Department does agree with the proposal of eliminating the Carlo Street onramp.

We apologize for any inconvenience this may have caused.

RESPONSE A-1: Comment Noted

DEPARTMENT OF TRANSPORTATION
P. O. BOX 23660
OAKLAND, CA 94623-0660
PHONE (510) 286-5535
FAX (510) 286-5559
TTY 711

Flex your power!
Be energy efficient!

August 27, 2008

SCL-000-GEN
SCL000115
SCH2000092027

Mr. Sheldon Ah Sing
Planning Division
City of Milpitas
455 East Calaveras Blvd.
Milpitas, CA 95035

Dear Mr. Ah Sing:

Milpitas Midtown Specific Plan Transportation Update – Draft Supplemental Environmental Impact Report (DSEIR), Traffic Impact Analysis (TIA) and Technical Appendices (TA)

Thank you for continuing to include the California Department of Transportation (Department) in the environmental review process for the proposed project. Upon further discussions with your public works staff and modifications to conceptual design plans, we have attached a corrected version of our original comment letter dated August 4, 2008 for your use. We are withdrawing the following comments:

"Traffic Safety
The proposed Carlo Street offramp would increase the amount of vehicles traveling through the intersection of Abel Street and Calaveras Boulevard. Furthermore, the proposed Carlo Street offramp is too close in proximity to the intersection; it is essentially part of the intersection, an unconventional five-legged intersection. These two points result in negative safety and operational impacts. Considering that the travel distance from Serra Way/Calaveras Boulevard to S. Main Street & Carlo Street via Serra Way is only about 300 feet longer than the proposed Carlo Street offramp, there is no substantial benefit in providing the proposed offramp to the Midtown Area.

The Department does agree with the proposal of eliminating the Carlo Street onramp."

We apologize for any inconvenience this may have caused.

Should you require further information or have any questions regarding this letter, please call José L. Olveda of my staff at (510) 286-5535.

Sincerely,

Lisa Carboni

LISA CARBONI
District Branch Chief
Local Development – Intergovernmental Review

c: Scott Morgan (State Clearinghouse)

Attachment: Letter dated August 4, 2008

B. RESPONSES TO COMMENTS ON THE DRAFT SEIR FROM THE DEPARTMENT OF TRANSPORTATION DATED AUGUST 4, 2008

COMMENT B-1: 1. On page 24, Carlo Street Offramp Opening: The document states: "Although the proposed Carlo Street offramp would increase the amount of vehicles traveling through the intersection of Abel Street and Calaveras Boulevard, the offramp would not substantially affect this Intersection ... " However, Table 4, page 23, shows that this intersection would degrade from LOS E (No Project) to LOS F (Offramp Opening, Phase IT) in the PM peak how', therefore causing a significant impact.

RESPONSE B-1: The City agrees that the project as a whole will result in a significant impact during the PM peak hour at the intersection of Calaveras Boulevard/Abel Street.

The intent of the referenced text on page 24 of the SEIR is to emphasize that the cause of the significant impact is not the construction of the new offramp; it is actually the closure of the existing onramp.

COMMENT B-2: 2. Page 24, 4.16.4 - Mitigation: Mitigation for the Calaveras Boulevard / Abel Street intersection is stated in this section of the report as "Add one additional westbound left turn lane on Calaveras Boulevard ... " In 4.16.5 - Conclusion, the report states "this mitigation is not considered feasible ..." In Appendix B, Introduction, #3, the report stales: "Eliminate future construction of a second left turn lane from eastbound Calaveras Boulevard to northbound Abel Street." Is this the same mitigation or are these two separate mitigation measures that are being eliminated from this proposed project?

RESPONSE B-2: These are not the same mitigation measures. The referenced mitigation measure on page 24 of the SEIR is the mitigation identified for the project's significant impact at the intersection of Calaveras Boulevard/Abel Street (i.e., add a second **westbound** left turn from Calaveras Boulevard to Abel Street.). The referenced text in Appendix B of the SEIR is describing the proposed project (i.e., eliminate future construction of a second **eastbound** left turn lane from Calaveras Boulevard to Abel Street.).

COMMENT B-3: Page 35, 9.1 - Letter from Caltrans dated February 19, 2008, we stated: "The proposal to eliminate this second left turn lane should be removed from the Supplemental Environmental Impact Report." The response to our comment states: "1) eliminating the future construction of the second left turn lane would not result in a significant traffic impact (refer to Section 4.16 Transportation of this EIR)." However, as stated in comment # 1 above, this proposed project is causing a significant impact in the PM peak hour to the Calaveras Boulevard/Abel Street intersection. "2.) a second left turn lane IS not included in the traffic analysis prepared for Calaveras Boulevard Preliminary Study Report (PSR) in conjunction with Caltrans," As stated in your response, this is a preliminary document. Therefore, this PSR has not been finalized. In the Department's January 7, 2008 review and comments on the Traffic Operations Analysis Report for the Calaveras Widening project, the following comment was made: "Page 16, 4th paragraph, Queue Analysis: As stated in this paragraph, two eastbound left-turn lanes are required at the Calaveras Blvd./Abel St. intersection." This should be included as part of the proposed project.

RESPONSE B-3: Removal of the future construction of a second eastbound left turn from Calaveras Boulevard to northbound Abel Street is proposed because of significant impacts to the Wrigley Creek including water quality and riparian habitat impacts that result from the need of having to widen the existing box culvert underneath Calaveras Boulevard to fit the second eastbound left turn lane on Calaveras Boulevard. The impacts to Wrigley Creek from the proposed second eastbound left turn lane were not properly identified during the preparation of the original Midtown EIR, this is why the removal of the second eastbound left turn is proposed by the project. Finally, the addition of a second eastbound left turn lane at Calaveras Boulevard & Abel Street is in conflict with the long-term plan line for the widening of Calaveras Boulevard from Abbott Avenue to Town Center Drive that was previously reviewed by the State of California – Department of Transportation. Although the Project Study Report for the long-term widening of Calaveras Boulevard is not yet finalized, the roadway alignment for Calaveras Boulevard in that project is completed.

The closing the Carlo St on-ramp to allow for conversion to an off ramp causes the significant and unavoidable impact to Calaveras Boulevard & Abel Street not eliminating the second eastbound left turn, please refer to Response B-1.

DEPARTMENT OF TRANSPORTATION
P. O. BOX 23660
OAKLAND, CA 94623-0660
PHONE (510) 286-5535
FAX (510) 286-5559
TTY 711

Flex your power!
Be energy efficient!

August 4, 2008

SCL-000-GEN
SCL000115
SCH2000092027

Mr. Sheldon Ah Sing
Planning Division
City of Milpitas
455 East Calaveras Blvd.
Milpitas, CA 95035

Dear Mr. Ah Sing:

Milpitas Midtown Specific Plan Transportation Update – Draft Supplemental Environmental Impact Report (DSEIR), Traffic Impact Analysis (TIA) and Technical Appendices (TA)

Thank you for continuing to include the California Department of Transportation (Department) in the environmental review process for the proposed project. We have reviewed the subject documents and have the following comments to offer.

Highway Operations

1. On page 24, Carlo Street Offramp Opening: The document states: "Although the proposed Carlo Street offramp would increase the amount of vehicles traveling through the intersection of Abel Street and Calaveras Boulevard, the offramp would not substantially affect this intersection…" However, Table 4, page 23, shows that this intersection would degrade from LOS E (No Project) to LOS F (Offramp Opening, Phase II) in the PM peak hour, therefore causing a significant impact.

2. Page 24, 4.16.4 - Mitigation: Mitigation for the Calaveras Boulevard / Abel Street intersection is stated in this section of the report as "Add one additional westbound left turn lane on Calaveras Boulevard …" In 4.16.5 - Conclusion, the report states "this mitigation is not considered feasible..." In Appendix B, Introduction, #3, the report states: "Eliminate future construction of a second left turn lane from eastbound Calaveras Boulevard to northbound Abel Street." Is this the same mitigation or are these two separate mitigation measures that are being eliminated from this proposed project?

3. Page 35, 9.1 - Letter from Caltrans dated February 19, 2008, we stated: "The proposal to eliminate this second left turn lane should be removed from the Supplemental Environmental Impact Report." The response to our comment states: "1) eliminating the future construction of the second left turn lane would not result in a significant traffic impact (refer to Section 4.16 Transportation of this EIR)." However, as stated in comment # 1 above, this proposed project is causing a significant impact in the PM peak hour to the Calaveras Boulevard /Abel

Street intersection. "2.) a second left turn lane is not included in the traffic analysis prepared for Calaveras Boulevard Preliminary Study Report (PSR) in conjunction with Caltrans." As stated in your response, this is a preliminary document. Therefore, this PSR has not been finalized. In the Department's January 7, 2008 review and comments on the Traffic Operations Analysis Report for the Calaveras Widening project, the following comment was made: "Page 16, 4th paragraph, Queue Analysis: As stated in this paragraph, two eastbound left-turn lanes are required at the Calaveras Blvd./Abel St. intersection." This should be included as part of the proposed project.

Should you require further information or have any questions regarding this letter, please call José L. Olveda of my staff at (510) 286-5535.

Sincerely,

Lisa Carboni

LISA CARBONI
District Branch Chief
Local Development – Intergovernmental Review

c: Scott Morgan (State Clearinghouse)

C. RESPONSES TO COMMENTS ON THE DRAFT SEIR FROM THE COUNTY OF SANTA CLARA ROADS AND AIRPORT DEPARTMENT DATED JULY 1, 2008

COMMENT C-1: Provide Montague at Main, Montague at O'tool, Montague at Trade Zone, and Montague at Capitol in the Traffic Impact Analysis to evaluate traffic impact and the required mitigation to Montague Expressway.

RESPONSE C-1: No trips would be added or redistributed onto Montague Expressway as a result of the proposed project because there are no proposed land use changes from that assumed in the original Midtown EIR so that traffic analysis scope used in the original Midtown EIR is being used in the proposed project.

County of Santa Clara
Roads and Airports Department

101 Skyport Drive
San Jose, California 95110-1302
(408) 573-2400

July 1, 2008

Planning Division
City of Milpitas
455 East Calaveras Blvd.
Milpitas, CA 95035

Subject: Draft SEIR Milpitas Midtown Specific Plan

Attn: Sheldon S. Ah Sing, Senior Planner
State Clearinghouse #2000092027

Dear Sheldon:

This is in response to your June 2008 Draft SEIR regarding the subject project.

The review is complete and we have the following comments:

1. Provide Montague at Main, Montague at O'tool, Montague at Trade Zone, and Montague at Capitol in the Traffic Impact Analysis to evaluate traffic impact and the required mitigation to Montague Expressway.

Please incorporate above comments and resubmit for review. If you have any questions concerning the above, please contact me at (408) 573-2463.

Sincerely,

William K. Y. Yeung

William Yeung
Associate Civil Engineer
Land Development

Board of Supervisors: Donald F. Gage, Blanca Alvarado, Pete McHugh, Ken Yeager, Liz Kniss
County Executive: Peter Kutras, Jr.

7-007

D. RESPONSES TO COMMENTS ON THE DRAFT SEIR FROM THE SANTA CLARA VALLEY TRANSPORTATION AUTHORITY DATED JUNE 16, 2008

COMMENT D-1: Bus Service

VTA provides bus service along Main Street within the project area. In order to provide convenient access to transit service, VTA staff recommends that the project maintain the bus stop on southbound Main Street, south of Great Mall Parkway, and provide the following improvements:

- A 10' X 55' PCC pavement pad per VTA standards (attached).
- An 8' X 10' passenger waiting zone.
- No trees or shrubs within the bus loading area.

RESPONSE D-1: The existing VTA bus stop on southbound Main Street just south of Great Mall Parkway will be maintained. The project proposes restriping and minor median island modification work on this section of Main Street. The opportunity to request bus pad construction was during the preparation of off-site improvements for the Centria project. This request did not occur and,therefore, the City and the VTA missed the opportunity to request a bus pad at this bus stop.

The City did require the Centria project to provide a bus shelter at this bus stop and it will be installed as part of their off-site improvements, which also include new decorative sidewalks, street trees and streetlighting. Construction of these improvements will commence in August 2008.

COMMENT D-2: Impacts to Transit Service

The environmental document states that the project's transit impacts would be less than significant since the "project would not change the demand for transit facilities, modify transit stops, nor modify routes for buses in the Midtown area" (page 25). However, it should be noted that there could be delays to bus service during peak hours due to the significant adverse traffic impacts noted in the environmental document.

RESPONSE D-2: The comment is noted. The comment does not change the conclusions of the SEIR. For these reasons, revisions to the SEIR text are not necessary.

SANTA CLARA
Valley Transportation Authority

July 25, 2008

City of Milpitas
Planning Division
455 East Calaveras Boulevard
Milpitas, CA 95035-5479

Attention: Sheldon Ah Sing

Subject: Milpitas Midtown Specific Plan Transportation Update

Dear Mr. Sing:

Santa Clara Valley Transportation Authority (VTA) staff have reviewed the Supplemental Draft EIR for the Midtown Specific Plan Transportation Plan Update for the area bounded by Trade Zone Boulevard, S. Main Street, I-880 and Abel Street. We have the following comments.

Bus Service

VTA provides bus service along Main Street within the project area. In order to provide convenient access to transit service, VTA staff recommends that the project maintain the bus stop on southbound Main Street, south of Great Mall Parkway, and provide the following improvements:

- A 10' X 55' PCC pavement pad per VTA standards (attached).
- An 8' X 10' passenger waiting zone.
- No trees or shrubs within the bus loading area.

Impacts to Transit Service

The environmental document states that the project's transit impacts would be less than significant since the "project would not change the demand for transit facilities, modify transit stops, nor modify routes for buses in the Midtown area" (page 25). However, it should be noted that there could be delays to bus service during peak hours due to the significant adverse traffic impacts noted in the environmental document.

Thank you for the opportunity to review this project. If you have any questions, please call me at (408) 321-5784.

Sincerely,

Roy Molseed
Senior Environmental Planner

RM:kh

cc: Samantha Swan, VTA

ML0102

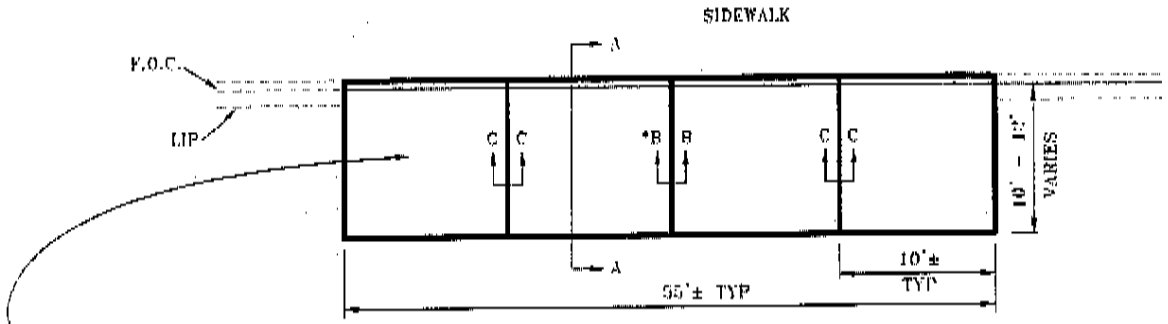

SAWCUT AND EXCAVATE EXISTING PAVEMENT, INCLUDING CURB & GUTTER. REPLACE WITH P.C.C. PAVEMENT SECTION AND MONOLITHIC CURB.

PLAN VIEW

*EXPANSION JOINT SHALL BE PLACED AT 1/2 THE LENGTH OF THE P.C.C. PAD.
IN LONG PADS, EXPANSION JOINTS SHALL BE PLACED AT APPROXIMATELY 50 FOOT INTERVALS OR AS SPECIFIED BY THE ENGINEER.

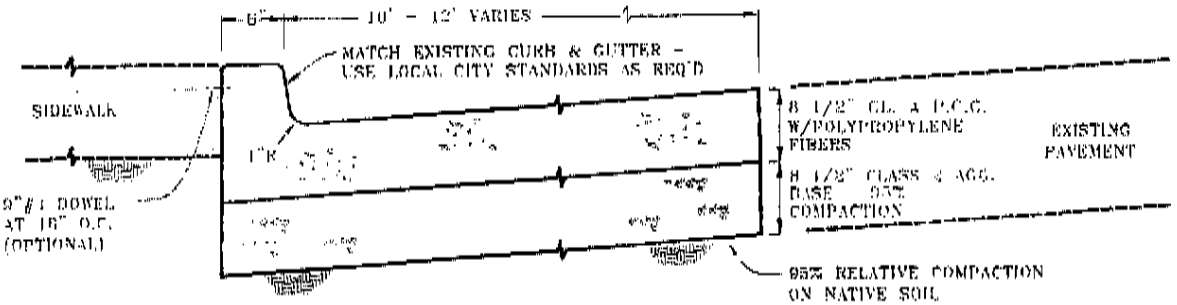

SECTION A-A

PCC PAVEMENT WITH MONOLITHIC CURB

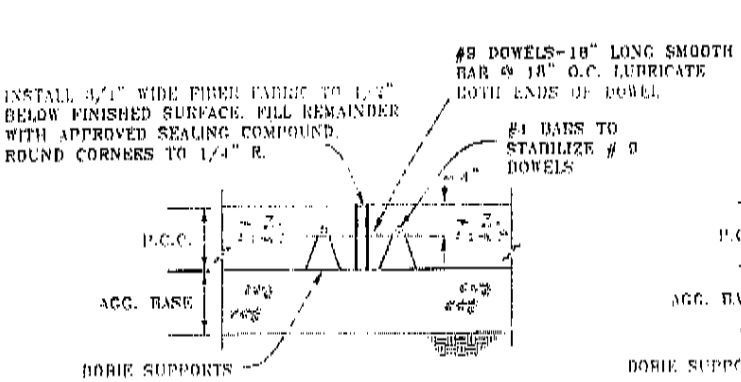

SECTION B-B

EXPANSION JOINT

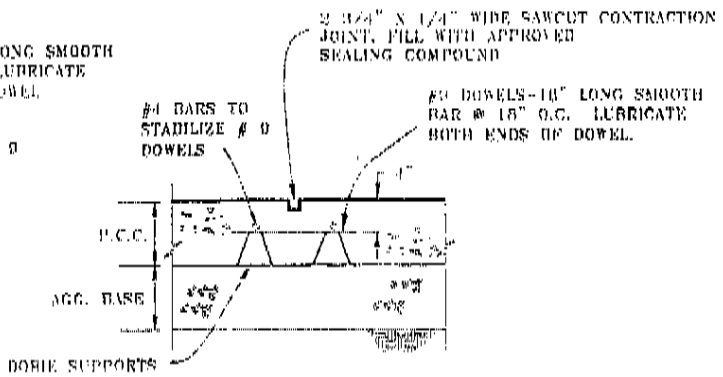

SECTION C-C

CONTRACTION JOINT

NOTE: FOR TECHNICAL SPECIFICATIONS REFER TO ATTACHMENT 1.

SANTA CLARA VALLEY TRANSPORTATION AUTHORITY

BUS STOP PAVEMENT DETAILS

FIGURE 26

TECHNICAL SPECIFICATIONS

1. P.C.C. pavement with monolithic curb and gutter shall conform to the provisions in Section 40, " PORTLAND CEMENT CONCRETE PAVEMENT," and Section 90, " PORTLAND CEMENT CONCRETE" of the State Standard Specifications and these special provisions.

2. P.C.C. pavement shall be class A with a flexural strength of 650 psi at the age of 28 days to be determined by Test Method ASTM C78. Polypropylene fibers (Fibermesh or approved equal), length 1/2", shall be added to the concrete at a rate of 1 1/2 lbs/cy.

3. After spreading and compacting, P.C.C. concrete shall be given a preliminary finish , which shall be smooth and true to grade. In advance of curing operations, the pavement shall be given a final rough broom finish with grooves having a depth of 1/8" perpendicular to the curb and gutter.

4. All newly - placed concrete shall be cured in accordance with the provisions in Section 90-7, "Curing Concrete," of the State Standard Specifications. Curing compound to be used shall be applied to the P.C.C. following the surface finishing operations immediately before the moisture sheen disappears from the surface and before any drying, shrinkage or craze cracks begin to appear. Curing compound shall be applied at a nominal rate of one gallon per 150 square feet. At any point, the application rate shall be within +/- 50 square feet per gallon of the nominal rate specified.

5. Sawcutting of the contraction joints must be performed within 24 hours after concrete has received final surface finish.

6. Contractor shall protect P.C.C. Pad as specified in Section 90-8.03, " Protecting Concrete Pavement." Where public traffic will be required to cross over new pavement, and if directed by the Engineer, Type III Portland Cement shall be used in concrete. When Type III Portland Cement is used in concrete, and if permitted in writing by the Engineer, the pavement may be opened to traffic as soon as the concrete has developed a modulus of rupture of 550 pounds per square inch. The modulus of rupture will be determined by Test Method ASTM C78.

   No traffic or Contractor's equipment, except as hereinafter provided, will be permitted on the pavement before a period of ten (10) calendar days has elapsed after the concrete has been placed, nor before the concrete has developed a modulus of rupture of at least 550 pounds per square inch. Concrete that fails to attain a modulus of rupture of 550 pounds per square inch within 10 days shall not be opened to traffic until directed by the Engineer.

   Equipment for sawing contraction joints (weakened plane joints) will be permitted on the pavement as specified in Section 40-1.08B, "Weakened Plane Joints," of the State Standard Specifications.

7. Contraction joints, expansion joints and gaps between the P.C.C. pad and the existing pavement section shall be cleaned and sealed prior to permitting traffic on the pad. Joint sealing compound shall be type "A" joint seal and shall conform to the provisions of Section 51-1.12F of the State Standard Specifications. The 2 component polyurethane sealant shall be State Specification 8030 - 61J - 01 or approved equal.

SANTA CLARA VALLEY TRANSPORTATION AUTHORITY

BUS STOP PAVEMENT DETAILS

ATTACHMENT 1 FOR FIGURE 26

E. RESPONSES TO COMMENTS ON THE DRAFT SEIR FROM PACIFIC GAS & ELECTRIC (PG&E) DATED JUNE 26, 2008

COMMENT E-1: PG&E owns and operates gas and electric facilities which are located within and adjacent to the proposed project. To promote the safe and reliable maintenance and operation of utility facilities, the California Public Utilities Commission (CPUC) has mandated specific clearance requirements between utility facilities and surrounding objects or construction activities. To ensure compliance with these standards, project proponents should coordinate with PG&E early in the development of their project plans. Any proposed development plans should provide for unrestricted utility access and prevent easement encroachments that might impair the safe and reliable maintenance and operation of PG&E's facilities.

RESPONSE E-1: The comment is noted. The comment does not raise any issues regarding the adequacy of the SEIR. The project will adhere to the CPUC mandated specific clearance requirements. The project will coordinate with PG&E, as necessary.

COMMENT E-2: The developers will be responsible for the costs associated with the relocation of existing PG&E facilities to accommodate their proposed development. Because facilities relocation's require long lead times and are not always feasible, the developers should be encouraged to consult with PG&E as early in their planning stages as possible.

RESPONSE E-2: The comment is noted. The comment does not raise any issues regarding the adequacy of the SEIR. The project will coordinate with PG&E, as necessary.

COMMENT E-3: Relocations of PG&E's electric transmission and substation facilities (50,000 volts and above) could also require formal approval from the California Public Utilities Commission. If required, this approval process could take up to two years to complete. Proponents with development plans which could affect such electric transmission facilities should be referred to PG&E for additional information and assistance in the development of their project schedules.

RESPONSE E-3: The comment is noted. The project would not relocate electric transmission and substation facilities (50,000 volts and above).

COMMENT E-4: We would also like to note that continued development consistent with the City's General Plans will have a cumulative impact on PG&E's gas and electric systems and may require on-site and off-site additions and improvements to the facilities which supply these services. Because utility facilities are operated as an integrated system, the presence of an existing gas or electric transmission or distribution facility does not necessarily mean the facility has capacity to connect new loads.

Expansion of distribution and transmission lines and related facilities is a necessary consequence of growth and development. In addition to adding new distribution feeders, the range of electric system improvements needed to accommodate growth may include upgrading existing substation and transmission line equipment, expanding existing substations to their ultimate buildout capacity, and building new substations and interconnecting transmission lines. Comparable upgrades or additions needed to accommodate additional load on the gas system could include facilities such as regulator stations, odorizer stations, valve lots, and distribution and transmission lines.

It is recommended that environmental documents for proposed development projects include adequate evaluation of cumulative impacts of utility systems, the utility facilities necessary to serve those developments and any potential environmental issues associated with extending utility service to the proposed project. This will assure the project's compliance with CEQA and reduce potential delays to the project schedule.

RESPONSE E-4: The comment is noted. The project proposes changes to the existing and planned roadway system within the Milpitas Midtown Area. The project would not increase demand upon PG&E's gas and electric systems. For this reason, the project would not result in cumulative impacts upon public services, such as PG&E's gas and electric systems.

COMMENT E-5: PG&E remains committed to working with the City to provide timely, reliable and cost effective gas and electric service to the planned area. We would also appreciate being copied on future correspondence regarding this subject as this project develops.

RESPONSE E-5: PG&E will be sent a copy of this Final EIR.

COMMENT E-6: The California Constitution vests in the California Public Utilities Commission (CPUC) exclusive power and sole authority with respect to the regulation of privately owned or investor owned public utilities such as PG&E. This exclusive power extends to all aspects of the location, design, construction, maintenance and operation of public utility facilities. Nevertheless, the CPUC has provisions for regulated utilities to work closely with local governments and give due consideration to their concerns. PG&E must balance our commitment to provide due consideration to local concerns with our obligation to provide the public with a safe, reliable, cost-effective energy supply in compliance with the rules and tariffs of the CPUC.

RESPONSE E-6: The comment is noted. The comment does not raise any issues regarding the adequacy of the SEIR. No further response is necessary.

PG&E Land Services, 111 Almaden Blvd., Rm. 814, San Jose, CA 95115

June 26, 2008

City of Milpitas
Planning Department
455 E Calaveras Blvd.
Milpitas, CA 95035
Attn: Sheldon Ah Sing
Fax: 408-586-3293
Email: sahsing@ci.milpitas.ca.gov

RE: Review of Draft Supplemental Environmental Impact Report (SEIR) June 2008
For: Milpitas Midtown Specific Plan Transportation Update
Loc: bounded by UPRR lines on the east; Trade Zone Blvd. on the south, Main St. on the west, and Abel St. on the north
City's Ref: Nil
PG&E File : SJ 129 (Land)

Dear Sir / Madam,

Thank you for this opportunity to comment on this Draft Supplemental Environmental Impact Report (SEIR) for the above Project. PG&E has the following comments to offer:

PG&E owns and operates gas and electric facilities which are located within and adjacent to the proposed project. To promote the safe and reliable maintenance and operation of utility facilities, the California Public Utilities Commission (CPUC) has mandated specific clearance requirements between utility facilities and surrounding objects or construction activities. To ensure compliance with these standards, project proponents should coordinate with PG&E early in the development of their project plans. Any proposed development plans should provide for unrestricted utility access and prevent easement encroachments that might impair the safe and reliable maintenance and operation of PG&E's facilities.

The developers will be responsible for the costs associated with the relocation of existing PG&E facilities to accommodate their proposed development. Because facilities relocation's require long lead times and are not always feasible, the developers should be encouraged to consult with PG&E as early in their planning stages as possible.

Relocations of PG&E's electric transmission and substation facilities (50,000 volts and above) could also require formal approval from the California Public Utilities Commission. If required, this approval process could take up to two years to complete. Proponents with development plans which could affect such electric transmission facilities should be referred to PG&E for additional information and assistance in the development of their project schedules.

We would also like to note that continued development consistent with the City's General Plans will have a cumulative impact on PG&E's gas and electric systems and may require on-site and off-site additions and improvements to the facilities which supply these services. Because utility facilities are operated as an integrated system, the presence of an existing gas or electric transmission or distribution facility does not necessarily mean the facility has capacity to connect new loads.

Expansion of distribution and transmission lines and related facilities is a necessary consequence of growth and development. In addition to adding new distribution feeders, the range of electric system improvements needed to accommodate growth may include upgrading existing substation and transmission line equipment, expanding existing substations to their ultimate buildout capacity, and building new substations and interconnecting transmission lines. Comparable upgrades or additions needed to accommodate additional load on the gas system could include facilities such as regulator stations, odorizer stations, valve lots, distribution and transmission lines.

It is recommended that environmental documents for proposed development projects include adequate evaluation of cumulative impacts of utility systems, the utility facilities necessary to serve those developments and any potential environmental issues associated with extending utility service to the proposed project. This will assure the project's compliance with CEQA and reduce potential delays to the project schedule.

PG&E remains committed to working with the City to provide timely, reliable and cost effective gas and electric service to the planned area. We would also appreciate being copied on future correspondence regarding this subject as this project develops.

The California Constitution vests in the California Public Utilities Commission (CPUC) exclusive power and sole authority with respect to the regulation of privately owned or investor owned public utilities such as PG&E. This exclusive power extends to all aspects of the location, design, construction, maintenance and operation of public utility facilities. Nevertheless, the CPUC has provisions for regulated utilities to work closely with local governments and give due consideration to their concerns. PG&E must balance our commitment to provide due consideration to local concerns with our obligation to provide the public with a safe, reliable, cost-effective energy supply in compliance with the rules and tariffs of the CPUC.

Should you require any additional information or have any questions, please call me at (408) 282-7544.

Sincerely,

Alfred Poon
Land Rights Protection
Southern Area