ATTACHMENT F

Stormwater Control Plan

TRAVERSE

MILPITAS, CALIFORNIA

For
Stormwater C.3 Guideline Compliance
with
Traverse
Vesting Tentative Map

April 1, 2013

Prepared By:

Carlson, Barbee & Gibson, Inc.
CIVIL ENGINEERS • SURVEYORS • PLANNERS

6111 BOLLINGER CANYON ROAD, SUITE 150 • SAN RAMON, CA 94583 • (925) 866-0322 • FAX (925) 866-8575 •www.cbandg.com

TABLE OF CONTENTS

I. PROJECT SETTING 1

A. Project Description 1
B. Site Features and Conditions 1
C. Opportunities and Constraints for Stormwater Control 2
D. Hydromodification Management Requirements 3

II. MEASURES TO LIMIT IMPERVIOUSNESS 4

A. Measures to Cluster Development and Protect Natural Resources 4
B. Measures to Limit Directly Connected Impervious Areas 4
C. Selection of Paving Materials 4

III. SELECTION AND DESIGN OF STORMWATER TREATMENT BMP'S 5

A. Hydrology 5
B. Recommended Permanent BMP's 5

IV. SOURCE CONTROL MEASURES 10

A. Permanent Source Control BMP's 10
B. Operational Source Control BMP's 10

V. PERMITTING AND CODE COMPLIANCE ISSUES 11

VI. BMP MAINTENANCE REQUIREMENTS 12

A. Recommended BMP Maintenance 12

VII. SUMMARY FORMS 14

A. Construction Plan C.3 Checklist 14
B. C.3 Data Form 15

VIII. CERTIFICATION 16

TABLE OF CONTENTS

TABLES

Table 1	Site Data
Table 2	C.3 Runoff Coefficients -"C' Value
Table 3	Preliminary BMP Sizing
Table 4	BMP Sizing – TreePod Biofilters

FIGURES

Figure 1	Vicinity Map
Figure 2	Aerial Photo
Figure 3	Existing Conditions
Figure 4	Proposed Conditions
Figure 5	Bioretention Planters & Infiltration Patio Areas
Figure 6	Landscape Treatment Areas
Figure 7	Roadway Infiltration Areas
Figure 8	Biofiltration Tree Filters
Figure 9	Bioretention Planter Detail
Figure 10	Infiltration Patio Detail
Figure 11	Pervious Gutter Detail
Figure 12	Pervious Valley Gutter Detail

APPENDIX

Appendix A	Kristar Device Details
Appendix B	CASQA-BMP Handbook Fact Sheets

I. PROJECT SETTING

A. Project Description

This Stormwater Control Plan (SWCP) for Traverse (Project) is submitted to the City of Milpitas as an accompaniment to the Traverse Vesting Tentative Map. The SWCP provides recommendations on the use of permanent Best Management Practices (BMP) for the proposed project. Probable design storm flows and permanent BMP selection are presented in this report. BMP technical requirements are presented in the Stormwater C.3 Guidebook 3rd edition adopted by the City of Milpitas on October 6, 2005.

The Traverse project site is located north of Trade Zone Blvd between Montague Expressway and Lundy Ave. Trade Zone Blvd. borders the site to the south. On the north and east, the project is bordered by existing industrial buildings. The approved development project currently called Pace and the proposed borders the project site to the west. The project site is shown in Figure 1. An aerial of the site is provided in Figure 2. The improvements to the 12.5± acre site will include 29 multi-story buildings, public and private roadways, a public park, private common areas, and landscaped paseos.

B. Site Features and Conditions

Existing Conditions

The existing site is located in an area currently used for industrial purposes and contains several small buildings and associated hardscape. Elevations range from approximately 45 feet near the southeast corner of the site and to approximately 37 feet at the northwestern-most corner of the site. The existing buildings, paving, concrete, and other impervious surfaces account for approximately 24% (3 ac) of the site. The remaining 76% of the site are pervious surfaces consisting of minimal landscaped areas along Trade Zone Blvd. frontage and large dirt lots. All existing surface improvements will be demolished as part of the project.

The existing surface type and corresponding areas are shown in Table 1 and the existing conditions and storm drain lines are identified in Figure 3.

Proposed Conditions

The SWCP has studied and designed the BMP's for the ultimate improvements. Upon construction of the proposed improvements, approximately 8.3 acres (66%) of the site will be covered by impervious surface and about 4.2 acres (34%) will be covered by landscaped areas including lawns, shrubs, and trees. All walkways within these areas will be sloped to drain onto the surrounding landscaping. The Proposed Conditions are shown in Figure 4.

The proposed surface type and corresponding areas are shown in Table 2 and the proposed conditions and storm drain lines are identified in Figure 4.

The proposed on-site drainage system will consist of five principle drainage areas:

- *Drainage Area 'A'* – Approximately 0.8 acres on Trade Zone Blvd. will discharge into the existing storm drain line in Trade Zone Blvd. This area will be treated through biofiltration tree filters.

- *Drainage Area 'B'* – Approximately 0.3 acres on the western frontage. This portion of roadway associated with this project will be an extension of the proposed Momentum Drive roadway to be constructed with the Pace project. This drainage area will be treated through the biofiltration tree filters that will be installed with the Pace project.

- *Drainage Area 'C'* – Approximately 0.8 acres on the eastern frontage will be a new public road. An existing storm drain line along this frontage. This roadway drainage will be directed to several biofiltration tree filters which will be connected to this system.

- *Drainage Area 'D'* – Approximately 6.4 acres of the northern portion of the site will discharge into the existing storm drain system at the northwest corner of the site. This drainage will be treated through a variety of measures onsite.

- *Drainage Area 'E'* – Approximately 4.2 acres of the southern portion of the site will discharge into the existing storm drain system at the northwest corner of the site. This drainage will be treated through a variety of measures onsite.

The proposed on-site storm drainage system improvements for the site will tie into several existing storm drain systems as shown in Figure 4.

C. Opportunities and Constraints for Stormwater Control

Opportunities

- *Landscape Areas* – Landscape areas in front and sides of the buildings provide and opportunity for treatment through bioretention/biofiltration planters. These planters provide an opportunity to collect and treat adjacent roof areas. These planters will be incorporated into the landscape design to provide appropriate vegetation and treatment.
- *Self-Treating/Self-Retaining Areas* – Landscape areas adjacent to sidewalks and other impervious areas provide a treatment option. Drainage from sidewalks that is directed to landscape areas provide treatment options for evapotranspiration and infiltration.
- *Building Patios* – Throughout the project, private patios have been proposed that provide owners with a outdoor space. These patios provide an opportunity for dual-use as an outdoor living space and a treatment option.
- *Existing Storm Drain System* – The existing storm drain system allows the use of structural BMP units to be used for water treatment. The units will be placed at

the downstream end of each sub-system, before discharging into the public main. Both BMP units will be sized only to treat the on-site runoff from the proposed project and the respective sub-watersheds.

Constraints

- *High Density Land Use* – The site will be largely covered by rooftops and paving with limited open space for use of storm water control and site aesthetics (i.e. landscaping).
- *Existing Site* – The existing topography and utility improvements make use of open space areas for stormwater treatment difficult.
- *Existing Streets* – In combination of the existing topography, the existing Momentum Drive and Trade Zone Blvd. limit the storm water treatment options.

D. Hydromodification Management Requirements

The project site is within the area defined as greater than 65% imperviousness and greater than 90% build-out as shown on the Areas of Applicability Map (Attachment B, Appendix P) of the Milpitas Stormwater C.3 Guidebook. Projects in this area are exempt from the Hydromodification Management Plan requirements.

II. MEASURES TO LIMIT IMPERVIOUSNESS

A. Measures to Cluster Development and Protect Natural Resources

The proposed project was planned with water quality treatment goals at the forefront. Every effort will be made to minimize impervious surfaces and redirect runoff to less pervious surfaces. The Stormwater Control Plan has identified the following design strategies which will aid in achieving these goals.

- The site incorporates 206 residential units into 29 multi-story buildings with two car garages for each unit. This limits the amount of impervious area that may otherwise be found with on-street parking spaces. Surface parking is provided as necessary to meet City Requirement's without providing excess impervious surface.
- A minimum of two buildings share one alley driveway.
- Continuous landscape corridors promote pedestrian access throughout the project.
- Minimal width sidewalks provide pedestrian access while maximizing pervious landscape areas.

B. Measures to Limit Directly Connected Impervious Areas

The proposed site layout and building locations offer the possibility of directing stormwater runoff to proposed landscape areas.

Approximately 3.5 acres (28%) of the proposed project will be covered by landscaped or pervious surfaces which include lawn, shrubs, and trees.

- The project shall be designed to direct runoff from impervious surfaces into landscape areas or a drainage treatment feature where possible, i.e. Bioretention Planters.
- Pedestrian pathways within the landscape areas such as the paseos shall be sloped to drain towards adjacent landscape areas, i.e. Self-Retaining Areas,

C. Selection of Paving Materials

Conventional concrete and asphalt have been selected for use throughout this site.

Where possible, pervious surfaces will be used. These may include: pervious concrete, pervious concrete gutters & valley gutters, pavers, etc.

III. SELECTION AND DESIGN OF STORMWATER TREATMENT BMP'S

A. Hydrology

Runoff coefficients for existing and proposed on-site conditions were based on the Santa Clara Valley Urban Runoff Pollution Prevention Program (SCVURPPP), See Table 2. The City of Milpitas Land Development Engineering Manual values were not surface type specific and therefore not used.

A rainfall intensity value of *0.2 inches per hour* is used for treatment flows based on the City of Milpitas Stormwater C.3 Guidebook. The weighted runoff coefficient was based on the percentage of the impervious or pervious area for all area classifications in the tributary drainage area.

B. Recommended Permanent BMP's

This SWCP has identified a combination of bioretention, Figure 5 (landscape planters), infiltration, Figure 5 & 7 (pervious gutter pans, pervious valley gutters, pervious concrete), landscape treatment, Figure 6 (self-treating, self-retaining) and Media Filtration, Figure 8 as the best methods to fulfill on-site treatment requirements. The drainage areas to be treated by each method are shown in Figures 5, 6, 7 and 8 as indicated above. These BMP's will provide a level of treatment that meets the C.3 requirements for the runoff generated by the project improvements:

- Selected landscaping areas can be used as bioretention BMP's. Where applicable, adjacent roof runoff will be directed to landscape areas. Figure 5 identifies potential landscape areas that may be used for bioretention (exact locations to be determined with the final design and SWCP). Figure 9 is a typical bioretention detail.
- Patio areas can be used for infiltration storage BMP's. Where applicable, adjacent roof runoff will be directed to infiltration areas under the patios. Figure 5 identifies potential patios that may be used for infiltration (exact locations to be determined with the final design and SWCP). Figure 10 is a typical bioretention detail.
- Private Street stormwater will be treated through infiltration under the proposed gutter pan. The street and monolithic sidewalk drainage will flow through the pervious gutter and into an infiltration storage area. A subdrain will be placed at the top of the storage area to direct the overlow to the nearest catch basin and into the storm drain system. See Figure 7 for proposed roadway infiltration areas. The final locations will be determined with the final design. Figure 11 shows the typical detail for the pervious gutter.
- Stormwater from the private alleys and building drainage will be treated through infiltration under the proposed valley gutter in the center of the alley. The drainage will flow through the pervious concrete and into an infiltration storage area. A subdrain will be placed at the top of the storage area to direct the overlow to the nearest catch basin and into the storm drain system. See Figure 7 for

proposed drainage areas to be treated in the previous valley gutter. The final locations will be determined with the final design. Figure 12 shows the typical detail for the pervious valley gutter.

- Site sidewalks and detached street sidewalks will be directed to landscape areas for treatment. These landscape areas are qualified as Self-Retaining Treatment. Figure 6 indicates the Self-Treating and Self-Retaining areas and the sidewalks that are treated in these landscape areas.
- For treatment for the Public Streets, bioretention tree filters will be used for treatment of the storm drain runoff. These filters have been implemented on the Existing portion of Momentum Drive. Drainage will flow into these filters for treatment and discharge into the existing storm drain system. See Figures 8 the filter locations, treatment areas and existing storm drain connections. Appendix B provided for details for these devices.

Maintenance procedures for the recommended BMP's are outlined in Section VI, BMP Maintenance Requirements.

BioRetention

BioRetention treatment areas are designed to filter pollutants from stormwater runoff from adjacent roof areas, streets, and alleys (see Figure 5). These features include stormwater planters (see Figure 9). These features use a varied combination of vegetated buffers, ponding areas, permeable planting soils, infiltration materials and subdrain systems. Stormwater planters will collect and treat building roof areas as shown on Figure 5. Once the water infiltrates through the infiltration trench, it will be collected in the main public storm drain system.

The sizing of the bioretention treatment areas will be done to maximize treatment for tributary areas. Runoff that is directed into the bioretention area will infiltrate through a specified infiltration mixture. The infiltration material to be used within the treatment areas must have a minimum infiltration rate of 5 inches per hour to meet the specification described in Appendix C of the Santa Clara Valley Urban Runoff Pollution Prevention Program (SCVURPPP) C.3 Stormwater Handbook.

Infiltration

Infiltration is the preferred method of Stormwater Treatment as identified by SCVURPPP. Infiltration is designed to filter pollutants from stormwater runoff from impervious areas through infiltration of the drainage through the native soils. The project will have several infiltration methods: pervious gutters, pervious valley gutters, and infiltration patios. Each system will require a overflow drain at the top of the infiltration area to collect and direct drainage over the required treatment volume into the storm drain system.

Bioretention Tree Filters

Media filtration typically includes a two chambered structure that provides one chamber for pretreatment for the separation of large debris and a second chamber which houses a series of cartridges with absorptive filtration media.

For drainage areas where connection to bioretention planers or landscaping is not available, Bioretention Tree Filters will provide the required treatment. The filters will provide treatment for drainage from street pavement and monolithic sidewalks in the Public Roadways. (See Figures 8).

The Kristar TreePod Biofilters are sized using the flow based Uniform Intensity Method which utilizes a treatment intensity of 0.2 in/hr. Each designated drainage area will result in an individual treatment flow to which the appropriate structure will be sized. These structures will be sized with the final design as part of the Improvement Plans and Final SWCP. Each unit is equipped with a high capacity bypass system that allows excess stormwater flows to be passed through the system to prevent upstream ponding.

Drainage Areas

Proposed Drainage Area 'A'

Proposed Drainage Area 'A' includes approximately 0.8 acres of Trade Zone Blvd. This drainage area will be treated by a single TreePod Biofilter place at the west end of the project frontage.

- Kristar TreePod Biofilter (as shown in Figures 8)

Proposed Drainage Area 'B'

Proposed Drainage Area 'B' includes approximately 0.3 acres of roadway widening for Momentum Drive. The existing street slopes towards the west curb where drainage is collected in TreePod Biofilter. These existing filters will collect and treat the additional drainage.

- Existing Kristar Kristar TreePod Biofilter (as shown in Figures 8)

Proposed Drainage Area 'C'

Proposed Drainage Area 'C' includes approximately 0.8 acres of public roadway and monolithic sidewalk. This drainage area will be treated by two Bioretention Tree Filters placed on the eastside of the street.

- Kristar TreePod Biofilter (as shown in Figures 8)

Proposed Drainage Area 'D'

Proposed Drainage Area 'D' includes approximately 6.4 acres of private roadway, alleys, sidewalk, landscaping and buildings. This drainage area will be treated by a wide variety of methods. Self-treating and Self-retaining areas will treat the landscape and site and detached sidewalks. Building runoff that is directed to the paseos will be treated through a combination of infiltration patios and landscape planters. Private roadways, alleys and roof runoff directed to the alleys will be treated by pervious gutters in the streets pervious valley gutters in the alleys.

- Stormwater Planters – Buildings 1-13 and 26-29 (as shown in Figure 5)
- Pervious Concrete Gutter Infiltration – Street E (see Figure 7)
- Pervious Concrete Valley Gutter Infiltration – Alleys (see Figure 7)
- Self-Treating & Self-Retaining Landscape Areas (see Figure 6)
- TreePod Biofilters - Public Streets A and B (see Figure 8)

Proposed Drainage Area 'E'

Proposed Drainage Area 'E' includes approximately 4.2 acres of private roadway, alleys, sidewalk, landscaping and buildings. This drainage area will be treated by a wide variety of methods. Self-treating and Self-retaining areas will treat the landscape and site and detached sidewalks. Building runoff that is directed to the paseos will be treated through a combination of infiltration patios and landscape planters. Private roadways, alleys and roof runoff directed to the alleys will be treated by pervious gutters in the streets pervious valley gutters in the alleys.

- Stormwater Planters – Buildings 14-25 (as shown in Figure 5)
- Pervious Concrete Gutter Infiltration – Street E and D (see Figure 7)
- Pervious Concrete Valley Gutter Infiltration – Alleys (see Figure 7)
- Self-Treating & Self-Retaining Landscape Areas (see Figure 6)

IV. SOURCE CONTROL MEASURES

A. Permanent Source Control BMP's

- *On-Site Drain Inlets* – On-site inlets will be impressed with "NO DUMPING-DRAINS TO BAY."

- *Landscape / Outdoor Pesticide Use* – Landscaping will be designed to minimize required irrigation and runoff, to promote surface infiltration, and to minimize the use of fertilizers and pesticides that can contribute to storm water pollution. Where possible, pest-resistant plants will be selected, especially for locations adjacent to hardscape. Plants will be selected appropriate to site soils, slopes, climate, sun, wind, rain, land use, air movement, ecological consistency, and plant interactions.

- *Fire Sprinkler Test Water* – Sanitary sewer connections shall be provided to drain fire sprinkler test water

- *Refuse Areas* – New structures shall provide a covered or enclosed area for dumpsters. The area shall be designed to prevent water run-on to the area and run-off from the area.

- *Regular Street Sweeping* – Routine street sweeping should be conducted to remove debris and ensure permeability of pervious concrete.

B. Operational Source Control BMP's

- *On-site Drain Inlets* – Inlet markings will be inspected annually and replaced or renewed as needed.

- *Private Streets* – Owner of private streets and storm drains shall prepare and implement a plan for street sweeping of paved private roads and cleaning of all storm drain inlets.

- *Vehicle and Equipment Cleaning* – Residential CC&R's will prohibit maintenance, repair, or cleaning of vehicles or other equipment on site.

- *Paved Sidewalks and Parking Lots* – Sidewalks and parking lots shall be swept regularly to prevent the accumulation of litter and debris.

- *Landscape / Outdoor Pesticide Use* – All on-site landscaping is to be privately maintained by the property owner using Integrated Pest Management (IPM) principles, with minimal or no use of pesticides.

V. PERMITTING AND CODE COMPLIANCE ISSUES

There are no known conflicts between the proposed Stormwater Control Plan and the City of Milpitas ordinances and policies. Any conflicts that are found will be resolved through the design review process or during subsequent permitting.

VI. BMP MAINTENANCE REQUIREMENTS

A. Recommended BMP Maintenance

Proper operation and maintenance of stormwater management facilities will be the responsibility of the property owner in perpetuity. The property owner will be subject to an annual fee (set by the City's standard fee schedule) to offset the cost of inspecting the site or verifying that the stormwater management facilities are being maintained.

The applicant will prepare and submit, for the City's review, an acceptable Stormwater Control Operation and Maintenance Plan prior to the completion of construction and will execute a Stormwater Management Facilities Operation and Maintenance Agreement before sale, transfer, or permanent occupancy of the site. The applicant accepts the responsibility for maintenance of stormwater management facilities until such responsibility is transferred to another entity.

Treatment BMP's require minimum maintenance similar to that for any landscape areas. BMP's must be regularly maintained to insure that they continue to be effective and do not cause flooding or other harmful nuisances. The maintenance requirements are:

<u>Bioretention</u>

- Limit the use of fertilizers and/or pesticides. Mosquito larvicides should be applied only when absolutely necessary.
- Replace and amend plants and soils as necessary to insure the planters are effective and attractive. Plants must remain healthy and trimmed if overgrown. Soils must be maintained to efficiently filter the storm water.
- Visually inspect for ponding water to ensure that filtration is occurring.
- After all major storm events remove trash, inspect drain pipes and bubble-up risers for obstructions and remove if necessary.
- Continue general landscape maintenance, including pruning and cleanup throughout the year.
- Irrigate throughout the dry season. Irrigation will be provided with sufficient quantity and frequency to allow plants to thrive.
- Excavate, clean and or replace filter media (sand, gravel, topsoil) to insure adequate infiltration rate. (annually or as needed)

<u>Pervious Concrete (Gutter, Valley Gutters, Pavers, etc.)</u>

- Regular sweeping of pervious surfaces to remove large debris.
- Annual pressure washing of pervious surfaces.

Landscape Areas (Self-Treating, Self-Retaining, etc.)

- Limit the use of fertilizers and/or pesticides. Mosquito larvicides should be applied only when absolutely necessary.
- Replace and amend plants and soils as necessary to insure the planters are effective and attractive. Plants must remain healthy and trimmed if overgrown. Soils must be maintained to efficiently filter the storm water.
- After all major storm events remove trash and inspect drain pipes obstructions and remove if necessary.
- Continue general landscape maintenance, including pruning and cleanup throughout the year.
- Irrigate throughout the dry season. Irrigation will be provided with sufficient quantity and frequency to allow plants to thrive.

Media Filtration

See the following guidelines for Kristar's recommended maintenance specifications of the TreePod Biofilters.

VII. SUMMARY FORMS

A. Construction Plan C.3 Checklist

Stormwater Control Plan Page #	BMP Description	See Plan Sheet #s
Figure 5,Figure 9	Stormwater Planter	
Figure 6	Self-Treating & Self-Treating Landscape	
Figure 5, Figure 10	Patio Infiltration Area	
Figure 7, Figure 11	Pervious Concrete Gutter Infiltration	
Figure 7, Figure 12	Pervious Concrete Valley Gutter Infiltration	
Figure 8	KriStar TreePod Biofilter	
Section IV	Inlets that could be accessed from sidewalks or driveways are to be marked with "no dumping" message	
Section IV	Adequate trash receptacles throughout common areas	

B. C.3 Data Form

City of Milpitas **C.3 Data Form**

Submit with Stormwater Control Plan

When Should This Form Be Completed?

Complete this form if any of the following applies:

- Project was "deemed complete" between Oct. 15, 2003 – Oct. 5, 2005 and has added or replaced an impervious surface area of 1 acre (43,500 square feet) or more.
- Project was "deemed complete" after Oct. 6, 2005 and has added or replaced an impervious surface area of 10,000 square feet or more and falls within the Group 2A categories (see below).

Note: For public roadways, include new impervious surface areas, but not replaced impervious surface areas.

What is an Impervious Surface?

Any surface on or above ground that prevents the infiltration or passage of water into the soil. Impervious surfaces include, but are not limited to, non-absorbent rooftops, paved or covered patios, driveways, parking lots, paved walkways, compacted soil or rock, and streets. It includes streets, roads, highways, and freeways that are under the City of Milpitas' jurisdiction and any newly constructed paved surface used primarily for the transportation of automobiles, trucks, motorcycles, and other motorized vehicles. Excluded from this category are public sidewalks, bicycle lanes, trails, bridge accessories, guardrails, and landscape features.

How To Determine the Date "Deemed Complete"

Private projects are "deemed complete" when the list of requirements needed for planning application submittals (provided by the Planning Division) is complete and ready to be processed. This list includes the Stormwater Control Plan. **Public projects** are "deemed complete" when City Council approves ***design*** funding.

What are the Group 2A Categories?

- Gas stations;
- Auto wrecking yards;
- Loading dock areas and surface parking lots containing more than 10,000 square feet or more of impervious surface area;
- Vehicle or equipment maintenance areas (including washing and repair), outdoor handling or storage of waste or hazardous materials, outdoor manufacturing area(s), outdoor food handling or processing, outdoor animal care, outdoor horticultural activities, and various other industrial and commercial uses where potential pollutant loading cannot be satisfactorily mitigated through other post-construction source control and site design practices.

For More Information

Contact the Planning Division at 408-586-3279.

APN # 086-36-003
086-36-004
086-36-005
086-36-006

Date: 04/01/2013

Project Name: TRAVERSE

Project Description: 206 Unit Multi-Family Residential

Project Location (Address): Northside of Trade Zone Blvd. 569/595/615/625 Trade Zone Blvd.

Applicant Info (Name, Address, Phone #): Warmington Residential
2400 Camino Ramon, Suite 234, San Ramon, CA 94583 (935)866-6700

Contractor / Designer Info (Name, Company, Address, Phone #): Carlson, Barbee & Gibson, Inc.
6111 Bollinger Canyon Road, Suite 150, San Ramon, CA 94583
(925) 866-0322

1. ☐ **Public** ☒ **Private**
2. ☐ **New** ☒ **Redevelopment**
3. **Project Type** (select one):
   - ☐ Commercial/Industrial
   - ☐ Mixed Use
   - ☒ Residential
   - ☐ Restaurant / Retail
   - ☐ Shopping Center
   - ☐ Streets / Roads / Highways
4. **Impervious Surface Area (SF = Square Feet):**
   - a. Entire Site Size 544,500 SF
   - b. **EXISTING** Impervious Surface Area 130,680 SF
   - c. **EXISTING** Impervious Surface Area **to be Removed** 130,680 SF

d.	**NEW** Impervious Surface Area **to be Added or Replaced**	392,040 SF
e.	**TOTAL** Impervious Surface Area (b-c+d)	392,040 SF

50% Rule (only applies to existing developments NOT subject to stormwater treatment measures):

f.	Percent Impervious Surface Area in Final Design (e/a x 100%)	72 %

For Significant Redevelopments (check appropriate box):
- ☐ If 50% or more, the entire project must be included in the treatment measure design.
- ☐ If less than 50%, only that affected portion must be included in the treatment measure design.

g. **Total Land Disturbance** During Construction Includes clearing, grading, and excavating. 544,500 SF

5. **Pesticide Reduction Measures Used (Check all that apply):**

- ☐ None - Doesn't Apply
- ☐ Education
- ☐ Conditions of Approval
- ☐ Physical and Mechanical Horticultural Measures
- ☐ Environmental Measures
- ☐ Biological Measures
- ☐ Chemical Measures
- ☒ Other HOA Regulations

6. **Stormwater Control Measures Used (Check the appropriate boxes that apply to the project):**

SITE DESIGN

- ☐ Minimize land disturbance
- ☒ Minimize impervious surfaces
- ☒ Minimum-impact street design
- ☒ Minimum-impact driveway or parking lot design
- ☒ Cluster structures/pavement
- ☒ Disconnect downspouts
- ☐ Alternative driveway design
- ☐ Microdetention in landscape
- ☐ Preserve open space: _____ sq. ft.
- ☐ Protect riparian and wetland areas, riparian buffers (setback from top of bank: _____ ft.)
- ☒ Minimize change in runoff hydrograph
- ☐ Other: _____

STORMWATER TREATMENT

- ☒ Bioretention
- ☐ Drain Insert
- ☐ Exfiltration Trench
- ☐ Extended Detention Basin
- ☐ Hydrodynamic Separators
- ☐ Infiltration Basin
- ☒ Infiltration Trench
- ☒ Media Filter
- ☐ Multiple Systems
- ☒ Planter Boxes
- ☒ Porous Pavement
- ☐ Retention/Irrigation
- ☐ Roof Gardens
- ☐ Underground Detention Systems
- ☐ Vegetated Buffer Strip
- ☐ Vegetated Swale
- ☐ Vortex Separator*
- ☐ Water Quality Inlet
- ☐ Wet Pond
- ☐ Wet Vault
- ☐ Wetland
- ☐ Other: _____

SOURCE CONTROLS

- ☐ Alternative building materials
- ☐ Wash area/racks, drain to sanitary sewer
- ☒ Covered dumpster area, drain to sanitary sewer
- ☐ Swimming pool/fountain drain to sanitary sewer
- ☒ Beneficial landscaping (minimizes irrigation, runoff, pesticides and fertilizers; promotes treatment)
- ☒ Outdoor material storage protection
- ☐ Covers, drains for loading docks, maintenance bays, fueling areas
- ☒ Maintenance (street sweeping, catch basin cleaning)
- ☒ Permeable pavement
- ☒ Storm Drain Signage
- ☐ Green or Blue Roofs
- ☐ Other: _____

FOR CITY STAFF ONLY

PRIVATE PROJECTS	*PUBLIC PROJECTS*
Planning:	***Design & Construction Engineering / Special Projects:***
Date Received: _____	Date Received: _____
By (Name): _____	By (Name): _____
Permit #: _____	Permit #: _____
Project #, if aplicable: _____	Project #, if aplicable: _____
Master Permit #, if applicable: _____	Master Permit #, if applicable: _____
Date Entered into Database: _____	Date Entered into Database: _____
By (Name): _____	By (Name): _____

VIII. CERTIFICATION

Carlson, Barbee & Gibson, Inc.
CIVIL ENGINEERS • SURVEYORS • PLANNERS

April 1, 2013
Job No.: 2076-000

Mr. Babak Kaderi
CITY OF MILPITAS
Engineering Department
455 E. Calaveras Blvd.
Milpitas, CA 95035

Subject: Stormwater Control Plan Certification
Traverse – Warmington Residential
APNs: 086-36-003 thru 006
Milpitas, California

Dear Babak,

The preliminary selection, sizing, and design of treatment BMP's and other control measures in this plan meet the requirements of Regional Water Quality Control Board Adopted Order R2-2009-0074.

Very truly yours,

Jason J. Neri, P.E.
Principal

6111 BOLLINGER CANYON ROAD, SUITE 150 • SAN RAMON, CALIFORNIA 94583 • (925) 866-0322 • FAX (925) 866-8575 • www.cbandg.com

Tables

TABLE 1 - Site Data

Existing Site - Surface Type

Impervious Surface	Area (SF)	Area (AC)	%	C
Roof/Pavement/Concrete	*130,680*	*3.0*	*24%*	*0.90*
Pervious Surface				
General	*413,820*	*9.5*	*76%*	*0.10*
Total	**544,500**	**12.5**	**100%**	**0.29**

Proposed Site - Surface Type

Impervious Surface	Area (SF)	Area (AC)	%	C
Roof	*146,820*	*3.4*	*27%*	*0.90*
Concrete	*136,270*	*3.1*	*25%*	*0.80*
Asphalt	*76,640*	*1.8*	*14%*	*0.70*
Pervious Surface				
Landscape	*184,770*	*4.2*	*34%*	*0.10*
Total	**544,500**	**12.5**	**100%**	**0.58**

TABLE 2 - Estimated Runoff Coefficients for Various Surfaces

(Table B-3 from SCVURPP's C.3 Stormwater Handbook, April 2012)

Types of Surface	"C" Factor
Roofs	0.90
Concrete	0.80
Stone, Brick, or Concrte Pavers w/ mortared joints and bedding	0.80
Asphalt	0.70
Stone, Brick or Concrete Paver w/ sand joints and bedding	0.70
Pervious Concrete	0.10
Porous Asphalt	0.10
Permeable Interlocking Concrete Pavement	0.10
Grid Pavements with Grass of Aggregate Surface	0.10
Crushed Aggregate	0.10
Grass	0.10

TABLE 3 - Preliminary BMP Sizing

PART 1: Treatment Area and Drainage Areas

	Available Treatment Area (SF)		Drainage Areas (SF)		
Building No.	Landscape	Patio	Bldg (Alley)	Bldg (to Paseo)	Pavement
Building 1	1935	560	3238	1174	
Building 2	1715	395	3238	1174	
Alley 1					2895
Building 3	1795	395	3238	1174	
Building 4	2155	610	3238	1174	
Alley 2					2795
Building 5	1875	605	3238	1174	
Building 6	1530	510	4038	1174	
Building 7	1890	510	4038	1174	
Alley 4 - 1/2					3140
Building 8	1425	780	4038	1174	
Building 9	2045	625	3238	1174	
Alley 4 - 1/2					3140
Building 10	2060	1000	4838	1174	
Building 11	2075	835	4838	1174	
Alley 5 - 1/2					4105
Building 12	2050	625	4838	1174	
Building 13	940	510	4038	1174	
Alley 5 - 1/2					4105
Building 14	855	510	4038	1174	
Building 15	1765	510	4038	1174	
Alley 6 - 1/2					3520
Building 16	1795	395	3238	1174	
Building 17	945	895	3238	1174	
Alley 6 - 1/2					3520
Building 18	1230	385	1889	2488	
Building 19	2210	400	1889	2488	
Alley 7					2340
Building 20	2145	400	1889	2488	
Building 21	1030	1035	1889	2488	
Alley 8					2340
Building 22	920		3500	2488	
Building 23	1665	550	3100	2488	
Alley 9					3440
Building 24	1380	420	3100	2488	
Building 25	1175		3500	2488	
Alley 10					3700
Building 26	1355		3500	2488	
Building 27	1430	190	2300	2488	
Alley 11					3120
Building 28	1780		2300	2488	
Building 29	1295		3500	2488	
Alley 12					3220

TABLE 3 - Preliminary BMP Sizing

PART 2: Treatment and Design Volume Sizing

Building No.	Required Treatment Volume: Volume Based Treatment (CF) Drainage to Alley	Required Treatment Volume: Volume Based Treatment (CF) Bldg Drainage to Paseo	Design Treatment Volume (CF): Alley Assume 0.4 Void Ratio	Design Treatment Volume (CF): Patio Assume 0.4 Void Ratio	Design Treatment Volume (CF): Planter Assume 0.3 Void Ratio
Building 1	253	92		229	305
Building 2	253	92		229	305
Alley 1	226				
Sub-Total	**731**		1827		
Building 3	253	92		229	305
Building 4	253	92		229	305
Alley 2	218				
Sub-Total	**723**		1808		
Building 5	253	92		229	305
Building 6	315	92		229	305
Building 7	315	92		229	305
Alley 4 - 1/2	245		612		
Sub-Total	**1127**		2819		
Building 8	315	92		229	305
Building 9	253	92		229	305
Alley 4 - 1/2	245				
Sub-Total	**812**		2031		
Building 10	377	92		229	305
Building 11	377	92		229	305
Alley 5 - 1/2	320				
Sub-Total	**1075**		2687		
Building 12	377	92		229	305
Building 13	315	92		229	305
Alley 5 - 1/2	320				
Sub-Total	**1013**		2531		
Building 14	315	92		229	305
Building 15	315	92		229	305
Alley 6 - 1/2	275				
Sub-Total	**904**		2261		
Building 16	253	92		229	305
Building 17	253	92		229	305
Alley 6 - 1/2	275				
Sub-Total	**780**		1949		
Building 18	147	194		485	647
Building 19	147	194		485	647
Alley 7	183				
Sub-Total	**477**		1193		
Building 20	147	194		485	647
Building 21	147	194		485	647
Alley 8	183				
Sub-Total	**477**		1193		
Building 22	273	194		485	647
Building 23	242	194		485	647
Alley 9	268				
Sub-Total	**783**		1958		
Building 24	242	194		485	647
Building 25	273	194		485	647
Alley 10	289				
Sub-Total	**803**		2009		
Building 26	273	194		485	647
Building 27	179	194		485	647
Alley 11	243				
Sub-Total	**696**		1739		
Building 28	179	194			647
Building 29	273	194			647
Alley 12	251				
Sub-Total	**704**		1759		

NOTE: Patio and Bioretention Planters preliminary sized per drainage being treated exclusively by that method. Final Design treat stormwater with a combination of features.

TABLE 3 - Preliminary BMP Sizing

PART 3: Treatment Area Sizing

Building No.	Preliminary Planter		Preliminary Patio		Preliminary Infiltration Valley		
	Footprint (SF)	Depth (FT)	Footprint (SF)	Depth (FT)	Length (FT)	Width (FT)	Depth (FT)
Building 1	1000	0.31	500	0.5			
Building 2	1000	0.31	300	0.8			
Alley 1					105	6	3
Building 3	1000	0.31	300	0.8			
Building 4	2000	0.15	600	0.4			
Alley 2					106	6	3
Building 5	1000	0.31	600	0.4			
Building 6	1000	0.31	500	0.5			
Building 7	1000	0.31	500	0.5			
Alley 4 - 1/2					150	6	3
Building 8	1000	0.31	700	0.3			
Building 9	2000	0.15	600	0.4			
Alley 4 - 1/2					150	6	2
Building 10	2000	0.15	1000	0.2			
Building 11	2000	0.15	800	0.3			
Alley 5 - 1/2					150	6	3
Building 12	2000	0.15	600	0.4			
Building 13			500	0.5			
Alley 5 - 1/2					150	6	3
Building 14			500	0.5			
Building 15	1000	0.31	500	0.5			
Alley 6 - 1/2					125	6	3
Building 16	1000	0.31	300	0.8			
Building 17			800	0.3			
Alley 6 - 1/2					125	6	3
Building 18	1000	0.65	300	1.6			
Building 19	2000	0.32	400	1.2			
Alley 7					100	6	2
Building 20	2000	0.32	400	1.2			
Building 21	1000	0.65	1000	0.5			
Alley 8					100	6	2
Building 22							
Building 23	1000	0.65	500	1.0			
Alley 9					145	6	2
Building 24	1000	0.65	400	1.2			
Building 25	1000	0.65					
Alley 10					155	6	2
Building 26	1000	0.65					
Building 27	1000	0.65	100	4.9			
Alley 11					135	6	2
Building 28	1000	0.65					
Building 29	1000	0.65					
Alley 12					145	6	2

NOTE: Patio and Bioretention Planters preliminary sized per drainage being treated exclusively by that method. Final Design treat stormwater with a combination of features.

TABLE 4 - Flow Based Treatment Control

Sizing based upon Section III.C - Sizing Flow-Based Treatment Measure based on the Unifiorm Intensity Approach of the SCVURPPP C.3 Stormwater Handbook, April 2012. Uniform Design Intesity is equal to 0.2 in/hr. See Appendix C for Section III.C. Sizing Worksheets.

Drainage Area 'A' - Trade Zone Blvd.

Surface Type	Area (SF)	Area (AC)	%	C	Treatment Flow (cfs)
Impervious Surface					
Concrete	5,626	0.13	22%	0.80	
Asphalt	20,494	0.47	78%	0.70	
Roof	0	0.00	0%	0.90	
Pervious Surface					
Landscape	0	0.00	0%	0.10	
Total	26,120	0.60	100%	0.72	**0.09**

Drainage Area 'B' - Existing Momentum Drive

Surface Type	Area (SF)	Area (AC)	%	C	Treatment Flow (cfs)
Impervious Surface					
Concrete	3,636	0.08	28%	0.80	
Asphalt	9,305	0.21	72%	0.70	
Roof	0	0.00	0%	0.90	
Pervious Surface					
Landscape	0	0.00	0%	0.10	
Total	12,941	0.30	100%	0.73	**0.04**

Drainage Area 'C' - Street C

Surface Type	Area (SF)	Area (AC)	%	C	Treatment Flow (cfs)
Impervious Surface					
Concrete	3,666	0.08	14%	0.80	
Asphalt	19,874	0.46	76%	0.70	
Roof	0	0.00	0%	0.90	
Pervious Surface					
Landscape	0	0.00	0%	0.10	
Total	23,540	0.54	90%	0.64	**0.07**

Drainage Area 'D' - Street A & Street B

Surface Type	Area (SF)	Area (AC)	%	C	Treatment Flow (cfs)
Impervious Surface					
Concrete	6,910	0.16	53%	0.80	
Asphalt	19,860	0.46	153%	0.70	
Roof	0	0.00	0%	0.90	
Pervious Surface					
Landscape	0	0.00	0%	0.10	
Total	26,770	0.61	207%	1.50	**0.18**

Figures

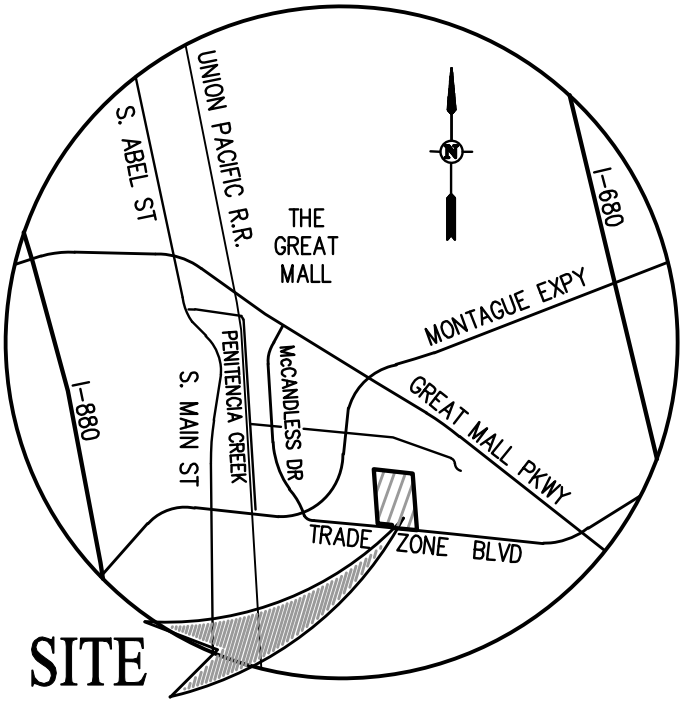

VICINITY MAP

(NTS)

FIGURE 1

VICINITY MAP

TRAVERSE

CITY OF MILPITAS SANTA CLARA COUNTY CALIFORNIA

SCALE: NTS DATE: APRIL 2013

Carlson, Barbee & Gibson, Inc.
CIVIL ENGINEERS • SURVEYORS • PLANNERS
6111 BOLLINGER CANYON ROAD, SUITE 150
SAN RAMON, CALIFORNIA 94583
(925) 866-0322
FAX (925) 866-8575

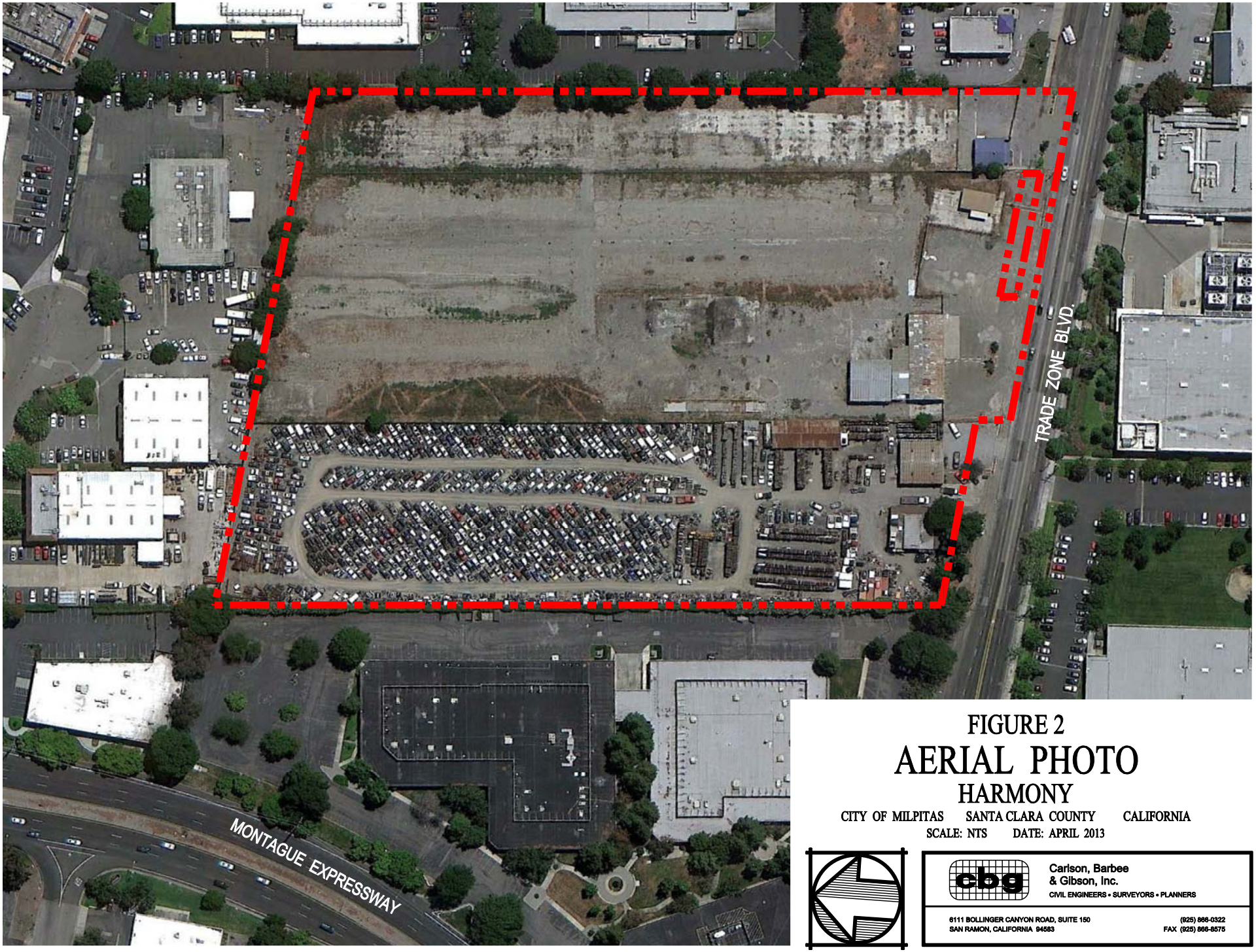

FIGURE 2
AERIAL PHOTO
HARMONY

CITY OF MILPITAS SANTA CLARA COUNTY CALIFORNIA

SCALE: NTS DATE: APRIL 2013

Carlson, Barbee & Gibson, Inc.
CIVIL ENGINEERS • SURVEYORS • PLANNERS
6111 BOLLINGER CANYON ROAD, SUITE 150
SAN RAMON, CALIFORNIA 94583
(925) 866-0322
FAX (925) 866-8575

G:\2076\ACAD\EXHIBITS\SWCP FIGURES\FIGURE 2 - AERIAL.DWG

LEGEND

- PROJECT BOUNDARY
- EXISTING STORM DRAIN
- IMPERVIOUS AREA - 24%
- PERVIOUS AREA - 76%
- EX BUILDING (INCLUDED IN IMPERVIOUS AREA)

NOTES:
1. EXISTING ON-SITE DRIANAGE SYSTEM IS UNKNOWN. LOCATION OF EXISTING FACILITIES TO BE DETERMINED UPON SITE DESIGN.

FIGURE 3
EXISTING CONDITIONS
TRAVERSE

CITY OF MILPITAS SANTA CLARA COUNTY CALIFORNIA

SCALE: NTS DATE: APRIL 2013

cbg
Carlson, Barbee & Gibson, Inc.
CIVIL ENGINEERS • SURVEYORS • PLANNERS
6111 BOLLINGER CANYON ROAD, SUITE 150
SAN RAMON, CALIFORNIA 94583
(925) 866-0322
FAX (925) 866-8575

G:\2076\ACAD\EXHIBITS\SWCP FIGURES\FIGURE 3 - EXISTING CONDITIONS.DWG

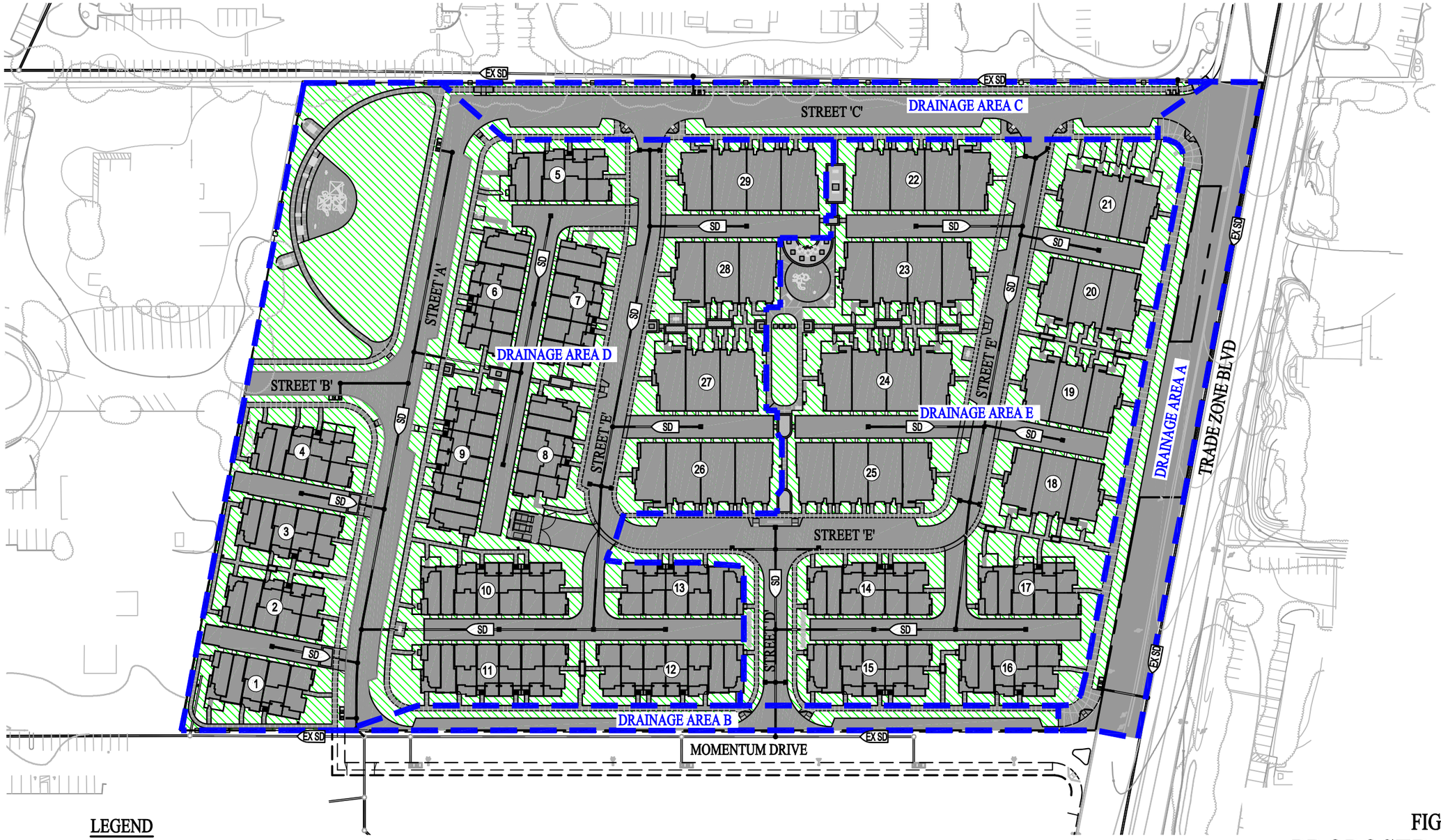

LEGEND

- PROJECT BOUNDARY
- DRAINAGE AREA
- EXISTING STORM DRAIN
- PROPOSED STORM DRAIN
- (1) BUILDING NUMBER
- IMPERVIOUS AREA - 72%
- PERVIOUS AREA - 28%

FIGURE 4
PROPOSED CONDITIONS
TRAVERSE

CITY OF MILPITAS SANTA CLARA COUNTY CALIFORNIA

SCALE: NTS DATE: APRIL 2013

Carlson, Barbee & Gibson, Inc.
CIVIL ENGINEERS • SURVEYORS • PLANNERS
6111 BOLLINGER CANYON ROAD, SUITE 150
SAN RAMON, CALIFORNIA 94583
(925) 866-0322
FAX (925) 866-8575

G:\2076\ACAD\EXHIBITS\SWCP FIGURES\FIGURE 4 - PROPOSED CONDITIONS.DWG

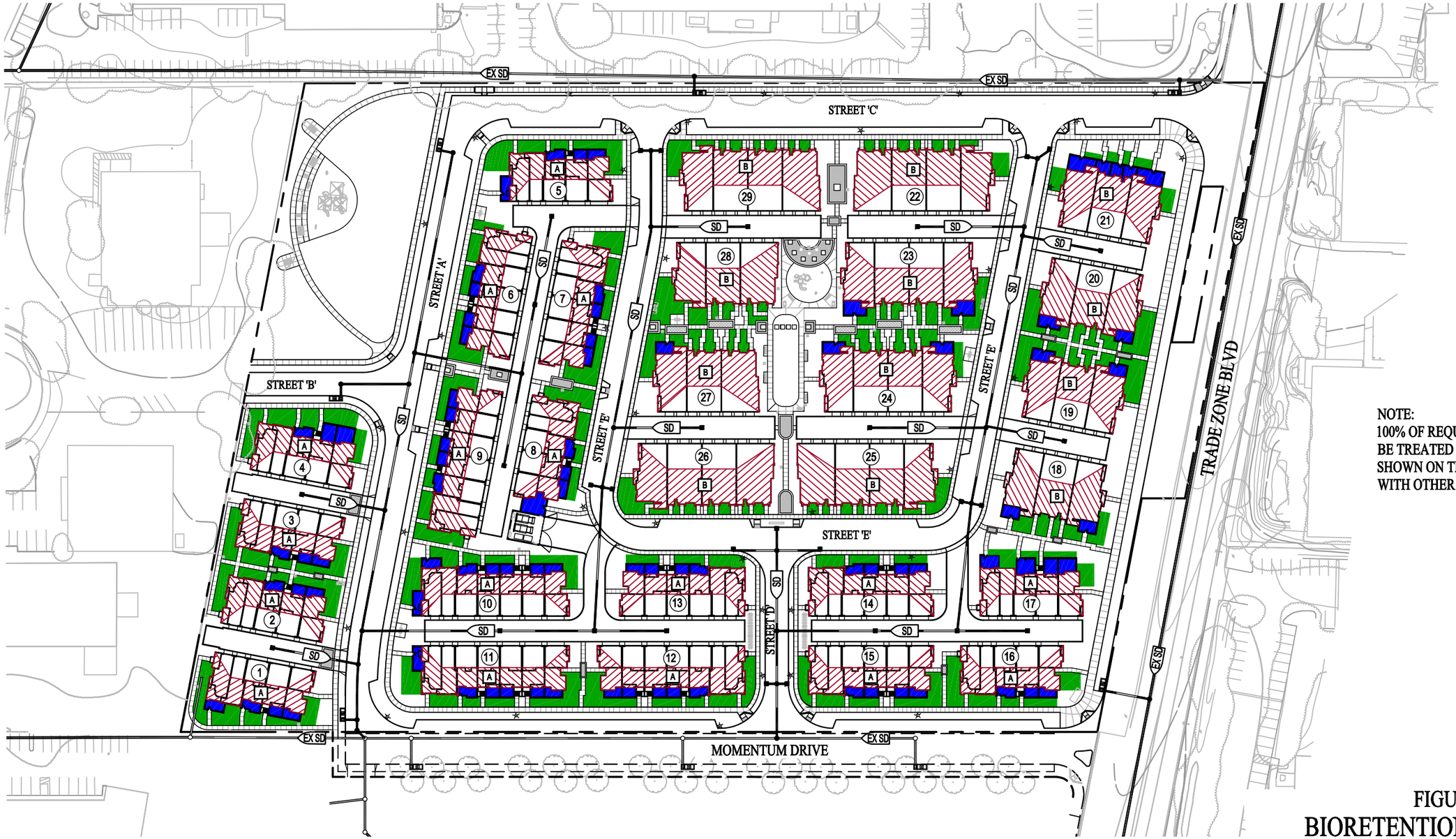

NOTE:
100% OF REQUIRED SITE STORM WATER TO BE TREATED USING TREAMENT FEATURES SHOWN ON THIS FIGURE IN CONJUNCTION WITH OTHER FIGURES IN THSI SWCP.

LEGEND

- PROJECT BOUNDARY
- EXISTING STORM DRAIN
- PROPOSED STORM DRAIN
- (1) BUILDING NUMBER
- BIORETENTION PLANTER AREA
- DRAINAGE AREA - BUILDING
- INFILTRATION PATIO
- [A] TREATMENT AREA ID -COMBINATION BIORETENTION PLANTER/INFILTRATION PATIO
- [B] TREATMENT AREA ID -BIO RETENTION PLANTER

FIGURE 5
BIORETENTION PLANTER & INFILTRATION PATIO AREAS
TRAVERSE

CITY OF MILPITAS SANTA CLARA COUNTY CALIFORNIA

SCALE: NTS DATE: APRIL 2013

cbg
Carlson, Barbee & Gibson, Inc.
CIVIL ENGINEERS • SURVEYORS • PLANNERS
6111 BOLLINGER CANYON ROAD, SUITE 150
SAN RAMON, CALIFORNIA 94583
(925) 866-0322
FAX (925) 866-8575

G:\2076\ACAD\EXHIBITS\SWCP FIGURES\FIGURE 5 - PLANTERS AND INFILTRATION PATIOS.DWG

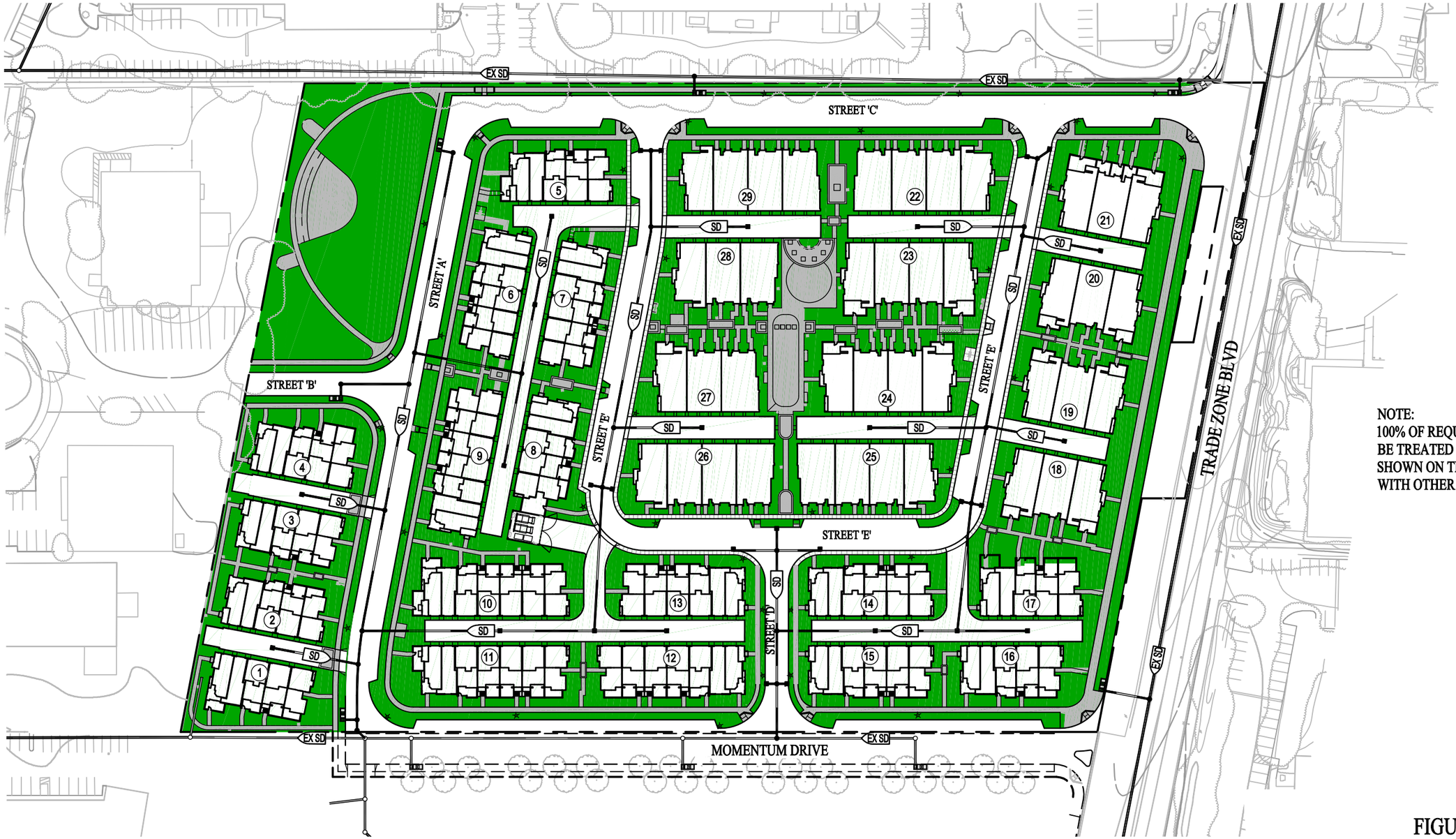

NOTE:
100% OF REQUIRED SITE STORM WATER TO BE TREATED USING TREAMENT FEATURES SHOWN ON THIS FIGURE IN CONJUNCTION WITH OTHER FIGURES IN THSI SWCP.

LEGEND

- PROJECT BOUNDARY
- EXISTING STORM DRAIN
- PROPOSED STORM DRAIN
- (1) BUILDING NUMBER
- SELF-TREATING & SELF-RETAINING LANDSCAPE AREA
- SIDEWALK (DRAINS TO SELF-RETAINING LANDSCAPE OR BIO RETENTION PLANTER)

FIGURE 6
LANDSCAPE TREATMENT AREAS
TRAVERSE

CITY OF MILPITAS SANTA CLARA COUNTY CALIFORNIA
SCALE: NTS DATE: APRIL 2013

cbg
Carlson, Barbee & Gibson, Inc.
CIVIL ENGINEERS • SURVEYORS • PLANNERS
6111 BOLLINGER CANYON ROAD, SUITE 150
SAN RAMON, CALIFORNIA 94583
(925) 866-0322
FAX (925) 866-8575

G:\2076\ACAD\EXHIBITS\SWCP FIGURES\FIGURE 6 - LANDSCAPE AREAS.DWG

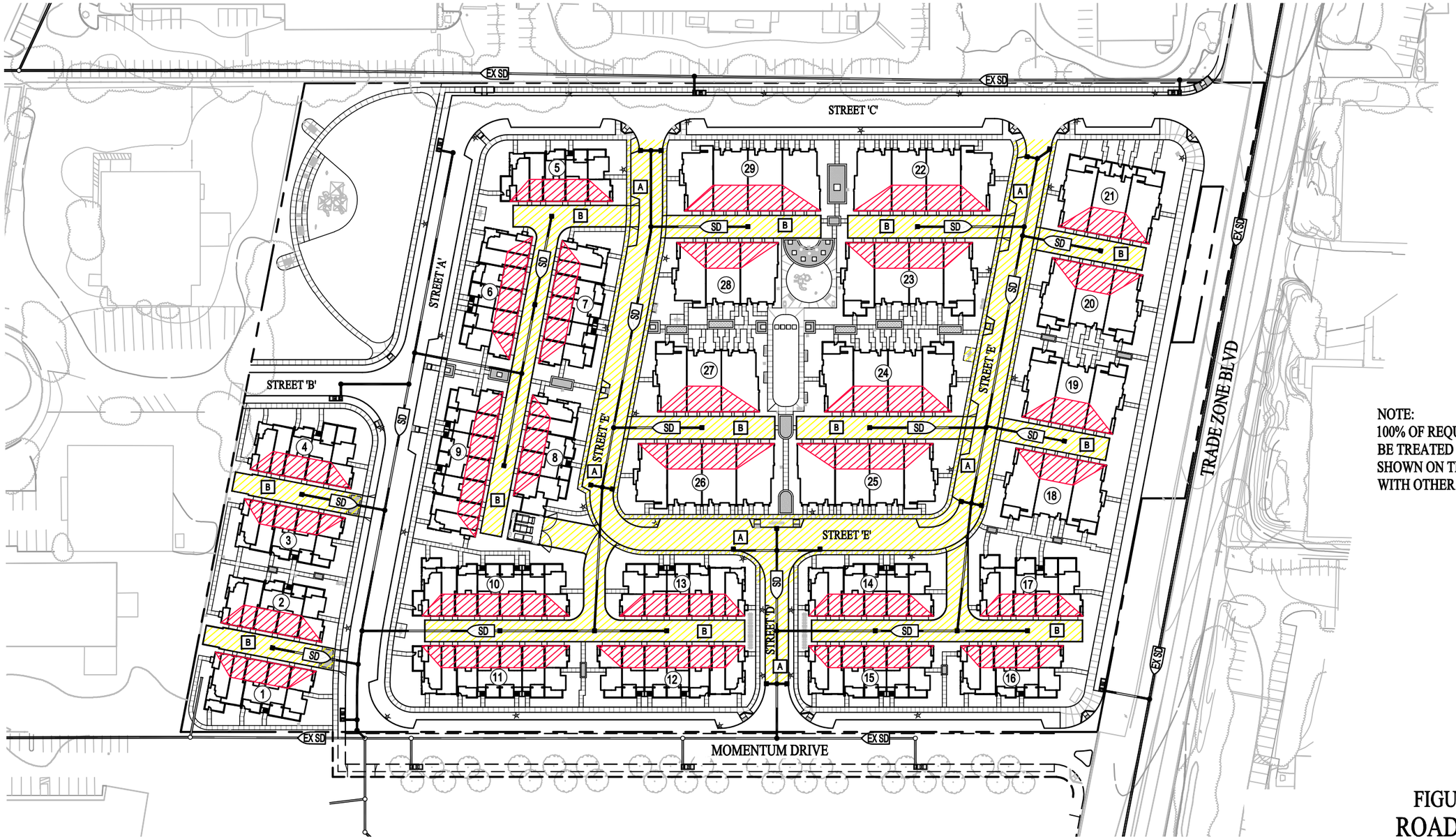

NOTE:
100% OF REQUIRED SITE STORM WATER TO BE TREATED USING TREAMENT FEATURES SHOWN ON THIS FIGURE IN CONJUNCTION WITH OTHER FIGURES IN THSI SWCP.

LEGEND

- PROJECT BOUNDARY
- EXISTING STORM DRAIN
- PROPOSED STORM DRAIN
- (1) BUILDING NUMBER
- DRAINAGE AREA - BUILDING
- DRAINAGE AREA - STREET/ALLEY
- [A] TREATMENT AREA ID -PERVIOUS GUTTER
- [B] TREATMENT AREA ID -PERVIOUS VALLEY GUTTER

FIGURE 7
ROADWAY INFILTRATION AREAS
TRAVERSE

CITY OF MILPITAS SANTA CLARA COUNTY CALIFORNIA
SCALE: NTS DATE: APRIL 2013

cbg
Carlson, Barbee & Gibson, Inc.
CIVIL ENGINEERS • SURVEYORS • PLANNERS
6111 BOLLINGER CANYON ROAD, SUITE 150
SAN RAMON, CALIFORNIA 94583
(925) 866-0322
FAX (925) 866-8575

G:\2076\ACAD\EXHIBITS\SWCP FIGURES\FIGURE 7 - ROADWAY INFILTRATION AREAS.DWG

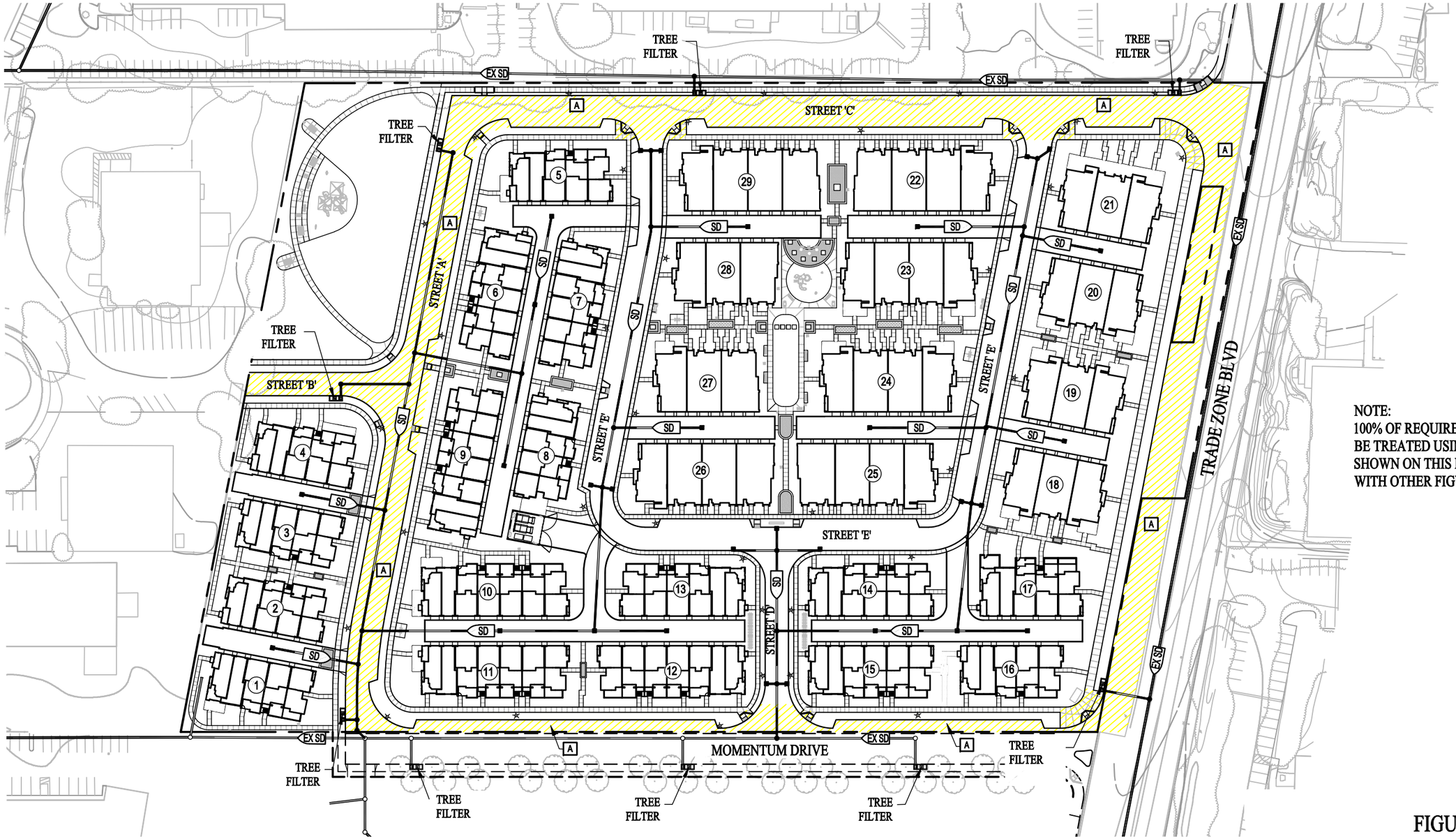

NOTE:
100% OF REQUIRED SITE STORM WATER TO BE TREATED USING TREAMENT FEATURES SHOWN ON THIS FIGURE IN CONJUNCTION WITH OTHER FIGURES IN THSI SWCP.

LEGEND

— — —	PROJECT BOUNDARY
═══	EXISTING STORM DRAIN
━━━	PROPOSED STORM DRAIN
(1)	BUILDING NUMBER
▨	DRAINAGE AREA
[A]	TREATMENT AREA ID -TREE FILTER

FIGURE 8
BIORETENTION TREE FILTERS
TRAVERSE

CITY OF MILPITAS SANTA CLARA COUNTY CALIFORNIA
SCALE: NTS DATE: APRIL 2013

cbg
Carlson, Barbee & Gibson, Inc.
CIVIL ENGINEERS • SURVEYORS • PLANNERS
6111 BOLLINGER CANYON ROAD, SUITE 150
SAN RAMON, CALIFORNIA 94583
(925) 866-0322
FAX (925) 866-8575

G:\2076\ACAD\EXHIBITS\SWCP FIGURES\FIGURE 8 - BIO-RETENTION TREE FILTERS.DWG

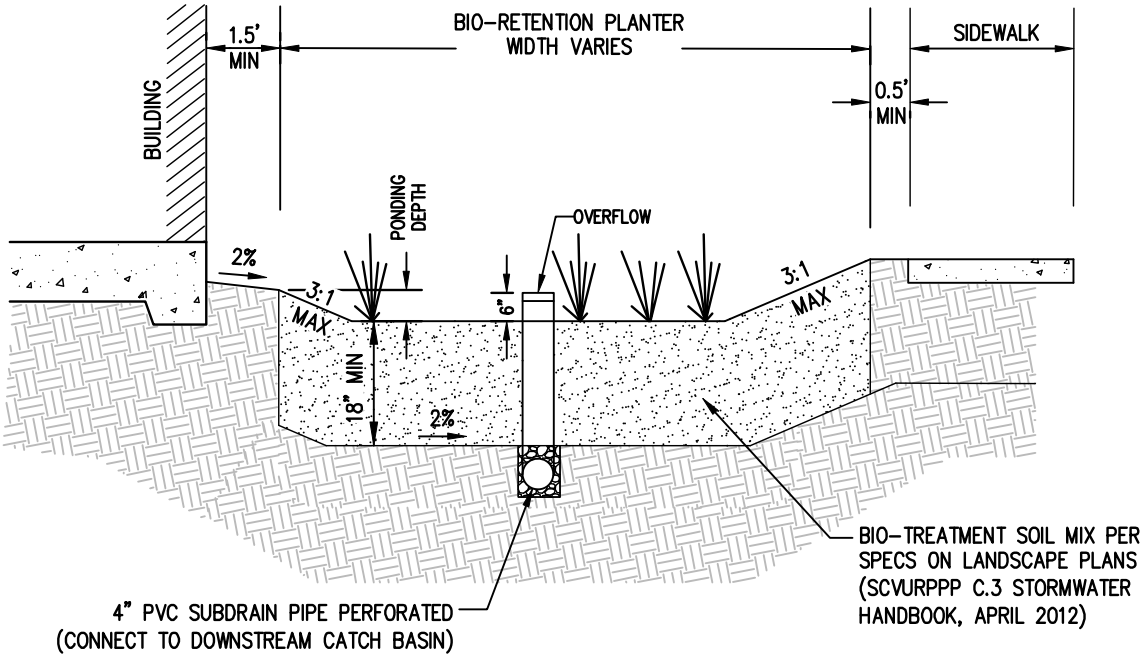

FIGURE 9
BIORETENTION PLANTER

TRAVERSE

CITY OF MILPITAS SANTA CLARA COUNTY CALIFORNIA

SCALE: NTS DATE: JUNE 2012

Carlson, Barbee & Gibson, Inc.
CIVIL ENGINEERS • SURVEYORS • PLANNERS
6111 BOLLINGER CANYON ROAD, SUITE 150
SAN RAMON, CALIFORNIA 94583
(925) 866-0322
FAX (925) 866-8575

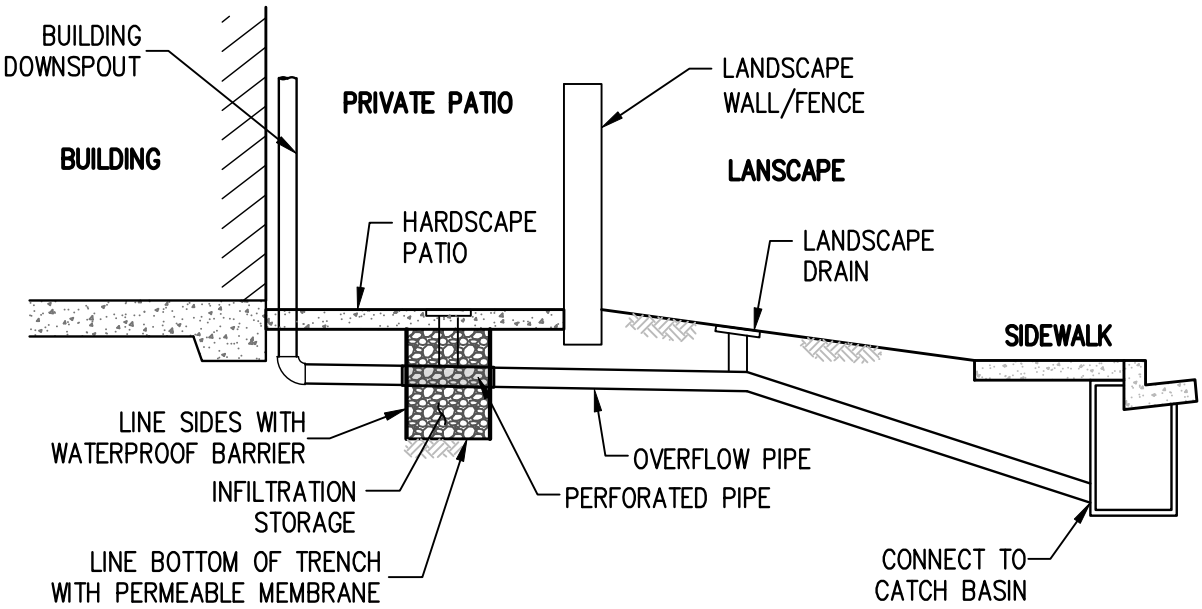

FIGURE 10
INFILTRATION PATIO DETAIL
TRADE ZONE PROPERTIES

CITY OF MILPITAS SANTA CLARA COUNTY CALIFORNIA

SCALE: NTS DATE: MARCH 2013

cbg
Carlson, Barbee & Gibson, Inc.
CIVIL ENGINEERS • SURVEYORS • PLANNERS
6111 BOLLINGER CANYON ROAD, SUITE 150
SAN RAMON, CALIFORNIA 94583
(925) 866-0322
FAX (925) 866-8575

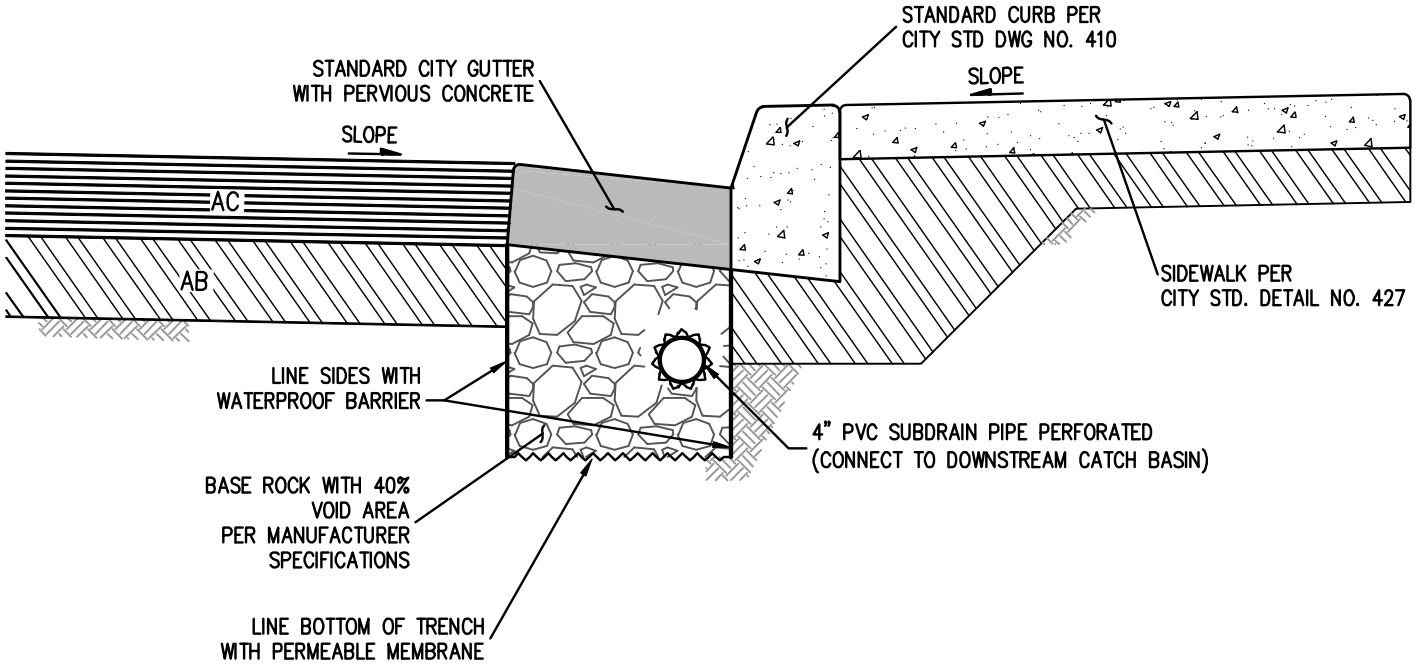

PERVIOUS CONCRETE GUTTER DETAIL

NOT TO SCALE

FIGURE 11

PERVIOUS GUTTER DETAIL

TRAVERSE

CITY OF MILPITAS SANTA CLARA COUNTY CALIFORNIA

SCALE: NTS DATE: APRIL 2013

Carlson, Barbee & Gibson, Inc.
CIVIL ENGINEERS • SURVEYORS • PLANNERS
6111 BOLLINGER CANYON ROAD, SUITE 150
SAN RAMON, CALIFORNIA 94583
(925) 866-0322
FAX (925) 866-8575

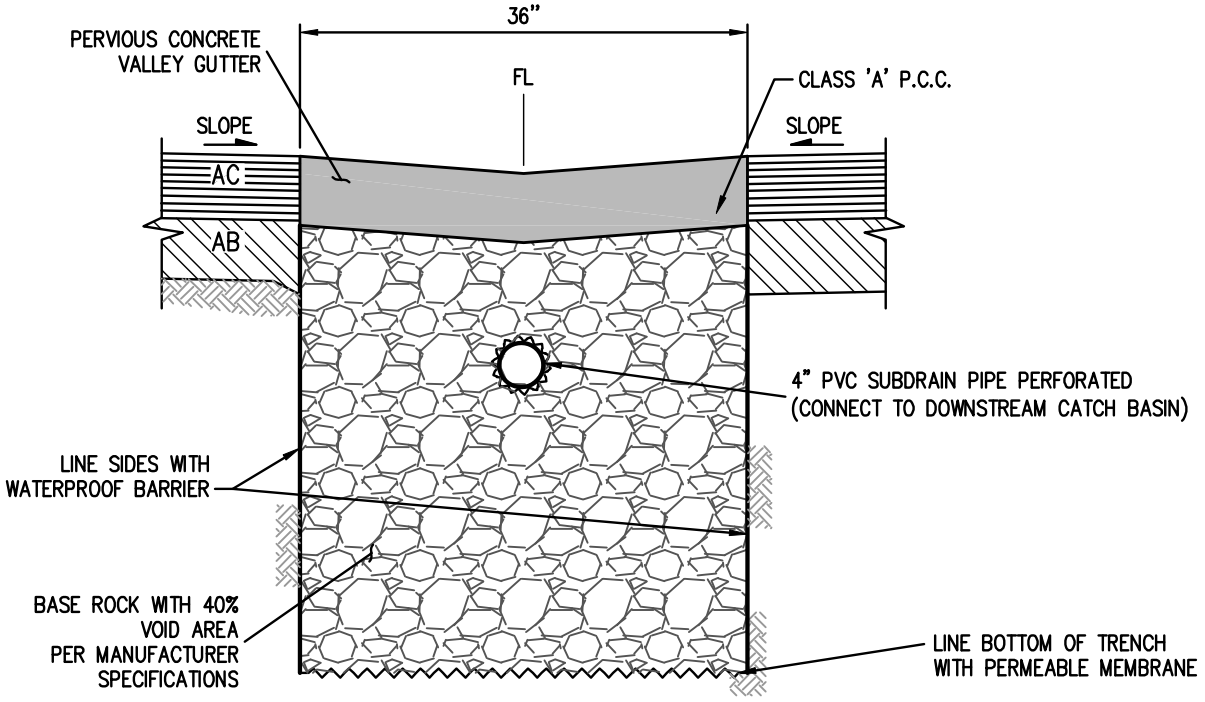

VALLEY GUTTER DETAIL

NOT TO SCALE

FIGURE 12

PERVIOUS VALLEY GUTTER DETAIL

TRAVERSE

CITY OF MILPITAS SANTA CLARA COUNTY CALIFORNIA

SCALE: NTS DATE: APRIL 2013

Carlson, Barbee & Gibson, Inc.
CIVIL ENGINEERS • SURVEYORS • PLANNERS
6111 BOLLINGER CANYON ROAD, SUITE 150
SAN RAMON, CALIFORNIA 94583
(925) 866-0322
FAX (925) 866-8575

Appendix A

TPB-IB-0002

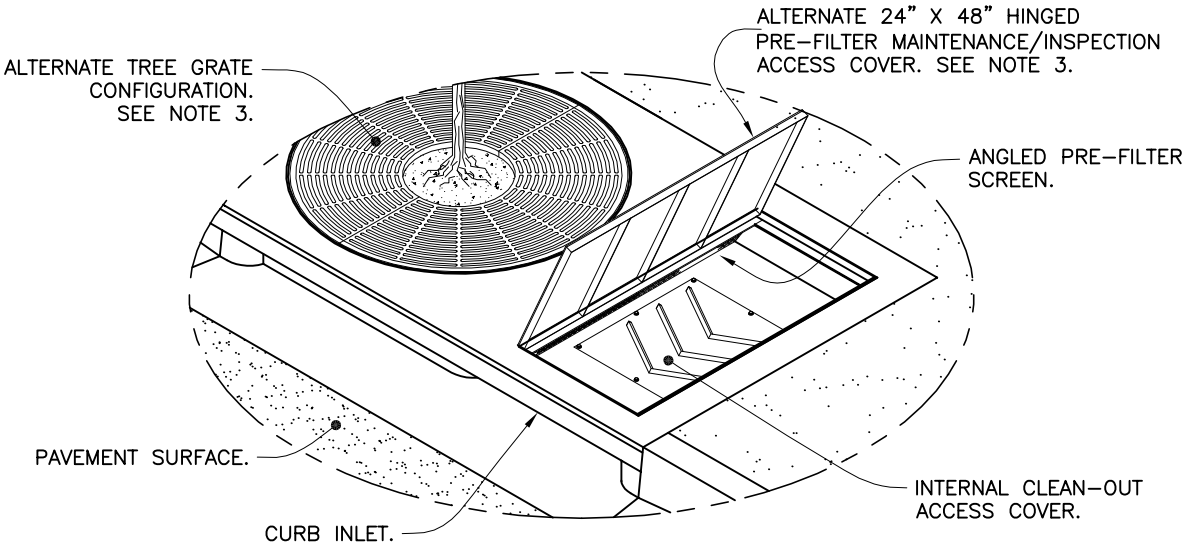

ALTERNATE TREE GRATE & ACCESS COVER CONFIGURATIONS

SEE NOTE 3
SCALE: 1X

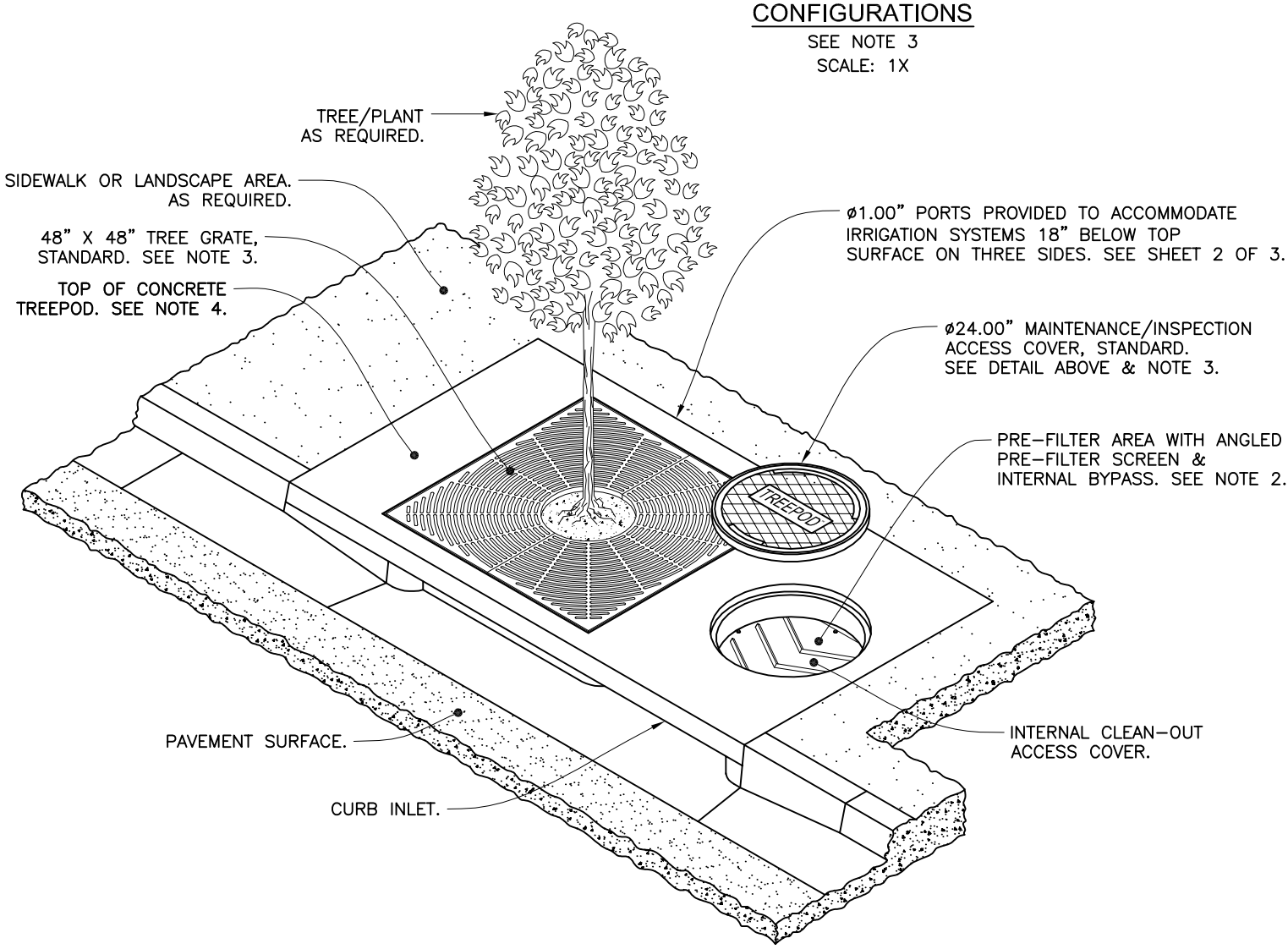

SEE SHEET 3 OF 3 FOR NOTES, SPECIFICATIONS & CAPACITIES.

TREEPOD™ Biofilter

with Internal Bypass
(Side Inlet Version)

US PATENT

KriStar Enterprises, Inc.
360 Sutton Place, Santa Rosa, CA 95407
Ph: 800.579.8819, Fax: 707.524.8186, www.kristar.com

DRAWING NO.	REV	ECO	DATE	
TPB-IB-0002	C	ECO-0084 JPR 9/29/10	JPR 3/13/09	SHEET 1 OF 3

TPB-IB-0002

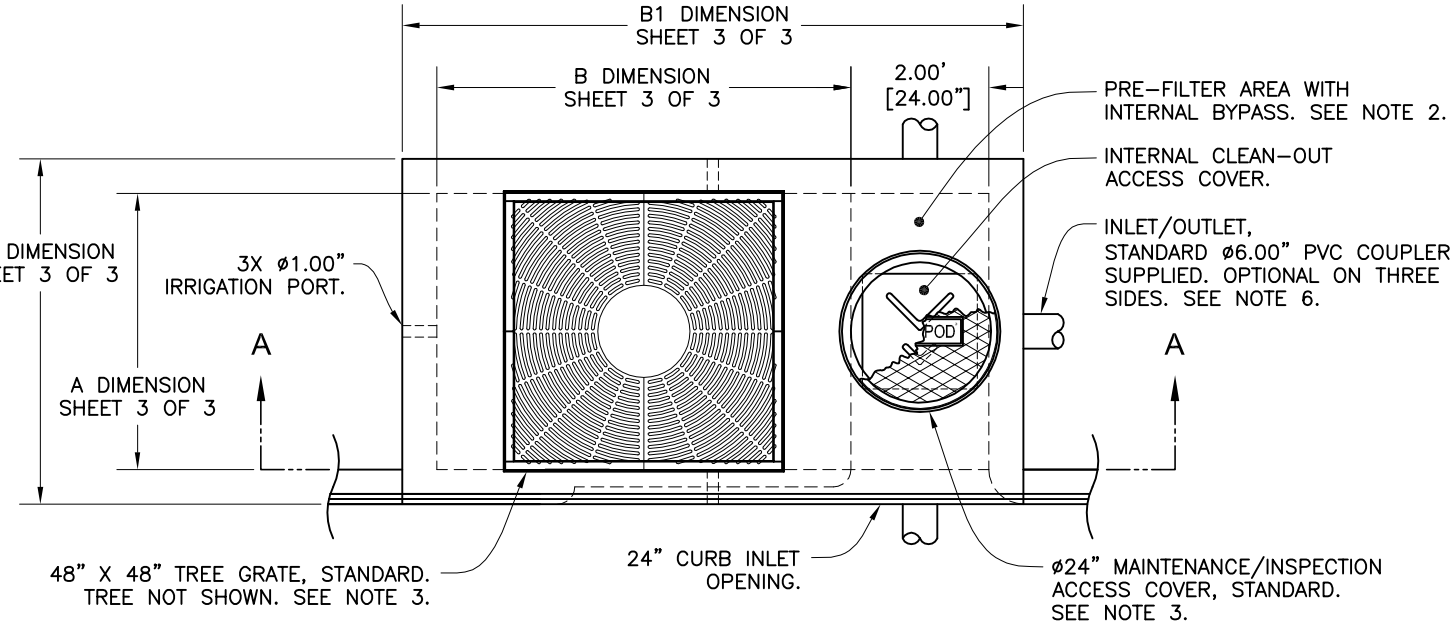

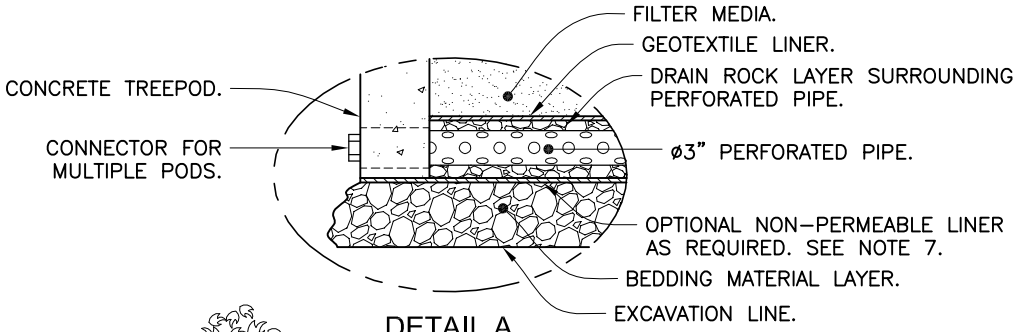

DETAIL A

SCALE: NONE

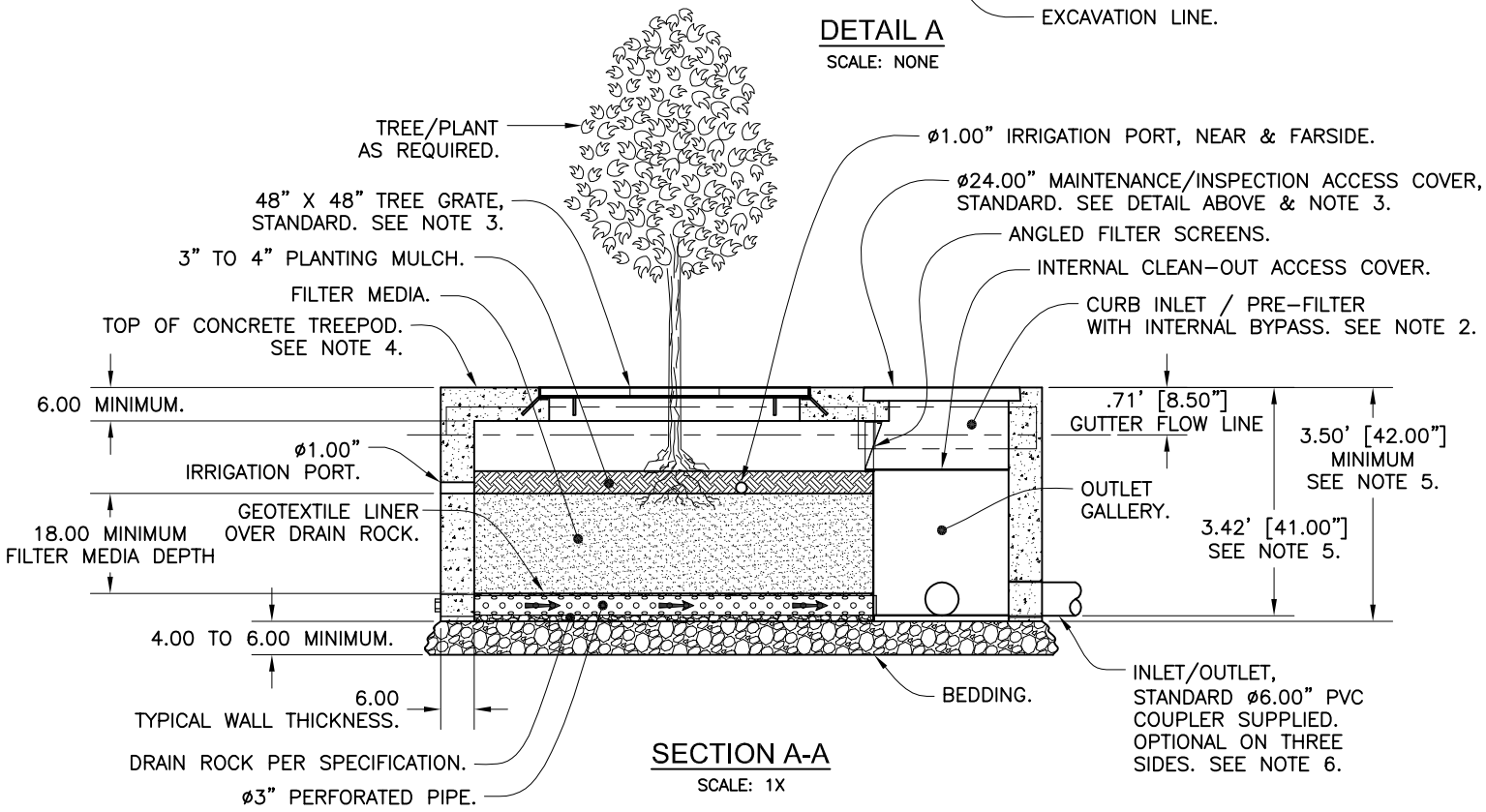

SECTION A-A

SCALE: 1X

SEE SHEET 3 OF 3 FOR NOTES, SPECIFICATIONS & CAPACITIES.

US PATENT

TREEPOD™ Biofilter

with Internal Bypass

(Side Inlet Version)

US PATENT

TREEPOD™ Biofilter

KriStar Enterprises, Inc.

360 Sutton Place, Santa Rosa, CA 95407

Ph: 800.579.8819, Fax: 707.524.8186, www.kristar.com

DRAWING NO.	REV	ECO	DATE	
TPB-IB-0002	C	ECO-0084 JPR 9/29/10	JPR 3/13/09	SHEET 2 OF 3

TPB-IB-0002

TABULATION

POD SIZE		FOOT PRINT (OD)		TREE / GRATE QUANTITY SEE NOTE X	RATED FLOW CAPACITY (GPM / CFS)	MAX. DRAINAGE AREA TREATED [1] (ACRE)	MAX. DRAINAGE AREA TREATED [2] (ACRE)	MAX. DRAINAGE AREA TREATED [3] (ACRE)	MAX. DRAINAGE AREA TREATED [4] (ACRE)
A DIM	B DIM	A1 DIM	B1 DIM						
4'	4'	5'	7'	1 EA	16 / 0.036	0.18	0.22	0.30	0.44
4'	5'	5'	8'	1 EA	20 / 0.045	0.23	0.28	0.38	0.56
4'	6'	5'	9'	1 EA	24 / 0.054	0.27	0.33	0.44	0.67
4'	7'	5'	10'	1 EA	28 / 0.062	0.31	0.39	0.52	0.78
4'	8'	5'	11'	1 EA	32 / 0.071	0.36	0.44	0.59	0.89
4'	9'	5'	12'	1 EA	36 / 0.080	0.40	0.50	0.67	1.00
4'	10'	5'	13'	1 EA	40 / 0.089	0.45	0.56	0.74	1.11
4'	11'	5'	14'	2 (MAX)	44 / 0.098	0.49	0.61	0.82	1.23
4'	12'	5'	15'	2 (MAX)	48 / 0.11	0.55	0.69	0.92	1.38
5'	4'	6'	7'	1 EA	20 / 0.045	0.23	0.28	0.38	0.56
5'	5'	6'	8'	1 EA	25 / 0.056	0.28	0.35	0.47	0.70
5'	6'	6'	9'	1 EA	30 / 0.067	0.34	0.42	0.56	0.84
5'	7'	6'	10'	1 EA	35 / 0.078	0.39	0.49	0.65	0.98
5'	8'	6'	11'	1 EA	40 / 0.089	0.49	0.61	0.82	1.23
5'	9'	6'	12'	1 EA	45 / 0.10	0.50	0.63	0.83	1.25
5'	10'	6'	13'	1 EA	50 / 0.111	0.55	0.70	0.93	1.39
5'	11'	6'	14'	2 (MAX)	55 / 0.123	0.62	0.77	1.03	1.54
5'	12'	6'	15'	2 (MAX)	60 / 0.133	0.67	0.83	1.11	1.66
6'	4'	7'	7'	1 EA	24 / 0.054	0.27	0.33	0.44	0.67
6'	5'	7'	8'	1 EA	30 / 0.067	0.34	0.42	0.56	0.84
6'	6'	7'	9'	1 EA	36 / 0.080	0.40	0.50	0.67	1.00
6'	7'	7'	10'	1 EA	42 / 0.094	0.47	0.59	0.78	1.18
6'	8'	7'	11'	1 EA	48 / 0.11	0.55	0.69	0.92	1.38
6'	9'	7'	12'	1 EA	54 / 0.12	0.60	0.75	1.00	1.50
6'	10'	7'	13'	1 EA	60 / 0.134	0.67	0.83	1.11	1.67
6'	11'	7'	14'	2 (MAX)	66 / 0.147	0.74	0.92	1.23	1.84
6'	12'	7'	15'	2 (MAX)	72 / 0.160	0.80	1.00	1.33	2.00

[1] C = 1.00, I = 0.20 inch / hour
[2] Commercial Development where; C = 0.80, I = 0.20 inch / hour
[3] Detached Multi-Unit Residential where; C = 0.60, I = 0.20 inch / hour
[4] Suburban Residential where; C = 0.40, I = 0.20 inch / hour

C - values from San Diego County Hydrology Manual (2002)
I - values reflect Uniform Intensity Approach targeting 85%-ile storm (CASQA).

NOTES:

1. PRECAST CONCRETE TREEPOD VAULT CONFORMS TO ASTM C857 & C858.
2. FOR BYPASS FLOW RATES CONTACT KRISTAR ENTERPRISES, INC.
3. KRISTAR STANDARD ø24.00" (CAST IRON OR CONCRETE) MAINTENANCE/INSPECTION ACCESS COVER & 48.00" X 48.00" TREE GRATES SUPPLIED, ALTERNATE 24.00" X 48.00" HINGED FULL ACCESS COVER AND/OR ALTERNATE TREE GRATE/ACCESS COVER CONFIGURATIONS TO MEET LOCAL AGENCY STANDARDS ARE AVAILABLE UPON REQUEST.
4. RECESSED DECKING FOR VEGETATED LANDSCAPE AREAS OR ALTERNATE FINISHED SURFACES (e.g. PAVERS, ETC.) CAN BE PROVIDED AS REQUIRED UPON REQUEST.
5. STANDARD MINIMUM STRUCTURE DEPTH IS 3.5' [42.00"], OUTLET INVERT IS SLIGHTLY LESS TO ACCOMMODATE PIPE SIZE & TYPE. FOR DEPTHS LESS THAN THE STATED MINIMUM CONTACT KRISTAR ENTERPRISES, INC. FOR ENGINEERING ASSISTANCE.
6. BOTH INLET & OUTLET PIPES CAN BE ACCOMMODATED ON THREE SIDES UNDER THE PREFILTER AREA ALLOWING JUNCTION CONNECTIONS TO BE MADE. STANDARD UNITS ARE SUPPLIED WITH ø6.00" PVC COUPLERS CAST MONOLITHIC, HOWEVER PIPE SIZES UP TO ø18" RCP CAN BE ACCOMMODATED UPON REQUEST. FOR SIZES OVER ø18.00" RCP CONTACT KRISTAR ENTERPRISES, INC. FOR ENGINEERING ASSISTANCE.
7. FOR APPLICATIONS THAT DO NOT REQUIRE INFILTRATION, A NON–PERMEABLE LINER CAN BE PLACED BETWEEN THE UNIT & BEDDING MATERIAL.

US PATENT

TREEPOD™ Biofilter

TREEPOD™ Biofilter

with Internal Bypass
(Side Inlet Version)

US PATENT

KriStar Enterprises, Inc.
360 Sutton Place, Santa Rosa, CA 95407
Ph: 800.579.8819, Fax: 707.524.8186, www.kristar.com

DRAWING NO.	REV	ECO	DATE	
TPB-IB-0002	C	ECO–0084 JPR 9/29/10	JPR 3/13/09	SHEET 3 OF 3

Appendix B

Media Filter MP-40

Description

Stormwater media filters are usually two-chambered including a pretreatment settling basin and a filter bed filled with sand or other absorptive filtering media. As stormwater flows into the first chamber, large particles settle out, and then finer particles and other pollutants are removed as stormwater flows through the filtering media in the second chamber.

There are currently three manufacturers of stormwater filter systems. Two are similar in that they use cartridges of a standard size. The cartridges are placed in vaults; the number of cartridges a function of the design flow rate. The water flows laterally (horizontally) into the cartridge to a centerwell, then downward to an underdrain system. The third product is a flatbed filter, similar in appearance to sand filters.

California Experience

There are currently about 75 facilities in California that use manufactured filters.

Advantages

- Requires a smaller area than standard flatbed sand filters, wet ponds, and constructed wetlands.
- There is no standing water in the units between storms, minimizing but does not entirely eliminate the opportunity for mosquito breeding.
- Media capable of removing dissolved pollutants can be selected.
- One system utilizes media in layers, allowing for selective removal of pollutants.
- The modular concept allows the design engineer to more closely match the size of the facility to the design storm.

Limitations

- As some of the manufactured filter systems function at higher flow rates and/or have larger media than found in flatbed filters, the former may not provide the same level of performance as standard sand filters. However, the level of treatment may still be satisfactory.
- As with all filtration systems, use in catchments that have significant areas of non-stabilized soils can lead to premature clogging.

Design Considerations

- Design Storm
- Media Type
- Maintenance Requirement

Targeted Constituents

- ☑ Sediment
- ☑ Nutrients
- ☑ Trash
- ☑ Metals
- Bacteria
- ☑ Oil and Grease
- ☑ Organics

Removal Effectiveness

See New Development and Redevelopment Handbook-Section 5.

CASQA
CALIFORNIA STORMWATER QUALITY ASSOCIATION

Design and Sizing Guidelines

There are currently three manufacturers of stormwater filter systems.

Filter System A: This system is similar in appearance to a slow-rate sand filter. However, the media is cellulose material treated to enhance its ability to remove hydrocarbons and other organic compounds. The media depth is 12 inches (30 cm). It operates at a very high rate, 20 gpm/ft2 at peak flows. Normal operating rates are much lower assuming that the stormwater covers the entire bed at flows less than the peak rate. The system uses vortex separation for pretreatment. As the media is intended to remove sediments (with attached pollutants) and organic compounds, it would not be expected to remove dissolved pollutants such as nutrients and metals unless they are complexed with the organic compounds that are removed.

Filter System B: It uses a simple vertical filter consisting of 3 inch diameter, 30 inch high slotted plastic pipe wrapped with fabric. The standard fabric has nominal openings of 10 microns. The stormwater flows into the vertical filter pipes and out through an underdrain system. Several units are placed vertically at 1 foot intervals to give the desired capacity. Pretreatment is typically a dry extended detention basin, with a detention time of about 30 hours. Stormwater is retained in the basin by a bladder that is automatically inflated when rainfall begins. This action starts a timer which opens the bladder 30 hours later. The filter bay has an emptying time of 12 to 24 hours, or about 1 to 2 gpm/ft2 of filter area. This provides a total elapsed time of 42 to 54 hours. Given that the media is fabric, the system does not remove dissolved pollutants. It does remove pollutants attached to the sediment that is removed.

Filter System C: The system use vertical cartridges in which stormwater enters radially to a center well within the filter unit, flowing downward to an underdrain system. Flow is controlled by a passive float valve system, which prevents water from passing through the cartridge until the water level in the vault rises to the top of the cartridge. Full use of the entire filter surface area and the volume of the cartridge is assured by a passive siphon mechanism as the water surface recedes below the top of the cartridge. A balance between hydrostatic forces assures a more or less equal flow potential across the vertical face of the filter surface. Hence, the filter surface receives suspended solids evenly. Absent the float valve and siphon systems, the amount of water treated over time per unit area in a vertical filter is not constant, decreasing with the filter height; furthermore, a filter would clog unevenly. Restriction of the flow using orifices ensures consistent hydraulic conductivity of the cartridge as a whole by allowing the orifice, rather than the media, whose hydraulic conductivity decreases over time, to control flow.

The manufacturer offers several media used singly or in combination (dual- or multi-media). Total media thickness is about 7 inches. Some media, such as fabric and perlite, remove only suspended solids (with attached pollutants). Media that also remove dissolved include compost, zeolite, and iron-infused polymer. Pretreatment occurs in an upstream unit and/or the vault within which the cartridges are located.

Water quality volume or flow rate (depending on the particular product) is determined by local governments or sized so that 85% of the annual runoff volume is treated.

Construction/Inspection Considerations

- Inspect one or more times as necessary during the first wet season of operation to be certain that it is draining properly.

Performance

The mechanisms of pollutant removal are essentially the same as with public domain filters (TC -40) if of a similar design. Whether removal of dissolved pollutants occurs depends on the media. Perlite and fabric do not remove dissolved pollutants, whereas for examples, zeolites, compost, activated carbon, and peat have this capability.

As most manufactured filter systems function at higher flow rates and have larger media than found in flatbed filters, they may not provide the same level of performance as standard sand filters. However, the level of treatment may still be satisfactory.

Siting Criteria

There are no unique siting criteria.

Additional Design Guidelines

Follow guidelines provided by the manufacturer.

Maintenance

- Maintenance activities and frequencies are specific to each product. Annual maintenance is typical.
- Manufactured filters, like standard filters (TC-40), require more frequent maintenance than most standard treatment systems like wet ponds and constructed wetlands, typically annually for most sites.
- Pretreatment systems that may precede the filter unit should be maintained at a frequency specified for the particular process.

Cost

Manufacturers provide costs for the units including delivery. Installation costs are generally on the order of 50 to 100 % of the manufacturer's costs.

Cost Considerations

- Filters are generally more expensive to maintain than swales, ponds, and basins.
- The modularity of the manufactured systems allows the design engineer to closely match the capacity of the facility to the design storm, more so than with most other manufactured products.

References and Sources of Additional Information

Minton, G.R., 2002, Stormwater Treatment: Biological, Chemical, and Engineering Principles, RPA Press, 416 pages.

Pervious Pavements SD-20

Design Objectives

- ☑ Maximize Infiltration
- ☑ Provide Retention
- ☑ Slow Runoff
- ☑ Minimize Impervious Land Coverage
- Prohibit Dumping of Improper Materials
- Contain Pollutants
- Collect and Convey

Description

Pervious paving is used for light vehicle loading in parking areas. The term describes a system comprising a load-bearing, durable surface together with an underlying layered structure that temporarily stores water prior to infiltration or drainage to a controlled outlet. The surface can itself be porous such that water infiltrates across the entire surface of the material (e.g., grass and gravel surfaces, porous concrete and porous asphalt), or can be built up of impermeable blocks separated by spaces and joints, through which the water can drain. This latter system is termed 'permeable' paving. Advantages of pervious pavements is that they reduce runoff volume while providing treatment, and are unobtrusive resulting in a high level of acceptability.

Approach

Attenuation of flow is provided by the storage within the underlying structure or sub base, together with appropriate flow controls. An underlying geotextile may permit groundwater recharge, thus contributing to the restoration of the natural water cycle. Alternatively, where infiltration is inappropriate (e.g., if the groundwater vulnerability is high, or the soil type is unsuitable), the surface can be constructed above an impermeable membrane. The system offers a valuable solution for drainage of spatially constrained urban areas.

Significant attenuation and improvement in water quality can be achieved by permeable pavements, whichever method is used. The surface and subsurface infrastructure can remove both the soluble and fine particulate pollutants that occur within urban runoff. Roof water can be piped into the storage area directly, adding areas from which the flow can be attenuated. Also, within lined systems, there is the opportunity for stored runoff to be piped out for reuse.

Suitable Applications

Residential, commercial and industrial applications are possible. The use of permeable pavement may be restricted in cold regions, arid regions or regions with high wind erosion. There are some specific disadvantages associated with permeable pavement, which are as follows:

CASQA
CALIFORNIA STORMWATER QUALITY ASSOCIATION

- Permeable pavement can become clogged if improperly installed or maintained. However, this is countered by the ease with which small areas of paving can be cleaned or replaced when blocked or damaged.
- Their application should be limited to highways with low traffic volumes, axle loads and speeds (less than 30 mph limit), car parking areas and other lightly trafficked or non-trafficked areas. Permeable surfaces are currently not considered suitable for adoptable roads due to the risks associated with failure on high speed roads, the safety implications of ponding, and disruption arising from reconstruction.
- When using un-lined, infiltration systems, there is some risk of contaminating groundwater, depending on soil conditions and aquifer susceptibility. However, this risk is likely to be small because the areas drained tend to have inherently low pollutant loadings.
- The use of permeable pavement is restricted to gentle slopes.
- Porous block paving has a higher risk of abrasion and damage than solid blocks.

Design Considerations

Designing New Installations

If the grades, subsoils, drainage characteristics, and groundwater conditions are suitable, permeable paving may be substituted for conventional pavement on parking areas, cul de sacs and other areas with light traffic. Slopes should be flat or very gentle. Scottish experience has shown that permeable paving systems can be installed in a wide range of ground conditions, and the flow attenuation performance is excellent even when the systems are lined.

The suitability of a pervious system at a particular pavement site will, however, depend on the loading criteria required of the pavement.

Where the system is to be used for infiltrating drainage waters into the ground, the vulnerability of local groundwater sources to pollution from the site should be low, and the seasonal high water table should be at least 4 feet below the surface.

Ideally, the pervious surface should be horizontal in order to intercept local rainfall at source. On sloping sites, pervious surfaces may be terraced to accommodate differences in levels.

Design Guidelines

The design of each layer of the pavement must be determined by the likely traffic loadings and their required operational life. To provide satisfactory performance, the following criteria should be considered:

- The subgrade should be able to sustain traffic loading without excessive deformation.
- The granular capping and sub-base layers should give sufficient load-bearing to provide an adequate construction platform and base for the overlying pavement layers.
- The pavement materials should not crack of suffer excessive rutting under the influence of traffic. This is controlled by the horizontal tensile stress at the base of these layers.

There is no current structural design method specifically for pervious pavements. Allowances should be considered the following factors in the design and specification of materials:

- Pervious pavements use materials with high permeability and void space. All the current UK pavement design methods are based on the use of conventional materials that are dense and relatively impermeable. The stiffness of the materials must therefore be assessed.
- Water is present within the construction and can soften and weaken materials, and this must be allowed for.
- Existing design methods assume full friction between layers. Any geotextiles or geomembranes must be carefully specified to minimize loss of friction between layers.
- Porous asphalt loses adhesion and becomes brittle as air passes through the voids. Its durability is therefore lower than conventional materials.

The single sized grading of materials used means that care should be taken to ensure that loss of finer particles between unbound layers does not occur.

Positioning a geotextile near the surface of the pervious construction should enable pollutants to be trapped and retained close to the surface of the construction. This has both advantages and disadvantages. The main disadvantage is that the filtering of sediments and their associated pollutants at this level may hamper percolation of waters and can eventually lead to surface ponding. One advantage is that even if eventual maintenance is required to reinstate infiltration, only a limited amount of the construction needs to be disturbed, since the sub-base below the geotextile is protected. In addition, the pollutant concentration at a high level in the structure allows for its release over time. It is slowly transported in the stormwater to lower levels where chemical and biological processes may be operating to retain or degrade pollutants.

The design should ensure that sufficient void space exists for the storage of sediments to limit the period between remedial works.

- Pervious pavements require a single size grading to give open voids. The choice of materials is therefore a compromise between stiffness, permeability and storage capacity.
- Because the sub-base and capping will be in contact with water for a large part of the time, the strength and durability of the aggregate particles when saturated and subjected to wetting and drying should be assessed.
- A uniformly graded single size material cannot be compacted and is liable to move when construction traffic passes over it. This effect can be reduced by the use of angular crushed rock material with a high surface friction.

In pollution control terms, these layers represent the site of long term chemical and biological pollutant retention and degradation processes. The construction materials should be selected, in addition to their structural strength properties, for their ability to sustain such processes. In general, this means that materials should create neutral or slightly alkaline conditions and they should provide favorable sites for colonization by microbial populations.

Construction/Inspection Considerations

- Permeable surfaces can be laid without cross-falls or longitudinal gradients.
- The blocks should be lain level
- They should not be used for storage of site materials, unless the surface is well protected from deposition of silt and other spillages.
- The pavement should be constructed in a single operation, as one of the last items to be built, on a development site. Landscape development should be completed before pavement construction to avoid contamination by silt or soil from this source.
- Surfaces draining to the pavement should be stabilized before construction of the pavement.
- Inappropriate construction equipment should be kept away from the pavement to prevent damage to the surface, sub-base or sub-grade.

Maintenance Requirements

The maintenance requirements of a pervious surface should be reviewed at the time of design and should be clearly specified. Maintenance is required to prevent clogging of the pervious surface. The factors to be considered when defining maintenance requirements must include:

- Type of use
- Ownership
- Level of trafficking
- The local environment and any contributing catchments

Studies in the UK have shown satisfactory operation of porous pavement systems without maintenance for over 10 years and recent work by Imbe et al. at 9th ICUD, Portland, 2002 describes systems operating for over 20 years without maintenance. However, performance under such regimes could not be guaranteed, Table 1 shows typical recommended maintenance regimes:

Table 1 Typical Recommended Maintenance Regimes	
Activity	**Schedule**
■ Minimize use of salt or grit for de-icing ■ Keep landscaped areas well maintained ■ Prevent soil being washed onto pavement	Ongoing
■ Vacuum clean surface using commercially available sweeping machines at the following times: - End of winter (April) - Mid-summer (July / August) - After Autumn leaf-fall (November)	2/3 x per year
■ Inspect outlets	Annual
■ If routine cleaning does not restore infiltration rates, then reconstruction of part of the whole of a pervious surface may be required. ■ The surface area affected by hydraulic failure should be lifted for inspection of the internal materials to identify the location and extent of the blockage. ■ Surface materials should be lifted and replaced after brush cleaning. Geotextiles may need complete replacement. ■ Sub-surface layers may need cleaning and replacing. ■ Removed silts may need to be disposed of as controlled waste.	As needed (infrequent) Maximum 15-20 years

Permeable pavements are up to 25 % cheaper (or at least no more expensive than the traditional forms of pavement construction), when all construction and drainage costs are taken into account. (Accepting that the porous asphalt itself is a more expensive surfacing, the extra cost of which is offset by the savings in underground pipework etc.) (Niemczynowicz, et al., 1987)

Table 1 gives US cost estimates for capital and maintenance costs of porous pavements (Landphair et al., 2000)

Redeveloping Existing Installations

Various jurisdictional stormwater management and mitigation plans (SUSMP, WQMP, etc.) define "redevelopment" in terms of amounts of additional impervious area, increases in gross floor area and/or exterior construction, and land disturbing activities with structural or impervious surfaces. The definition of " redevelopment" must be consulted to determine whether or not the requirements for new development apply to areas intended for redevelopment. If the definition applies, the steps outlined under "designing new installations" above should be followed.

Additional Information

Cost Considerations

Permeable pavements are up to 25 % cheaper (or at least no more expensive than the traditional forms of pavement construction), when all construction and drainage costs are taken into account. (Accepting that the porous asphalt itself is a more expensive surfacing, the extra cost of which is offset by the savings in underground pipework etc.) (Niemczynowicz, et al., 1987)

Table 2 gives US cost estimates for capital and maintenance costs of porous pavements (Landphair et al., 2000)

Table 2 Engineer's Estimate for Porous Pavement

Porous Pavement													
Item	Units	Price	Cycles/ Year	Quant. 1 Acre WS	Total	Quant. 2 Acre WS	Total	Quant. 3 Acre WS	Total	Quant. 4 Acre WS	Total	Quant. 5 Acre WS	Total
Grading	SY	$2.00		604	$1,208	1209	$2,418	1812	$3,624	2419	$4,838	3020	$6,040
Paving	SY	$19.00		212	$4,028	424	$8,056	636	$12,084	848	$16,112	1060	$20,140
Excavation	CY	$3.60		201	$724	403	$1,451	604	$2,174	806	$2,902	1008	$3,629
Filter Fabric	SY	$1.15		700	$805	1400	$1,610	2000	$2,300	2800	$3,220	3600	$4,140
Stone Fill	CY	$16.00		201	$3,216	403	$6,448	604	$9,664	806	$12,896	1008	$16,128
Sand	CY	$7.00		100	$700	200	$1,400	300	$2,100	400	$2,800	500	$3,500
Sight Well	EA	$300.00		2	$600	3	$900	4	$1,200	7	$2,100	7	$2,100
Seeding	LF	$0.05		644	$32	1288	$64	1932	$97	2576	$129	3220	$161
Check Dam	CY	$35.00		0	$0	0	$0	0	$0	0	$0	0	$0
Total Construction Costs					**$10,105**		**$19,929**		**$29,619**		**$40,158**		**$49,798**
Construction Costs Amortized for 20 Years					**$505**		**$996**		**$1,481**		**$2,008**		**$2,490**
Annual Maintenance Expense													
Item	Units	Price	Cycles/ Year	Quant. 1 Acre WS	Total	Quant. 2 Acre WS	Total	Quant. 3 Acre WS	Total	Quant. 4 Acre WS	Total	Quant. 5 Acre WS	Total
Sweeping	AC	$250.00	6	1	$1,500	2	$3,000	3	$4,500	4	$6,000	5	$7,500
Washing	AC	$250.00	6	1	$1,500	2	$3,000	3	$4,500	4	$6,000	5	$7,500
Inspection	MH	$20.00	5	5	$100	5	$100	5	$100	5	$100	5	$100
Deep Clean	AC	$450.00	0.5	1	$225	2	$450	3	$675	3.9	$878	5	$1,125
Total Annual Maintenance Expense					**$3,960**		**$7,792**		**$11,651**		**$15,483**		**$19,370**

Other Resources

Abbott C.L. and Comino-Mateos L. 2001. *In situ performance monitoring of an infiltration drainage system and field testing of current design procedures*. Journal CIWEM, 15(3), pp.198-202.

Construction Industry Research and Information Association (CIRIA). 2002. *Source Control using Constructed Pervious Surfaces C582*, London, SW1P 3AU.

Construction Industry Research and Information Association (CIRIA). 2000. *Sustainable urban drainage systems - design manual for Scotland and Northern Ireland Report C521*, London, SW1P 3AU.

Construction Industry Research and Information Association (CIRIA). 2000 C522 *Sustainable urban drainage systems - design manual for England and Wales*, London, SW1P 3AU.

Construction Industry Research and Information Association (CIRIA). *RP448 Manual of good practice for the design, construction and maintenance of infiltration drainage systems for stormwater runoff control and disposal*, London, SW1P 3AU.

Dierkes C., Kuhlmann L., Kandasamy J. & Angelis G. Pollution Retention Capability and Maintenance of Permeable Pavements. *Proc 9th International Conference on Urban Drainage, Portland Oregon, September 2002*.

Hart P (2002) Permeable Paving as a Stormwater Source Control System. *Paper presented at Scottish Hydraulics Study Group 14th* Annual seminar, SUDS. 22 March 2002, Glasgow.

Kobayashi M., 1999. Stormwater runoff control in Nagoya City. Proc. 8 th Int. Conf. on

Urban Storm Drainage, Sydney, Australia, pp.825-833.

Landphair, H., McFalls, J., Thompson, D., 2000, Design Methods, Selection, and Cost Effectiveness of Stormwater Quality Structures, Texas Transportation Institute Research Report 1837-1, College Station, Texas.

Legret M, Colandini V, Effects of a porous pavement with reservior strucutre on runoff water:water quality and the fate of heavy metals. Laboratoire Central Des Ponts et Chaussesss

Macdonald K. & Jefferies C. Performance Comparison of Porous Paved and Traditional Car Parks. *Proc. First National Conference on Sustainable Drainage Systems, Coventry June 2001*.

Niemczynowicz J, Hogland W, 1987: Test of porous pavements performed in Lund, Sweden, in Topics in Drainage Hydraulics and Hydrology. BC. Yen (Ed.), pub. Int. Assoc. For Hydraulic Research, pp 19-80.

Pratt C.J. SUSTAINABLE URBAN DRAINAGE – A Review of published material on the performance of various SUDS devices prepared for the UK Environment Agency. Coventry University, UK December 2001.

Pratt C.J., 1995. Infiltration drainage – case studies of UK practice. Project Report

22,Construction Industry Research and Information Association, London, SW1P 3AU; also known as National Rivers Authority R & D Note 485

Pratt. C. J., 1990. Permeable Pavements for Stormwater Quality Enhancement. In: Urban Stormwater Quality Enhancement - Source Control, retrofitting and combined sewer technology, Ed. H.C. Torno, ASCE, ISBN 087262 7594, pp. 131-155

Raimbault G., 1997 French Developments in Reservoir Structures Sustainable water resources I the 21st century. Malmo Sweden

Schlüter W. & Jefferies C. Monitoring the outflow from a *Porous Car Park Proc. First National Conference on Sustainable Drainage Systems, Coventry June 2001*.

Wild, T.C., Jefferies, C., and D'Arcy, B.J. SUDS in Scotland – the Scottish SUDS database Report No SR(02)09 *Scotland and Northern Ireland Forum for Environmental Research, Edinburgh*. In preparation August 2002.

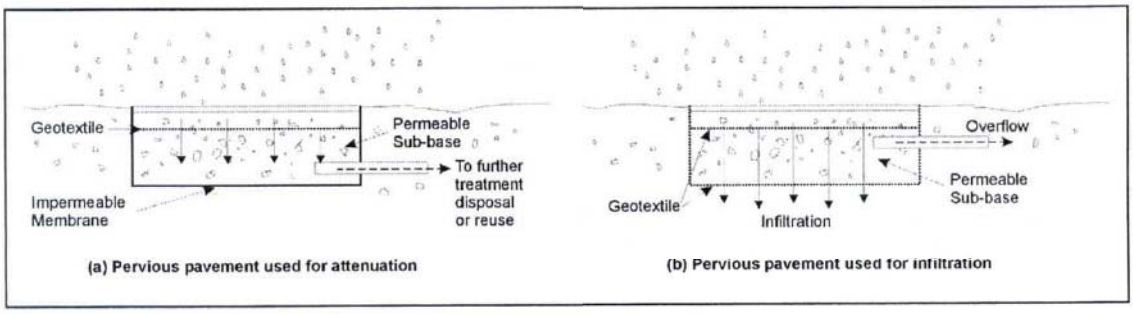

Schematics of a Pervious Pavement System

Infiltration Trench TC-10

Design Considerations

- Accumulation of Metals
- Clogged Soil Outlet Structures
- Vegetation/Landscape Maintenance

Description

An infiltration trench is a long, narrow, rock-filled trench with no outlet that receives stormwater runoff. Runoff is stored in the void space between the stones and infiltrates through the bottom and into the soil matrix. Infiltration trenches perform well for removal of fine sediment and associated pollutants. Pretreatment using buffer strips, swales, or detention basins is important for limiting amounts of coarse sediment entering the trench which can clog and render the trench ineffective.

Targeted Constituents

☑	Sediment	■
☑	Nutrients	■
☑	Trash	■
☑	Metals	■
☑	Bacteria	■
☑	Oil and Grease	■
☑	Organics	■

Legend ***(Removal Effectiveness)***

● Low ■ High

▲ Medium

California Experience

Caltrans constructed two infiltration trenches at highway maintenance stations in Southern California. Of these, one failed to operate to the design standard because of average soil infiltration rates lower than that measured in the single infiltration test. This highlights the critical need for appropriate evaluation of the site. Once in operation, little maintenance was required at either site.

Advantages

- Provides 100% reduction in the load discharged to surface waters.
- An important benefit of infiltration trenches is the approximation of pre-development hydrology during which a significant portion of the average annual rainfall runoff is infiltrated rather than flushed directly to creeks.
- If the water quality volume is adequately sized, infiltration trenches can be useful for providing control of channel forming (erosion) and high frequency (generally less than the 2-year) flood events.

CASQA
CALIFORNIA STORMWATER QUALITY ASSOCIATION

- As an underground BMP, trenches are unobtrusive and have little impact of site aesthetics.

Limitations

- Have a high failure rate if soil and subsurface conditions are not suitable.
- May not be appropriate for industrial sites or locations where spills may occur.
- The maximum contributing area to an individual infiltration practice should generally be less than 5 acres.
- Infiltration basins require a minimum soil infiltration rate of 0.5 inches/hour, not appropriate at sites with Hydrologic Soil Types C and D.
- If infiltration rates exceed 2.4 inches/hour, then the runoff should be fully treated prior to infiltration to protect groundwater quality.
- Not suitable on fill sites or steep slopes.
- Risk of groundwater contamination in very coarse soils.
- Upstream drainage area must be completely stabilized before construction.
- Difficult to restore functioning of infiltration trenches once clogged.

Design and Sizing Guidelines

- Provide pretreatment for infiltration trenches in order to reduce the sediment load. Pretreatment refers to design features that provide settling of large particles before runoff reaches a management practice, easing the long-term maintenance burden. Pretreatment is important for all structural stormwater management practices, but it is particularly important for infiltration practices. To ensure that pretreatment mechanisms are effective, designers should incorporate practices such as grassed swales, vegetated filter strips, detention, or a plunge pool in series.
- Specify locally available trench rock that is 1.5 to 2.5 inches in diameter.
- Determine the trench volume by assuming the WQV will fill the void space based on the computed porosity of the rock matrix (normally about 35%).
- Determine the bottom surface area needed to drain the trench within 72 hr by dividing the WQV by the infiltration rate.

$$d = \frac{WQV + RFV}{SA}$$

- Calculate trench depth using the following equation:

where:

D = Trench depth

WQV	=	Water quality volume
RFV	=	Rock fill volume
SA	=	Surface area of the trench bottom

- The use of vertical piping, either for distribution or infiltration enhancement shall not be allowed to avoid device classification as a Class V injection well per 40 CFR146.5(e)(4).
- Provide observation well to allow observation of drain time.
- May include a horizontal layer of filter fabric just below the surface of the trench to retain sediment and reduce the potential for clogging.

Construction/Inspection Considerations

Stabilize the entire area draining to the facility before construction begins. If impossible, place a diversion berm around the perimeter of the infiltration site to prevent sediment entrance during construction. Stabilize the entire contributing drainage area before allowing any runoff to enter once construction is complete.

Performance

Infiltration trenches eliminate the discharge of the water quality volume to surface receiving waters and consequently can be considered to have 100% removal of all pollutants within this volume. Transport of some of these constituents to groundwater is likely, although the attenuation in the soil and subsurface layers will be substantial for many constituents.

Infiltration trenches can be expected to remove up to 90 percent of sediments, metals, coliform bacteria and organic matter, and up to 60 percent of phosphorus and nitrogen in the infiltrated runoff (Schueler, 1992). Biochemical oxygen demand (BOD) removal is estimated to be between 70 to 80 percent. Lower removal rates for nitrate, chlorides and soluble metals should be expected, especially in sandy soils (Schueler, 1992). Pollutant removal efficiencies may be improved by using washed aggregate and adding organic matter and loam to the subsoil. The stone aggregate should be washed to remove dirt and fines before placement in the trench. The addition of organic material and loam to the trench subsoil may enhance metals removal through adsorption.

Siting Criteria

The use of infiltration trenches may be limited by a number of factors, including type of native soils, climate, and location of groundwater table. Site characteristics, such as excessive slope of the drainage area, fine-grained soil types, and proximate location of the water table and bedrock, may preclude the use of infiltration trenches. Generally, infiltration trenches are not suitable for areas with relatively impermeable soils containing clay and silt or in areas with fill.

As with any infiltration BMP, the potential for groundwater contamination must be carefully considered, especially if the groundwater is used for human consumption or agricultural purposes. The infiltration trench is not suitable for sites that use or store chemicals or hazardous materials unless hazardous and toxic materials are prevented from entering the trench. In these areas, other BMPs that do not allow interaction with the groundwater should be considered.

The potential for spills can be minimized by aggressive pollution prevention measures. Many municipalities and industries have developed comprehensive spill prevention control and countermeasure (SPCC) plans. These plans should be modified to include the infiltration trench and the contributing drainage area. For example, diversion structures can be used to prevent spills from entering the infiltration trench. Because of the potential to contaminate groundwater, extensive site investigation must be undertaken early in the site planning process to establish site suitability for the installation of an infiltration trench.

Longevity can be increased by careful geotechnical evaluation prior to construction and by designing and implementing an inspection and maintenance plan. Soil infiltration rates and the water table depth should be evaluated to ensure that conditions are satisfactory for proper operation of an infiltration trench. Pretreatment structures, such as a vegetated buffer strip or water quality inlet, can increase longevity by removing sediments, hydrocarbons, and other materials that may clog the trench. Regular maintenance, including the replacement of clogged aggregate, will also increase the effectiveness and life of the trench.

Evaluation of the viability of a particular site is the same as for infiltration basins and includes:

- Determine soil type (consider RCS soil type 'A, B or C' only) from mapping and consult USDA soil survey tables to review other parameters such as the amount of silt and clay, presence of a restrictive layer or seasonal high water table, and estimated permeability. The soil should not have more than 30 percent clay or more than 40 percent of clay and silt combined. Eliminate sites that are clearly unsuitable for infiltration.

- Groundwater separation should be at least 3 m from the basin invert to the measured ground water elevation. There is concern at the state and regional levels of the impact on groundwater quality from infiltrated runoff, especially when the separation between groundwater and the surface is small.

- Location away from buildings, slopes and highway pavement (greater than 6 m) and wells and bridge structures (greater than 30 m). Sites constructed of fill, having a base flow or with a slope greater than 15 percent should not be considered.

- Ensure that adequate head is available to operate flow splitter structures (to allow the basin to be offline) without ponding in the splitter structure or creating backwater upstream of the splitter.

- Base flow should not be present in the tributary watershed.

Secondary Screening Based on Site Geotechnical Investigation

- At least three in-hole conductivity tests shall be performed using USBR 7300-89 or Bouwer-Rice procedures (the latter if groundwater is encountered within the boring), two tests at different locations within the proposed basin and the third down gradient by no more than approximately 10 m. The tests shall measure permeability in the side slopes and the bed within a depth of 3 m of the invert.

- The minimum acceptable hydraulic conductivity as measured in any of the three required test holes is 13 mm/hr. If any test hole shows less than the minimum value, the site should be disqualified from further consideration.

- Exclude from consideration sites constructed in fill or partially in fill unless no silts or clays are present in the soil boring. Fill tends to be compacted, with clays in a dispersed rather than flocculated state, greatly reducing permeability.
- The geotechnical investigation should be such that a good understanding is gained as to how the stormwater runoff will move in the soil (horizontally or vertically) and if there are any geological conditions that could inhibit the movement of water.

Maintenance

Infiltration trenches required the least maintenance of any of the BMPs evaluated in the Caltrans study, with approximately 17 field hours spent on the operation and maintenance of each site. Inspection of the infiltration trench was the largest field activity, requiring approximately 8 hr/yr.

In addition to reduced water quality performance, clogged infiltration trenches with surface standing water can become a nuisance due to mosquito breeding. If the trench takes more than 72 hours to drain, then the rock fill should be removed and all dimensions of the trench should be increased by 2 inches to provide a fresh surface for infiltration.

Cost

Construction Cost

Infiltration trenches are somewhat expensive, when compared to other stormwater practices, in terms of cost per area treated. Typical construction costs, including contingency and design costs, are about $5 per ft^3 of stormwater treated (SWRPC, 1991; Brown and Schueler, 1997). Actual construction costs may be much higher. The average construction cost of two infiltration trenches installed by Caltrans in southern California was about $50/ft^3; however, these were constructed as retrofit installations.

Infiltration trenches typically consume about 2 to 3 percent of the site draining to them, which is relatively small. In addition, infiltration trenches can fit into thin, linear areas. Thus, they can generally fit into relatively unusable portions of a site.

Maintenance Cost

One cost concern associated with infiltration practices is the maintenance burden and longevity. If improperly sited or maintained, infiltration trenches have a high failure rate. In general, maintenance costs for infiltration trenches are estimated at between 5 percent and 20 percent of the construction cost. More realistic values are probably closer to the 20-percent range, to ensure long-term functionality of the practice.

References and Sources of Additional Information

Caltrans, 2002, BMP Retrofit Pilot Program Proposed Final Report, Rpt. CTSW-RT-01-050, California Dept. of Transportation, Sacramento, CA.

Brown, W., and T. Schueler. 1997. *The Economics of Stormwater BMPs in the Mid-Atlantic Region*. Prepared for the Chesapeake Research Consortium, Edgewater, MD, by the Center for Watershed Protection, Ellicott City, MD.

Galli, J. 1992. *Analysis of Urban BMP Performance and Longevity in Prince George's County, Maryland*. Metropolitan Washington Council of Governments, Washington, DC.

Maryland Department of the Environment (MDE). 2000. *Maryland Stormwater Design Manual*. http://www.mde.state.md.us/environment/wma/stormwatermanual. Accessed May 22, 2001.

Metzger, M. E., D. F. Messer, C. L. Beitia, C. M. Myers, and V. L. Kramer. 2002. The Dark Side Of Stormwater Runoff Management: Disease Vectors Associated With Structural BMPs. Stormwater 3(2): 24-39.

Schueler, T. 1987. *Controlling Urban Runoff: A Practical Manual for Planning and Designing Urban BMPs*. Metropolitan Washington Council of Governments, Washington, DC.

Southeastern Wisconsin Regional Planning Commission (SWRPC). 1991. *Costs of Urban Nonpoint Source Water Pollution Control Measures*. Southeastern Wisconsin Regional Planning Commission, Waukesha, WI.

Watershed Management Institute (WMI). 1997. *Operation, Maintenance, and Management of Stormwater Management Systems*. Prepared for U.S. Environmental Protection Agency, Office of Water, Washington, DC.

Information Resources

Center for Watershed Protection (CWP). 1997. *Stormwater BMP Design Supplement for Cold Climates*. Prepared for the U.S. Environmental Protection Agency, Office of Wetlands, Oceans and Watersheds, Washington, DC, by the Center for Watershed Protection, Ellicott City, MD.

Ferguson, B.K. 1994. *Stormwater Infiltration*. CRC Press, Ann Arbor, MI.

Minnesota Pollution Control Agency. 1989. *Protecting Water Quality in Urban Areas: Best Management Practices*. Minnesota Pollution Control Agency, Minneapolis, MN.

USEPA. 1993. *Guidance to Specify Management Measures for Sources of Nonpoint Pollution in Coastal Waters*. EPA-840-B-92-002. U.S. Environmental Protection Agency, Office of Water, Washington, DC.

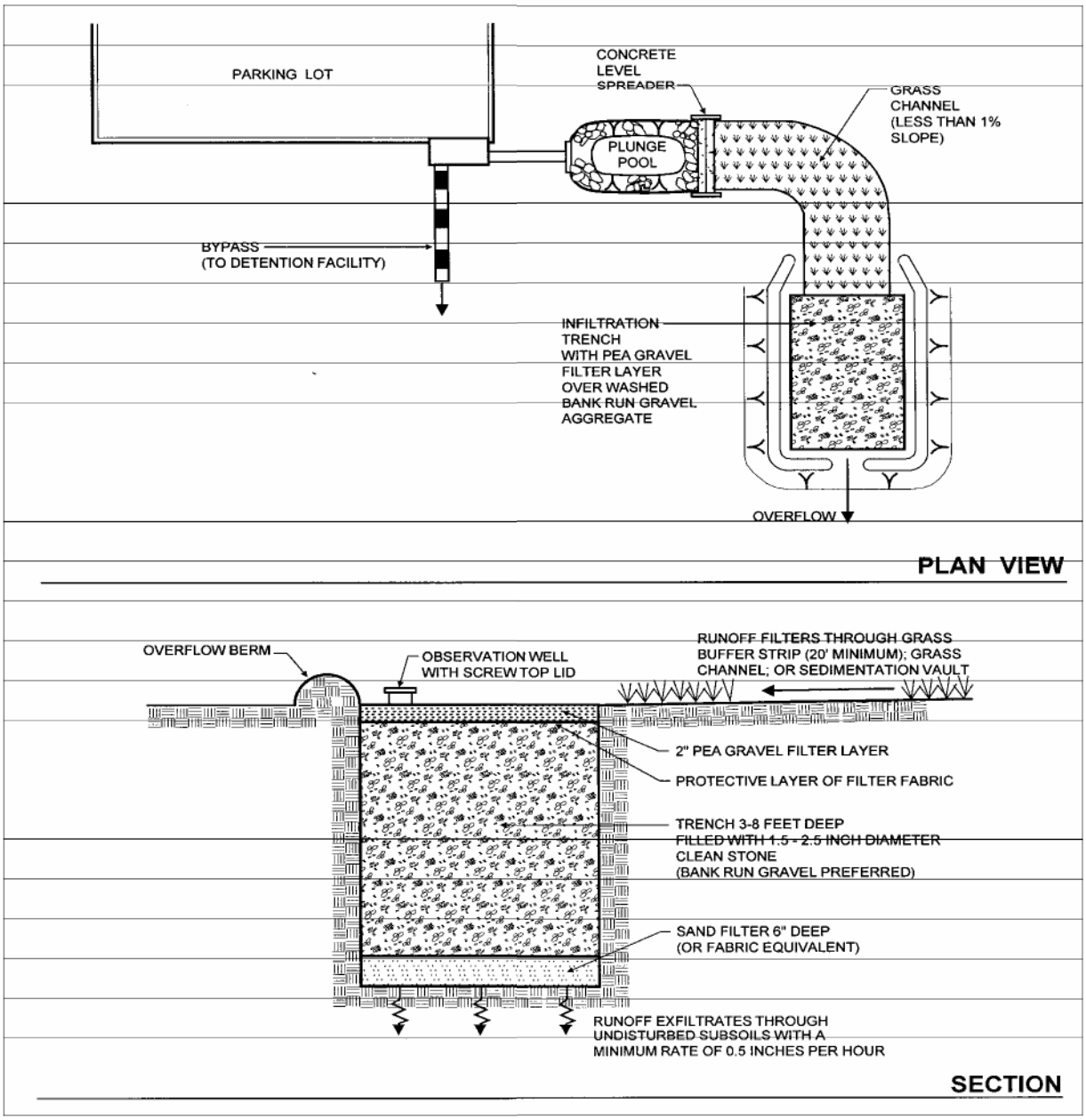
PARKING LOT
CONCRETE LEVEL SPREADER
GRASS CHANNEL (LESS THAN 1% SLOPE)
PLUNGE POOL
BYPASS (TO DETENTION FACILITY)
INFILTRATION TRENCH WITH PEA GRAVEL FILTER LAYER OVER WASHED BANK RUN GRAVEL AGGREGATE
OVERFLOW
PLAN VIEW
OVERFLOW BERM
OBSERVATION WELL WITH SCREW TOP LID
RUNOFF FILTERS THROUGH GRASS BUFFER STRIP (20' MINIMUM); GRASS CHANNEL; OR SEDIMENTATION VAULT
2" PEA GRAVEL FILTER LAYER
PROTECTIVE LAYER OF FILTER FABRIC
TRENCH 3-8 FEET DEEP FILLED WITH 1.5 - 2.5 INCH DIAMETER CLEAN STONE (BANK RUN GRAVEL PREFERRED)
SAND FILTER 6" DEEP (OR FABRIC EQUIVALENT)
RUNOFF EXFILTRATES THROUGH UNDISTURBED SUBSOILS WITH A MINIMUM RATE OF 0.5 INCHES PER HOUR
SECTION

Bioretention TC-32

Design Considerations

- Soil for Infiltration
- Tributary Area
- Slope
- Aesthetics
- Environmental Side-effects

Description

The bioretention best management practice (BMP) functions as a soil and plant-based filtration device that removes pollutants through a variety of physical, biological, and chemical treatment processes. These facilities normally consist of a grass buffer strip, sand bed, ponding area, organic layer or mulch layer, planting soil, and plants. The runoff's velocity is reduced by passing over or through buffer strip and subsequently distributed evenly along a ponding area. Exfiltration of the stored water in the bioretention area planting soil into the underlying soils occurs over a period of days.

Targeted Constituents

☑	Sediment	■
☑	Nutrients	▲
☑	Trash	■
☑	Metals	■
☑	Bacteria	■
☑	Oil and Grease	■
☑	Organics	■

Legend ***(Removal Effectiveness)***

● Low ■ High

▲ Medium

California Experience

None documented. Bioretention has been used as a stormwater BMP since 1992. In addition to Prince George's County, MD and Alexandria, VA, bioretention has been used successfully at urban and suburban areas in Montgomery County, MD; Baltimore County, MD; Chesterfield County, VA; Prince William County, VA; Smith Mountain Lake State Park, VA; and Cary, NC.

Advantages

- Bioretention provides stormwater treatment that enhances the quality of downstream water bodies by temporarily storing runoff in the BMP and releasing it over a period of four days to the receiving water (EPA, 1999).
- The vegetation provides shade and wind breaks, absorbs noise, and improves an area's landscape.

Limitations

- The bioretention BMP is not recommended for areas with slopes greater than 20% or where mature tree removal would

CASQA
CALIFORNIA STORMWATER QUALITY ASSOCIATION

be required since clogging may result, particularly if the BMP receives runoff with high sediment loads (EPA, 1999).

- Bioretention is not a suitable BMP at locations where the water table is within 6 feet of the ground surface and where the surrounding soil stratum is unstable.
- By design, bioretention BMPs have the potential to create very attractive habitats for mosquitoes and other vectors because of highly organic, often heavily vegetated areas mixed with shallow water.
- In cold climates the soil may freeze, preventing runoff from infiltrating into the planting soil.

Design and Sizing Guidelines

- The bioretention area should be sized to capture the design storm runoff.
- In areas where the native soil permeability is less than 0.5 in/hr an underdrain should be provided.
- Recommended minimum dimensions are 15 feet by 40 feet, although the preferred width is 25 feet. Excavated depth should be 4 feet.
- Area should drain completely within 72 hours.
- Approximately 1 tree or shrub per 50 ft^2 of bioretention area should be included.
- Cover area with about 3 inches of mulch.

Construction/Inspection Considerations

Bioretention area should not be established until contributing watershed is stabilized.

Performance

Bioretention removes stormwater pollutants through physical and biological processes, including adsorption, filtration, plant uptake, microbial activity, decomposition, sedimentation and volatilization (EPA, 1999). Adsorption is the process whereby particulate pollutants attach to soil (e.g., clay) or vegetation surfaces. Adequate contact time between the surface and pollutant must be provided for in the design of the system for this removal process to occur. Thus, the infiltration rate of the soils must not exceed those specified in the design criteria or pollutant removal may decrease. Pollutants removed by adsorption include metals, phosphorus, and hydrocarbons. Filtration occurs as runoff passes through the bioretention area media, such as the sand bed, ground cover, and planting soil.

Common particulates removed from stormwater include particulate organic matter, phosphorus, and suspended solids. Biological processes that occur in wetlands result in pollutant uptake by plants and microorganisms in the soil. Plant growth is sustained by the uptake of nutrients from the soils, with woody plants locking up these nutrients through the seasons. Microbial activity within the soil also contributes to the removal of nitrogen and organic matter. Nitrogen is removed by nitrifying and denitrifying bacteria, while aerobic bacteria are responsible for the decomposition of the organic matter. Microbial processes require oxygen and can result in depleted oxygen levels if the bioretention area is not adequately

aerated. Sedimentation occurs in the swale or ponding area as the velocity slows and solids fall out of suspension.

The removal effectiveness of bioretention has been studied during field and laboratory studies conducted by the University of Maryland (Davis et al, 1998). During these experiments, synthetic stormwater runoff was pumped through several laboratory and field bioretention areas to simulate typical storm events in Prince George's County, MD. Removal rates for heavy metals and nutrients are shown in Table 1.

Table 1 Laboratory and Estimated Bioretention Davis et al. (1998); PGDER (1993)

Pollutant	Removal Rate
Total Phosphorus	70-83%
Metals (Cu, Zn, Pb)	93-98%
TKN	68-80%
Total Suspended Solids	90%
Organics	90%
Bacteria	90%

Results for both the laboratory and field experiments were similar for each of the pollutants analyzed. Doubling or halving the influent pollutant levels had little effect on the effluent pollutants concentrations (Davis et al, 1998).

The microbial activity and plant uptake occurring in the bioretention area will likely result in higher removal rates than those determined for infiltration BMPs.

Siting Criteria

Bioretention BMPs are generally used to treat stormwater from impervious surfaces at commercial, residential, and industrial areas (EPA, 1999). Implementation of bioretention for stormwater management is ideal for median strips, parking lot islands, and swales. Moreover, the runoff in these areas can be designed to either divert directly into the bioretention area or convey into the bioretention area by a curb and gutter collection system.

The best location for bioretention areas is upland from inlets that receive sheet flow from graded areas and at areas that will be excavated (EPA, 1999). In order to maximize treatment effectiveness, the site must be graded in such a way that minimizes erosive conditions as sheet flow is conveyed to the treatment area. Locations where a bioretention area can be readily incorporated into the site plan without further environmental damage are preferred. Furthermore, to effectively minimize sediment loading in the treatment area, bioretention only should be used in stabilized drainage areas.

Additional Design Guidelines

The layout of the bioretention area is determined after site constraints such as location of utilities, underlying soils, existing vegetation, and drainage are considered (EPA, 1999). Sites with loamy sand soils are especially appropriate for bioretention because the excavated soil can be backfilled and used as the planting soil, thus eliminating the cost of importing planting soil.

The use of bioretention may not be feasible given an unstable surrounding soil stratum, soils with clay content greater than 25 percent, a site with slopes greater than 20 percent, and/or a site with mature trees that would be removed during construction of the BMP.

Bioretention can be designed to be off-line or on-line of the existing drainage system (EPA, 1999). The drainage area for a bioretention area should be between 0.1 and 0.4 hectares (0.25 and 1.0 acres). Larger drainage areas may require multiple bioretention areas. Furthermore, the maximum drainage area for a bioretention area is determined by the expected rainfall intensity and runoff rate. Stabilized areas may erode when velocities are greater than 5 feet per second (1.5 meter per second). The designer should determine the potential for erosive conditions at the site.

The size of the bioretention area, which is a function of the drainage area and the runoff generated from the area is sized to capture the water quality volume.

The recommended minimum dimensions of the bioretention area are 15 feet (4.6 meters) wide by 40 feet (12.2 meters) long, where the minimum width allows enough space for a dense, randomly-distributed area of trees and shrubs to become established. Thus replicating a natural forest and creating a microclimate, thereby enabling the bioretention area to tolerate the effects of heat stress, acid rain, runoff pollutants, and insect and disease infestations which landscaped areas in urban settings typically are unable to tolerate. The preferred width is 25 feet (7.6 meters), with a length of twice the width. Essentially, any facilities wider than 20 feet (6.1 meters) should be twice as long as they are wide, which promotes the distribution of flow and decreases the chances of concentrated flow.

In order to provide adequate storage and prevent water from standing for excessive periods of time the ponding depth of the bioretention area should not exceed 6 inches (15 centimeters). Water should not be left to stand for more than 72 hours. A restriction on the type of plants that can be used may be necessary due to some plants' water intolerance. Furthermore, if water is left standing for longer than 72 hours mosquitoes and other insects may start to breed.

The appropriate planting soil should be backfilled into the excavated bioretention area. Planting soils should be sandy loam, loamy sand, or loam texture with a clay content ranging from 10 to 25 percent.

Generally the soil should have infiltration rates greater than 0.5 inches (1.25 centimeters) per hour, which is typical of sandy loams, loamy sands, or loams. The pH of the soil should range between 5.5 and 6.5, where pollutants such as organic nitrogen and phosphorus can be adsorbed by the soil and microbial activity can flourish. Additional requirements for the planting soil include a 1.5 to 3 percent organic content and a maximum 500 ppm concentration of soluble salts.

Soil tests should be performed for every 500 cubic yards (382 cubic meters) of planting soil, with the exception of pH and organic content tests, which are required only once per bioretention area (EPA, 1999). Planting soil should be 4 inches (10.1 centimeters) deeper than the bottom of the largest root ball and 4 feet (1.2 meters) altogether. This depth will provide adequate soil for the plants' root systems to become established, prevent plant damage due to severe wind, and provide adequate moisture capacity. Most sites will require excavation in order to obtain the recommended depth.

Planting soil depths of greater than 4 feet (1.2 meters) may require additional construction practices such as shoring measures (EPA, 1999). Planting soil should be placed in 18 inches or greater lifts and lightly compacted until the desired depth is reached. Since high canopy trees may be destroyed during maintenance the bioretention area should be vegetated to resemble a terrestrial forest community ecosystem that is dominated by understory trees. Three species each of both trees and shrubs are recommended to be planted at a rate of 2500 trees and shrubs per hectare (1000 per acre). For instance, a 15 foot (4.6 meter) by 40 foot (12.2 meter) bioretention area (600 square feet or 55.75 square meters) would require 14 trees and shrubs. The shrub-to-tree ratio should be 2:1 to 3:1.

Trees and shrubs should be planted when conditions are favorable. Vegetation should be watered at the end of each day for fourteen days following its planting. Plant species tolerant of pollutant loads and varying wet and dry conditions should be used in the bioretention area.

The designer should assess aesthetics, site layout, and maintenance requirements when selecting plant species. Adjacent non-native invasive species should be identified and the designer should take measures, such as providing a soil breach to eliminate the threat of these species invading the bioretention area. Regional landscaping manuals should be consulted to ensure that the planting of the bioretention area meets the landscaping requirements established by the local authorities. The designers should evaluate the best placement of vegetation within the bioretention area. Plants should be placed at irregular intervals to replicate a natural forest. Trees should be placed on the perimeter of the area to provide shade and shelter from the wind. Trees and shrubs can be sheltered from damaging flows if they are placed away from the path of the incoming runoff. In cold climates, species that are more tolerant to cold winds, such as evergreens, should be placed in windier areas of the site.

Following placement of the trees and shrubs, the ground cover and/or mulch should be established. Ground cover such as grasses or legumes can be planted at the beginning of the growing season. Mulch should be placed immediately after trees and shrubs are planted. Two to 3 inches (5 to 7.6 cm) of commercially-available fine shredded hardwood mulch or shredded hardwood chips should be applied to the bioretention area to protect from erosion.

Maintenance

The primary maintenance requirement for bioretention areas is that of inspection and repair or replacement of the treatment area's components. Generally, this involves nothing more than the routine periodic maintenance that is required of any landscaped area. Plants that are appropriate for the site, climatic, and watering conditions should be selected for use in the bioretention cell. Appropriately selected plants will aide in reducing fertilizer, pesticide, water, and overall maintenance requirements. Bioretention system components should blend over time through plant and root growth, organic decomposition, and the development of a natural

soil horizon. These biologic and physical processes over time will lengthen the facility's life span and reduce the need for extensive maintenance.

Routine maintenance should include a biannual health evaluation of the trees and shrubs and subsequent removal of any dead or diseased vegetation (EPA, 1999). Diseased vegetation should be treated as needed using preventative and low-toxic measures to the extent possible. BMPs have the potential to create very attractive habitats for mosquitoes and other vectors because of highly organic, often heavily vegetated areas mixed with shallow water. Routine inspections for areas of standing water within the BMP and corrective measures to restore proper infiltration rates are necessary to prevent creating mosquito and other vector habitat. In addition, bioretention BMPs are susceptible to invasion by aggressive plant species such as cattails, which increase the chances of water standing and subsequent vector production if not routinely maintained.

In order to maintain the treatment area's appearance it may be necessary to prune and weed. Furthermore, mulch replacement is suggested when erosion is evident or when the site begins to look unattractive. Specifically, the entire area may require mulch replacement every two to three years, although spot mulching may be sufficient when there are random void areas. Mulch replacement should be done prior to the start of the wet season.

New Jersey's Department of Environmental Protection states in their bioretention systems standards that accumulated sediment and debris removal (especially at the inflow point) will normally be the primary maintenance function. Other potential tasks include replacement of dead vegetation, soil pH regulation, erosion repair at inflow points, mulch replenishment, unclogging the underdrain, and repairing overflow structures. There is also the possibility that the cation exchange capacity of the soils in the cell will be significantly reduced over time. Depending on pollutant loads, soils may need to be replaced within 5-10 years of construction (LID, 2000).

Cost

Construction Cost

Construction cost estimates for a bioretention area are slightly greater than those for the required landscaping for a new development (EPA, 1999). A general rule of thumb (Coffman, 1999) is that residential bioretention areas average about $3 to $4 per square foot, depending on soil conditions and the density and types of plants used. Commercial, industrial and institutional site costs can range between $10 to $40 per square foot, based on the need for control structures, curbing, storm drains and underdrains.

Retrofitting a site typically costs more, averaging $6,500 per bioretention area. The higher costs are attributed to the demolition of existing concrete, asphalt, and existing structures and the replacement of fill material with planting soil. The costs of retrofitting a commercial site in Maryland, Kettering Development, with 15 bioretention areas were estimated at $111,600.

In any bioretention area design, the cost of plants varies substantially and can account for a significant portion of the expenditures. While these cost estimates are slightly greater than those of typical landscaping treatment (due to the increased number of plantings, additional soil excavation, backfill material, use of underdrains etc.), those landscaping expenses that would be required regardless of the bioretention installation should be subtracted when determining the net cost.

Perhaps of most importance, however, the cost savings compared to the use of traditional structural stormwater conveyance systems makes bioretention areas quite attractive financially. For example, the use of bioretention can decrease the cost required for constructing stormwater conveyance systems at a site. A medical office building in Maryland was able to reduce the amount of storm drain pipe that was needed from 800 to 230 feet - a cost savings of $24,000 (PGDER, 1993). And a new residential development spent a total of approximately $100,000 using bioretention cells on each lot instead of nearly $400,000 for the traditional stormwater ponds that were originally planned (Rappahanock,). Also, in residential areas, stormwater management controls become a part of each property owner's landscape, reducing the public burden to maintain large centralized facilities.

Maintenance Cost

The operation and maintenance costs for a bioretention facility will be comparable to those of typical landscaping required for a site. Costs beyond the normal landscaping fees will include the cost for testing the soils and may include costs for a sand bed and planting soil.

References and Sources of Additional Information

Coffman, L.S., R. Goo and R. Frederick, 1999: Low impact development: an innovative alternative approach to stormwater management. Proceedings of the 26th Annual Water Resources Planning and Management Conference ASCE, June 6-9, Tempe, Arizona.

Davis, A.P., Shokouhian, M., Sharma, H. and Minami, C., "Laboratory Study of Biological Retention (Bioretention) for Urban Stormwater Management," *Water Environ. Res.*, 73(1), 5-14 (2001).

Davis, A.P., Shokouhian, M., Sharma, H., Minami, C., and Winogradoff, D. "Water Quality Improvement through Bioretention: Lead, Copper, and Zinc," *Water Environ. Res.*, accepted for publication, August 2002.

Kim, H., Seagren, E.A., and Davis, A.P., "Engineered Bioretention for Removal of Nitrate from Stormwater Runoff," *WEFTEC 2000 Conference Proceedings on CDROM Research Symposium, Nitrogen Removal*, Session 19, Anaheim CA, October 2000.

Hsieh, C.-h. and Davis, A.P. "Engineering Bioretention for Treatment of Urban Stormwater Runoff," *Watersheds 2002, Proceedings on CDROM Research Symposium*, Session 15, Ft. Lauderdale, FL, Feb. 2002.

Prince George's County Department of Environmental Resources (PGDER), 1993. Design Manual for Use of *Bioretention in Stormwater Management*. Division of Environmental Management, Watershed Protection Branch. Landover, MD.

U.S. EPA Office of Water, 1999. Stormwater Technology Fact Sheet: Bioretention. EPA 832-F-99-012.

Weinstein, N. Davis, A.P. and Veeramachaneni, R. "Low Impact Development (LID) Stormwater Management Approach for the Control of Diffuse Pollution from Urban Roadways," *5th International Conference Diffuse/Nonpoint Pollution and Watershed Management Proceedings*, C.S. Melching and Emre Alp, Eds. 2001 International Water Association

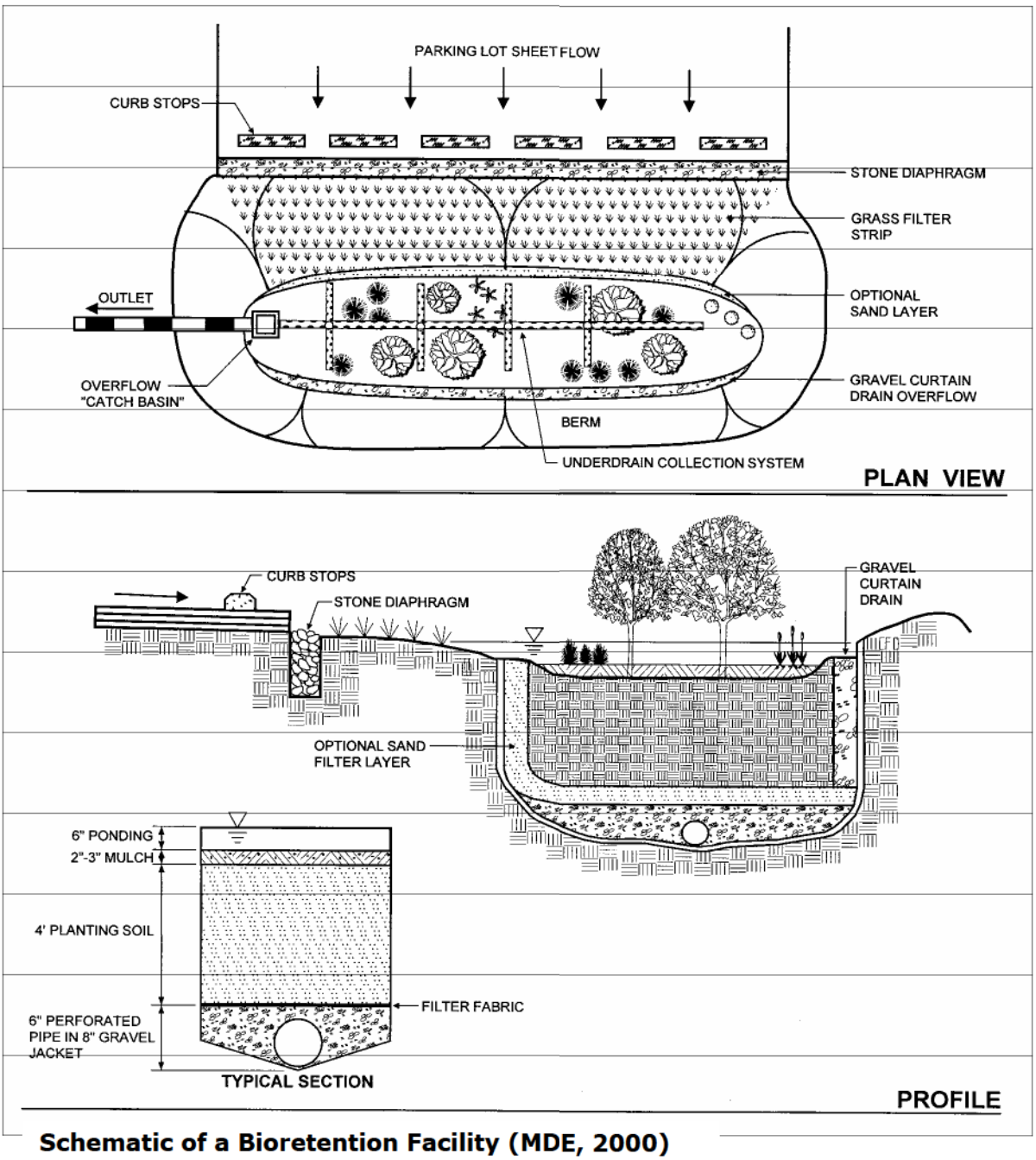

Schematic of a Bioretention Facility (MDE, 2000)