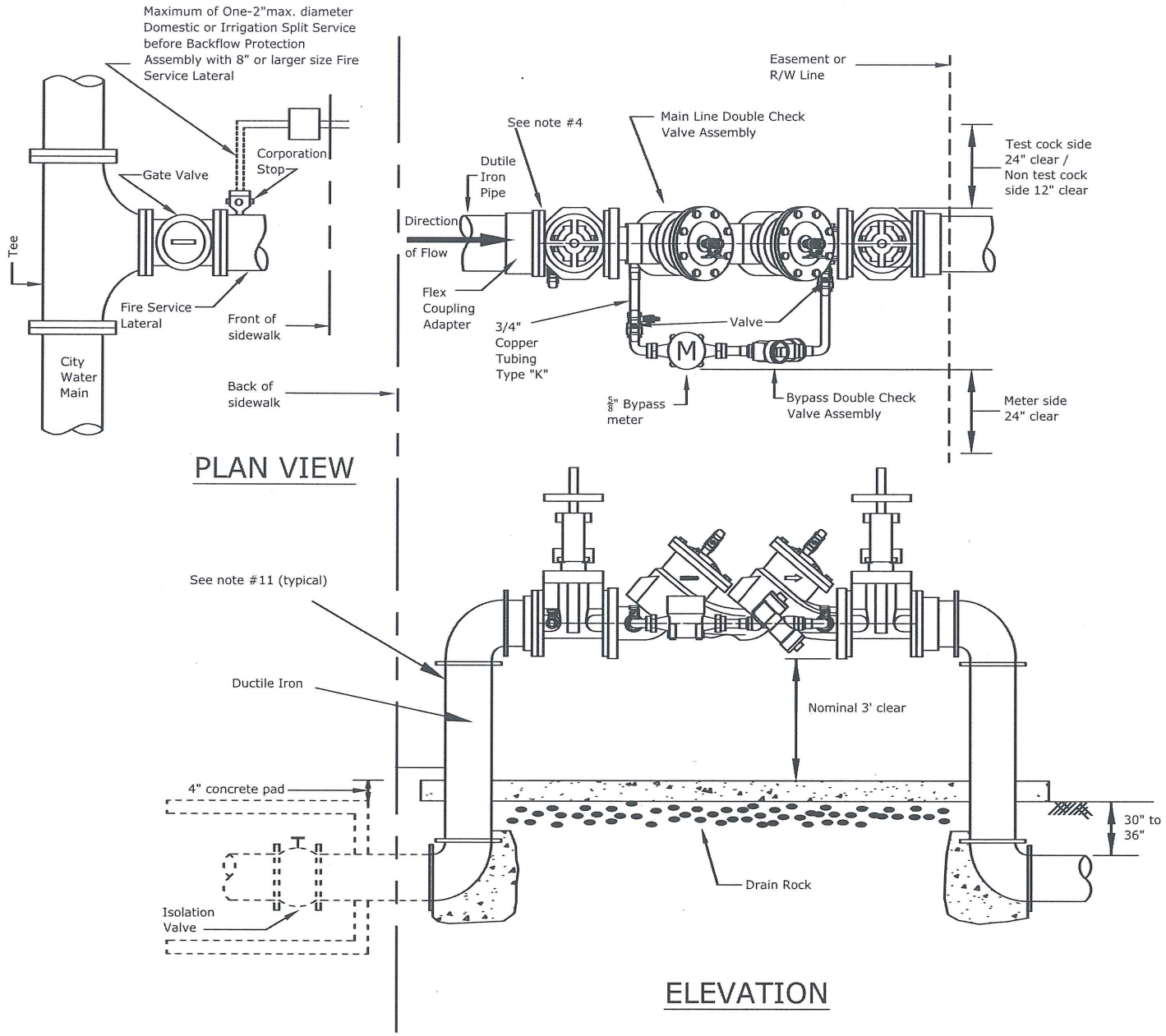

Notes:

1. All buried metal pipe and fittings shall be covered by two coats of mastic with a thickness of 15 mil. Stainless steel bolts, nuts, and washers shall be used on all flanged fittings.
2. Concrete slab to be 4" thick(min.).
3. Drain rock to be 4" thick.
4. Contractor shall install a Calpico full face gasket $\frac{1}{8}$" thick (Fiberglass epoxy) Isolation sleeve/bushing/kit or equivalent for the tapping flange in upstream elbow of the backflow device between City's metallic service and on-site fire facilities at all metallic water main locations.

NOT TO SCALE

CITY OF MILPITAS, ENGINEERING DIVISION			STANDARD DRAWING No.730
REVISION	DATE	DOUBLE CHECK DETECTOR BACKFLOW PREVENTION ASSEMBLY INSTALLATION FOR ON-SITE FIRE SERVICE	DATE : 2/1/16
		APPROVED BY: CITY ENGINEER RCE No.38441	SHEET 1 OF 2

NOTES:

1. The bypass meter shall be purchased from National Meter and Automation, Inc. (Phone: 707.575.0700) by customer and installed by customer's contractor, subject to meter and backflow inspection process.
2. GPS location shall be submitted with backflow certifications to the City
3. The bypass meter shall also be protected by the same equivalent backflow assembly. (see drawing)
4. The bypass meter and backflow assemblies shall be located behind the back of sidewalk within City right of way/easement. Also see approved plans for locations. Obtain approval of location of meter/backflow in the field after USA verification before installation work.
5. The double check detector assemblies shall be per City approved equal list as shown on current USC Foundation List of Approved Backflow Prevention Assemblies. It must have resilient seated shut off valves and test cocks as integral parts of the assembly.
6. The backflow assemblies must be accessible for testing and maintenance.
7. The backflow assembly must be installed and operated in accordance with AWWA Standards and all federal, state, local requirements.
8. Reduced pressure principle detector assembly shall be used when the fire service includes pump, pressurized/elevated tank, alternate water supply and/or chemical.
9. The maximum size of a split service is one-2" diameter per City Standard (meter and backflow) with 8" or larger size fire service when approved.
10. Saddle supports and concrete pad are required per manufacturer's specification.
11. All metallic services shall be protected from exterior corrosion; use poly-wrap or mastic.
12. An isolation valve must be installed upstream of the backflow assemblies and bypass meter.
13. The endpoint/transmitter of the meter register shall be securely clamped and protected from vandalism per City Std Dwg #729.

CITY OF MILPITAS, ENGINEERING DIVISION			STANDARD DRAWING
REVISION	DATE	DOUBLE CHECK DETECTOR BACKFLOW PREVENTION ASSEMBLY INSTALLATION FOR ON-SITE FIRE SERVICE	No.730
			DATE : 2/1/16
		APPROVED BY:	
		CITY ENGINEER RCE No.38441	SHEET 2 OF 2