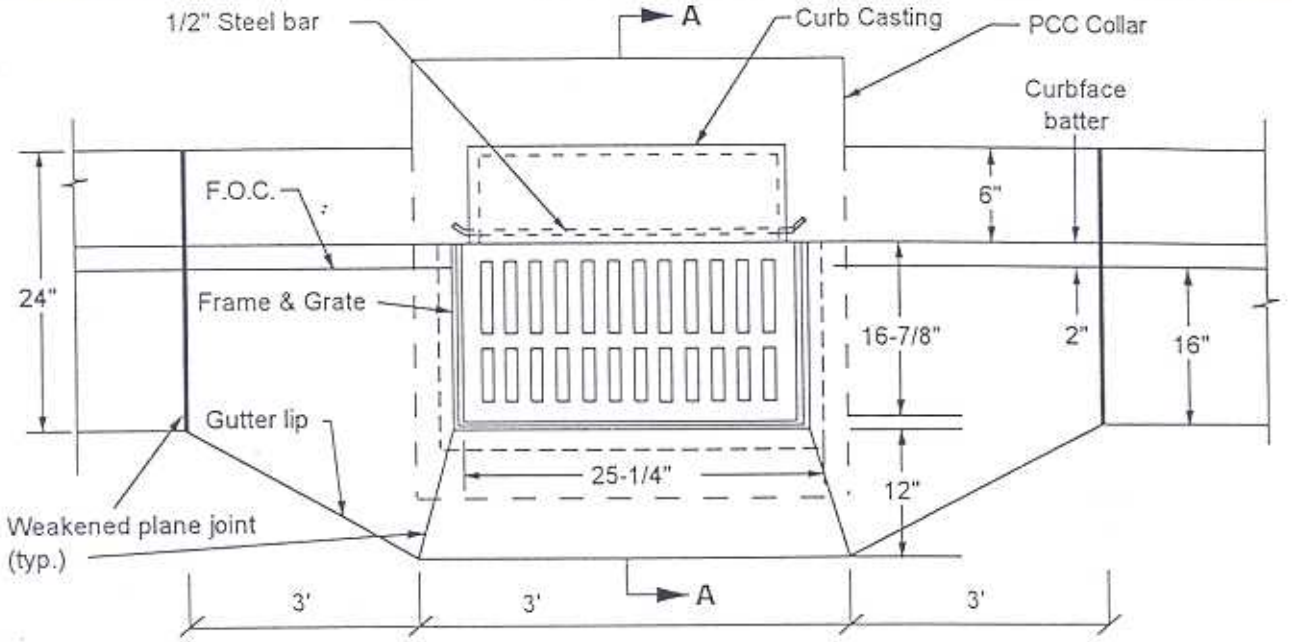

PLAN

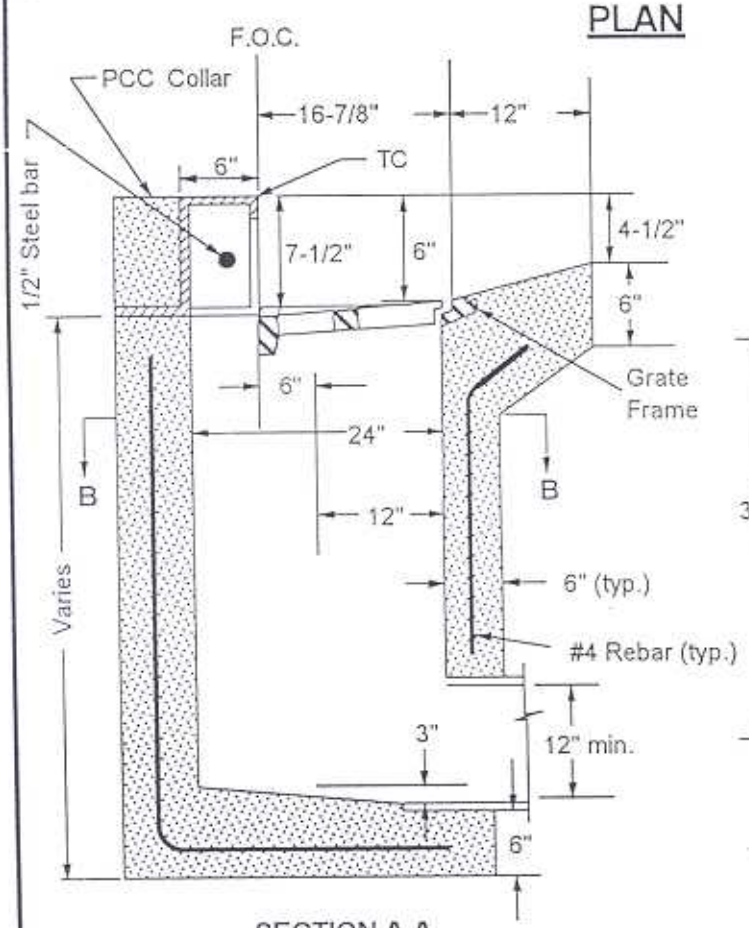

SECTION A-A

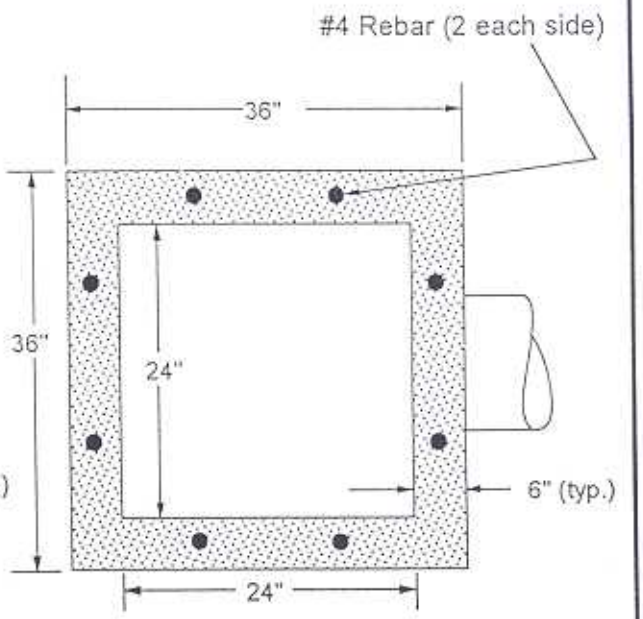

SECTION B-B

NOTES:

1. Curb casting, gutter frame and grate shall be South Bay Foundry SBF1901 or Phoenix Iron Works No. P-6001 or approved equal.
2. PCC Collar shall not be constructed where sidewalk is contiguous to back of curb.
3. All PCC shall be 'Class A' (6 sack/c-y.), or approved 3000 PSI mix.

REV	DATE	APPROVED				
			DESIGN M.K.	CITY OF MILPITAS	CURB STORM DRAIN INLET	NO. 462
			DRAWN T.S.	PUBLIC WORKS DEPARTMENT ENGINEERING DIVISION STANDARD DRAWING		ADOPTED
			CHECKED J.K.			DATE: 11/13/97
			APPROVED BY [signature] CITY ENGINEER			SHEET 1 OF 1
			DATE 12/16/97			