MILPITAS CIVIC CENTER

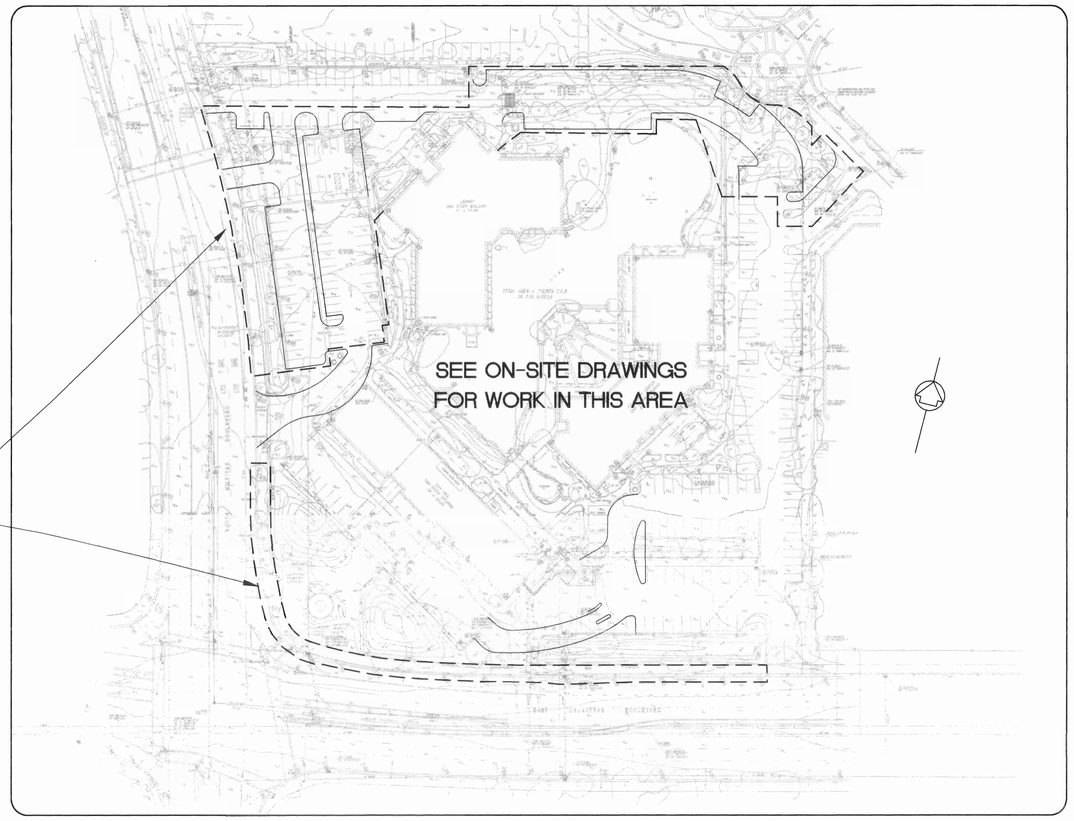

PROJECT SITE MAP
NOT TO SCALE

PARKING, CIRCULATION, AND STREETSCAPE RENOVATION

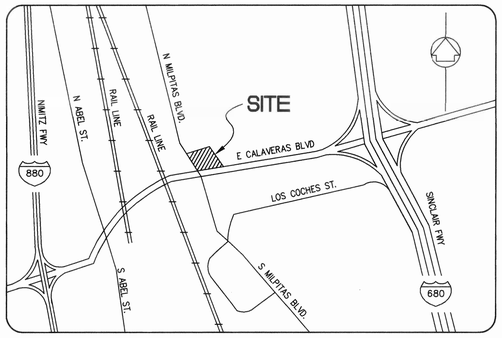

VICINITY MAP
NOT TO SCALE

milpitas civic cen
parking, circulation &
streetscape renovation
8143, 4140, & 4194

STUDIOS
architecture
919 GREEN ST. SAN FRANCISCO, CA. 94111 415.398.7575

Associate Architect
Michael Willis Architects

Landscape Architect
SWA Group

Engineers
Sandis Humber Jones

ISSUE FOR:	DATE:
100% construction documents	6.5.01

N

Cover Sheet

C0.0

PROJECT NO. 99540.00
SHJ PROJECT NO. 299203

File:X:\P\299203\CD\OFF-SITE\C0.0.DWG Date: JUN 04, 2001 Time:4:26PM

Milpitas City Hall 99540.00 A2261

LEGEND

	EXISTING	PROPOSED
PROPERTY LINE		
CURB, GUTTER AND SIDEWALK		
CENTER LINE		
SAWCUT LINE		
ASPHALTIC PAVEMENT		
CONCRETE PAVEMENT		
SANITARY SEWER MAIN	SS	SS
SANITARY SEWER MANHOLE		
SANITARY SEWER CLEANOUT	SSCO	SSCO
STORM DRAIN MAIN	SD	SD
STORM DRAIN MANHOLE		
STORM DRAIN CATCH BASIN		
STORM DRAIN JUNCTION BOX		JB
AREA DRAIN (PLAZA)		
AREA DRAIN (LANDSCAPE)		
STORM DRAIN CLEANOUT	SSCO	SSCO
FIRE WATER MAIN		FW
WATER MAIN		
DOMESTIC WATER MAIN		DW
WATER VALVE	WV	WV
WATER METER		WM
POST INDICATOR VALVE		PIV
FIRE HYDRANT		
FIRE DEPARTMENT CONNECTION		FDC
BACKFLOW PREVENTOR		
REDUCER		
WATER TEE		
WATER CROSS		
ELECTRIC LINE	E	
UNDERGROUND ELECTRIC LINE	UE	
JOINT TRENCH	JT	
PULL BOX	PB	
POWER POLE	PP	
STREET LIGHT CONDUIT	SL	
ELECTROLIER		
TELEPHONE CONDUIT		
GAS MAIN		G
GAS VALVE	GV	GV
CABLE TELEVISION LINE		
STREET SIGN		
MONUMENT		
TREE		
TREE TO BE REMOVED		
CONTOURS	12	50
SPOT ELEVATIONS	15.3	TC 53.5 / FL 53.0
GRADE TO DRAIN		
RAIN WATER LEADER		RWL

A — DETAIL NUMBER
C-6 — SHEET NUMBER

ABBREVIATIONS

AB	AGGREGATE BASE
AC	ASPHALTIC CONCRETE
AD	AREA DRAIN
BC	BEGINNING OF CURVE
BFP	BACKFLOW PREVENTOR
BFV	BACKFLOW VALVE
BVC	BEGIN VERTICAL CURVE
BW	BOTTOM OF WALL
CB	CATCH BASIN
℄	CENTERLINE
CO	CLEANOUT
CONC	CONCRETE
CONST	CONSTRUCTION OR CONSTRUCT
CTV	CABLE TELEVISION
DDC	DOUBLE CHECK VALVE ASSEMBLY
DI	DRAIN INLET
DIP	DUCTILE PIPE
DW	DOMESTIC WATER
EC	END OF CURVE
EP	EDGE OF PAVEMENT
EVC	END VERTICAL CURVE
ELEV	ELEVATION
EX-EXIST	EXISTING
FF	FINISHED FLOOR
FG	FINISH GRADE
FH	FIRE HYDRANT
FL	FLOW LINE
FW	FIRE WATER
GB	GRADE BREAK
GV	GAS VALVE
HP	HIGH POINT
INV	INVERT ELEVATION
JB	JUNCTION BOX
LF	LINEAR FEET
MH	MANHOLE
P	PAVEMENT
PP	POWER POLE
PL	PROPERTY LINE
PCC	PORTLAND CEMENT CONCRETE
PCC	POINT OF COMPOUND CURVE
PVC	POLYVINYL CHLORIDE PIPE
PB	PULLBOX
RCP	REINFORCED CONCRETE PIPE
RPPA	REDUCED PRESSURE PRINCIPLE ASSEMBLY
RWL	RAIN WATER LEADER
SD	STORM DRAIN
SS	SANITARY SEWER
STA	STATION
STD	STANDARD
TC	TOP OF CURB
TS	TOP OF SLAB
TW	TOP OF WALL
TYP.	TYPICAL
VCP	VITRIFIED CLAY PIPE
UE	UNDERGROUND ELECTRICAL
WM	WATER METER
WV	WATER VALVE

Notes, Legend & Abbreviations

CONSTRUCTION NOTES

1. ALL CONSTRUCTION MATERIALS AND METHODS SHALL COMPLY WITH THE APPLICABLE SECTIONS OF THE LATEST EDITION OF THE STATE OF CALIFORNIA STANDARD SPECIFICATIONS (JULY 92, ENGLISH UNITS)
2. CONTRACTOR SHALL NOTIFY THE CITY PROJECT MANAGER AT LEAST TWO WORKING DAYS PRIOR TO COMMENCEMENT OF WORK OR IF WORK HAS BEEN SUSPENDED FOR A PERIOD OF MORE THAN THREE DAYS. ALL PROJECT OWNERS, CONTRACTORS AND/OR DEVELOPERS ARE REQUIRED TO CALL FOR INSPECTIONS A MINIMUM OF TWO (2) WORKING DAYS IN ADVANCE OF THE REQUIRED INSPECTION TIME.
3. CONTRACTOR SHALL PROVIDE AN EMERGENCY PHONE NUMBER 24 HOURS/DAY, 7 DAYS/WEEK TO THE POLICE, FIRE DEPARTMENT AND PROJECT MANAGER.
4. CONTRACTOR SHALL POST ON THE SITE, EMERGENCY TELEPHONE NUMBERS FOR PUBLIC WORKS, AMBULANCE, POLICE, AND FIRE DEPARTMENTS.
5. THE CONTRACTOR AGREES TO ASSUME SOLE AND COMPLETE RESPONSIBILITY FOR JOB SITE CONDITIONS DURING THE COURSE OF CONSTRUCTION OF THIS PROJECT, INCLUDING SAFETY OF ALL PERSONS AND PROPERTY, THAT THIS REQUIREMENT SHALL APPLY CONTINUOUSLY AND NOT BE LIMITED TO NORMAL WORKING HOURS, AND THAT THE CONTRACTOR SHALL DEFEND, INDEMNIFY AND HOLD THE OWNER AND THE ENGINEER HARMLESS FROM ANY AND ALL LIABILITY, REAL OR ALLEGED, IN CONNECTION WITH THE PERFORMANCE OF WORK ON THIS PROJECT, EXCEPTING FOR LIABILITY ARISING FROM THE SOLE NEGLIGENCE OF THE OWNER OR THE ENGINEER.
6. CONTRACTOR SHALL NOTIFY ALL PUBLIC OR PRIVATE UTILITY OWNERS 48 HOURS PRIOR TO COMMENCEMENT OF WORK ADJACENT TO THE UTILITY UNLESS AN EXCAVATION PERMIT SPECIFIES OTHERWISE.
7. UTILITIES AND UNDERGROUND FACILITIES INDICATED ARE FOR INFORMATION ONLY. IT IS THE CONTRACTOR'S RESPONSIBILITY TO VERIFY THE LOCATION AND DEPTH WITH THE APPROPRIATE AGENCIES. NEITHER THE OWNER NOR THE CITY NOR THE ENGINEER ASSUMES RESPONSIBILITY THAT THE UTILITIES AND UNDERGROUND FACILITIES INDICATED WILL BE THE UTILITIES AND UNDERGROUND FACILITIES ENCOUNTERED.
8. CONTRACTOR SHALL CONTACT UNDERGROUND SERVICE ALERT U.S.A. 800-227-2600 FORTY-EIGHT (48) HOURS PRIOR TO BEGINNING WORK TO HAVE THE LOCATION OF EXISTING UNDERGROUND UTILITIES MARKED. IT SHALL BE THE RESPONSIBILITY OF THE CONTRACTOR TO IDENTIFY, LOCATE, AND PROTECT ALL UNDERGROUND FACILITIES.
9. THE CONTRACTOR OR OWNER SHALL HIRE A STREET CLEANING CONTRACTOR TO CLEAN UP DIRT AND DEBRIS FROM CITY STREETS THAT ARE ATTRIBUTABLE TO THE DEVELOPMENT'S CONSTRUCTION ACTIVITIES. THE STREET CLEANING CONTRACTOR IS TO HAVE THE CAPABILITY OF WASHING THE STREETS FROM A TANKER TRUCK WITH A HIGH-PRESSURE NOZZLE WITH RECLAIMED WATER, WHERE FEASIBLE, AND/OR SWEEPING THE STREETS WITH BOTH A BROOM-TYPE SWEEPER AND A REGENERATIVE AIR VACUUM SWEEPER, AS DIRECTED BY THE PUBLIC WORKS DIRECTOR, OR HIS DESIGNATED REPRESENTATIVE.
10. ALL GRADING SHALL BE PERFORMED IN SUCH A MANNER AS TO COMPLY WITH THE STANDARDS ESTABLISHED BY THE AIR QUALITY MAINTENANCE DISTRICT FOR AIRBORNE PARTICULATES (DUST).
11. ALL KNOWN WELL LOCATIONS ON THE SITE HAVE BEEN INCLUDED AND SUCH WELLS SHALL BE ABANDONED ACCORDING TO CURRENT REGULATIONS ADMINISTERED BY THE SANTA CLARA VALLEY WATER DISTRICT. ABANDONMENT IS NOT PART OF THIS CONTRACT.
12. THE CIVIL ENGINEER, SANDIS HUMBER JONES, 605 CASTRO STREET, MOUNTAIN VIEW, CA 94041 HAS DESIGNED THIS PROJECT TO COMPLY WITH THE GRADING RECOMMENDATIONS IN THE PROJECT GEOTECHNICAL REPORT PREPARED BY GEOTECHNICAL ENGINEERING INC. (GEI), DATED OCTOBER 20, 1999 WITH SUPPLEMENTS DATED FEBRUARY 10, 2000, FEBRUARY 18, 2000, AND FEBRUARY 25, 2000.
13. ALL GRADING SHALL CONFORM TO APPROVED SPECIFICATIONS PRESENTED HEREON OR ATTACHED HERETO. ALL GRADING WORK SHALL BE OBSERVED AND APPROVED BY THE SOILS ENGINEER. THE SOILS ENGINEER, GEOTECHNICAL ENGINEERING INC. (GEI), SHALL BE NOTIFIED AT LEAST 48 HOURS BEFORE BEGINNING ANY GRADING. UNOBSERVED AND UNAPPROVED GRADING WORK SHALL BE REMOVED AND REPLACED UNDER OBSERVATION.
14. ALL MATERIALS, REQUIRED FOR THE COMPLETE EXECUTION OF THE PROJECT, SHALL BE FURNISHED AND INSTALLED BY THE CONTRACTOR UNLESS OTHERWISE NOTED.
15. THE CONTRACTOR SHALL PROVIDE ALL LIGHTS, SIGNS, BARRICADES, FLAGMEN OR OTHER DEVICES NECESSARY TO PROVIDE FOR PUBLIC SAFETY AND IN ACCORDANCE WITH FHWA, DURING THE CONSTRUCTION PERIOD.
16. THE CONTRACTOR SHALL BE RESPONSIBLE TO REPAIR OR REPLACE ANY EXISTING IMPROVEMENTS OF UNDERGROUND FACILITIES DAMAGED DURING THE CONSTRUCTION PERIOD.
17. REFER TO STORM WATER POLLUTION PREVENTION PLAN REPORT BY SANDIS HUMBER JONES, DATED MARCH 24, 2000 FOR BEST MANAGEMENT PRACTICES TO IMPLEMENT DURING CONSTRUCTION.

EARTHWORK QUANTITIES

IMPORT =	0	CY
EXPORT =	500	CY
FILL =	500	CY
CUT =	1,000	CY

(IF ZERO, INDICATE 0 CY)

NOTE:
THE EARTHWORK QUANTITIES SHOWN ARE PROVIDED FOR THE PURPOSE OF GRADING PERMIT APPROVAL ONLY. IT SHALL BE THE CONTRACTOR'S RESPONSIBILITY TO CARRY OUT THE CUT/FILL, IMPORT/EXPORT AS NECESSARY TO MEET THE DESIGN GRADES AS SHOWN ON THE PLANS REGARDLESS OF THE ESTIMATED EARTHWORK QUANTITIES AS INDICATED. SIGNIFICANT REVISIONS TO THE QUANTITIES MAY NEED REVIEW BY THE CITY.

UNAUTHORIZED CHANGES AND USES

CAUTION: The engineer preparing these plans will not be responsible for, or liable for, unauthorized changes to or uses of these plans. All changes to the plans must be in writing and must be approved by the preparer of the plans.

ADA NOTES

1. ALL SITE WORK SHALL BE IN CONFORMANCE WITH TITLE 24 OF THE CALIFORNIA ADMINISTRATIVE CODE AND WITH THE AMERICANS WITH DISABILITIES ACT.
2. CURB RAMPS SHALL NOT EXCEED A SLOPE OF 1:12 (8.33 %).
3. ENTRANCE RAMPS TO BUILDINGS SHALL NOT EXCEED A SLOPE OF 1:20 (5 %) UNLESS RAILINGS ARE SHOWN ON ARCHITECTURAL PLANS, IN WHICH CASE THE SLOPE SHALL NOT EXCEED 1:12 (8.33 %).
4. A 2% MAXIMUM SLOPE LANDING SHALL BE PROVIDED AT PRIMARY ENTRANCES TO BUILDINGS, THE LANDINGS SHALL HAVE A MINIMUM DEPTH OF 60" WHEN THE DOOR OPENS INTO THE BUILDING, AND 42" PLUS THE WIDTH OF THE DOOR WHEN THE DOOR OPENS ONTO THE LANDING.
5. RAMPS ARE DEFINED AS ANY WALKWAY BETWEEN SLOPES OF 1:20 (5 %) AND 1:12 (8.33 %), AND SHALL HAVE A MINIMUM CROSS SLOPE OF 2% RAMPS EXCEEDING 2'-6" VERTICAL SHALL HAVE INTERMEDIATE (2 % MAXIMUM SLOPE) LANDINGS HAVING A MINIMUM LENGTH IN THE DIRECTION OF TRAVEL OF 60". BOTTOM LANDINGS AT CHANGES IN RAMP DIRECTION SHALL HAVE A MINIMUM LENGTH OF 72". ALL RAMPS SHALL HAVE HANDRAILS (SEE ARCHITECTURAL PLANS).
6. MAXIMUM CROSS SLOPE ON ANY SIDEWALK OR RAMP SHALL BE 2 % MAXIMUM SLOPE WITHIN PARKING STALLS DESIGNATED AS HANDICAPPED PARKING SHALL BE 2 % IN ANY DIRECTION.

STANDARD GRADING NOTES

ALL GRADING SHALL CONFORM TO CITY OF MILPITAS MUNICIPAL CODE.

NOTIFY THE CITY OF MILPITAS PUBLIC WORKS DEPARTMENT AT LEAST 48 HOURS PRIOR TO ANY GRADING.

ALL FILLS SHALL BE CONSTRUCTED IN LIFTS (6"-8") AND COMPACTED TO A MINIMUM 90 % RELATIVE COMPACTION, UNLESS OTHERWISE DIRECTED BY THE SOILS ENGINEER. SLOPES TO RECEIVE FILLS SHALL BE STRIPPED AND BENCHED PRIOR OF RECEIVING FILLS.

ALL CUT AND FILL SLOPES SHALL BE PLANTED, WATERED AND MAINTAINED UNTIL EFFECTIVE EROSION CONTROL HAS BEEN ESTABLISHED TO THE SATISFACTION OF THE SENIOR INSPECTOR.

CONTACT THE CITY OF MILPITAS PUBLIC WORKS DEPARTMENT PRIOR TO OCTOBER 1 TO ARRANGE FOR INSPECTION OF EROSION CONTROL MEASURES.

THE CONTRACTOR SHALL ALWAYS KEEP DIRT AND DEBRIS ON THE SITE AT ALL TIMES. PARTICULARLY DURING THE RAINY SEASON (OCTOBER 1 TO APRIL 15), THE CONTRACTOR SHALL ENSURE THAT ANY EROSION THAT OCCURS DOES NOT LEAVE THE SITE OR ENTER ANY WATERCOURSE, INCLUDING ON-SITE STORM DRAINAGE SYSTEMS. THIS REQUIREMENT SHALL BE IN EFFECT ON A 24 HOUR PER DAY, 7 DAY PER WEEK BASIS AND SHALL NOT BE LIMITED IN ANY WAY TO THE HOURS OF WORK OF THE PROJECT. IF, AT THE DISCRETION OF THE CITY OF MILPITAS PUBLIC WORKS DEPARTMENT, ADDITIONAL EROSION CONTROL MEASURES ARE DEEMED TO BE REQUIRED, THE CONTRACTOR SHALL AT HER/HIS SOLE EXPENSE TAKE SUCH MEASURES AS DIRECTED.

THE CIVIL ENGINEER, SANDIS HUMBER JONES, 605 CASTRO STREET, MOUNTAIN VIEW, CA 94041 HAS DESIGNED THIS PROJECT TO COMPLY WITH THE GRADING RECOMMENDATIONS IN THE PROJECT GEOTECHNICAL INVESTIGATION PREPARED BY GEOTECHNICAL ENGINEERING, INC (GEI).

UNDERGROUND UTILITY NOTE

THE TYPES, LOCATIONS, SIZES AND/OR DEPTHS OF EXISTING UNDERGROUND UTILITIES AS SHOWN ON THIS TOPOGRAPHIC SURVEY ARE APPROXIMATE AND WERE OBTAINED FROM SOURCES OF VARYING RELIABILITY. ONLY ACTUAL EXCAVATION WILL REVEAL THE TYPES, EXTENT, SIZES, LOCATIONS AND DEPTHS OF SUCH UNDERGROUND UTILITIES. A REASONABLE EFFORT HAS BEEN MADE TO LOCATE AND DELINEATE ALL KNOWN UNDERGROUND UTILITIES. HOWEVER, THE ENGINEER CAN ASSUME NO RESPONSIBILITY FOR THE COMPLETENESS OR ACCURACY OF ITS DELINEATION OF SUCH UNDERGROUND UTILITIES WHICH MAY BE ENCOUNTERED, BUT WHICH ARE NOT SHOWN ON THIS SURVEY.

FIRE SYSTEM NOTES

THE CONTRACTOR SHALL DESIGN, PREPARE SHOP DRAWINGS FOR OBTAIN ALL REQUIRED APPROVALS AND CONSTRUCT FIRE SYSTEM REQUIRED FOR THE PROPOSED PROJECT. CONTRACTOR SHALL HAVE SHOP DRAWINGS STAMPED BY A FIRE PROTECTION ENGINEER AS REQUIRED BY THE CITY OF MILPITAS.

CONTRACTOR RESPONSIBILITY

CONTRACTOR AGREES THAT HE SHALL ASSUME SOLE AND COMPLETE RESPONSIBILITY FOR JOB SITE CONDITIONS, INCLUDING THE SAFETY OF ALL PERSONS AND PROPERTY, DURING THE COURSE OF CONSTRUCTION OF THIS PROJECT, AND THAT THIS REQUIREMENT SHALL APPLY CONTINUOUSLY AND NOT BE LIMITED TO NORMAL WORKING HOURS. THE CONTRACTOR SHALL DEFEND, INDEMNIFY AND HOLD THE OWNER AND THE ENGINEER HARMLESS FROM ANY AND ALL LIABILITY, REAL OR ALLEGED, IN CONNECTION WITH THE PERFORMANCE OF WORK ON THIS PROJECT, EXCEPTING FOR LIABILITY ARISING FROM THE SOLE NEGLIGENCE OF THE OWNER OR THE ENGINEER.

DISCREPANCIES

IF THERE ARE ANY DISCREPANCIES BETWEEN DIMENSIONS IN DRAWINGS AND EXISTING CONDITIONS WHICH WILL AFFECT THE WORK, THE CONTRACTOR SHALL BRING SUCH DISCREPANCIES TO THE ATTENTION OF THE ENGINEER FOR ADJUSTMENT BEFORE PROCEEDING WITH THE WORK. THE CONTRACTOR SHALL BE RESPONSIBLE FOR THE PROPER FITTING OF ALL WORK AND FOR THE COORDINATION OF ALL TRADES, SUBCONTRACTORS, AND PERSONS ENGAGED UPON THIS CONTRACT.

DEMOLITION NOTES:

1. DEMOLITION AND REMOVAL OF EXISTING TRANSFORMERS AND EXISTING CHILLERS SHALL BE COORDINATED WITH THE MEP CONSULTANT.
2. DEMOLITION OF EXISTING GAS, ELECTRIC AND COMMUNICATION/DATA LINES SHALL BE COORDINATED WITH THE MEP CONSULTANT.
3. DEMOLITION OF EXISTING TREES NOS. 1 & 9 SHALL BE COORDINATED WITH THE LANDSCAPE ARCHITECT.
4. DEMOLITION OF EXISTING TREES AND LANDSCAPE FEATURES SHALL BE COORDINATED WITH THE LANDSCAPE ARCHITECT.
5. DEMOLITION OF EXISTING POND SHALL BE COORDINATED WITH THE ARCHITECT AND POND CONSULTANT.

EXCAVATION NOTES:

1. CONTRACTOR SHALL POTHOLE AND VERIFY SIZE, DEPTH AND LOCATION OF ALL EXISTING UNDERGROUND UTILITIES WITHIN THE LIMITS OF THE EXCAVATION PRIOR TO THE START OF DEMOLITION.
2. CONTRACTOR SHALL PROVIDE TEMPORARY UTILITY SERVICES AS NECESSARY TO MAINTAIN OPERATION OF LIBRARY AND COMMUNITY CENTER.
3. CONTRACTOR SHALL SUBMIT A PLAN FOR OFF-HAUL OF EXCAVATION SPOILS TO ENGINEER AND CITY OF MILPITAS FOR APPROVAL PRIOR TO THE START OF EARTHWORK OPERATIONS.
4. CONTRACTOR SHALL SUBMIT TRAFFIC CONTROL PLANS AS NECESSARY TO MINIMIZE DISRUPTION TO TRAFFIC FLOW ON MILPITAS BLVD. AND CALAVERAS BLVD.
5. CONTRACTOR SHALL SUBMIT SHORING PLANS AS NECESSARY TO MAINTAIN INTEGRITY OF SIDEWALKS, TREES, UTILITIES AND ROADWAYS.

SHEET INDEX

C0.0	COVER SHEET
C1.0	NOTES, LEGEND & ABBREVIATIONS
C2.1	DEMOLITION PLAN
C2.2	DEMOLITION PLAN
C3.0	HORIZONTAL CONTROL PLAN
C3.1	HORIZONTAL CONTROL PLAN
C3.2	HORIZONTAL CONTROL PLAN
C4.1	GRADING & DRAINAGE PLAN
C4.2	GRADING & DRAINAGE PLAN
C5.1	WATER, STORM & SANITARY SEWER PLAN
C5.2	WATER, STORM & SANITARY SEWER PLAN
C6.1	CONSTRUCTION DETAILS
C6.2	CONSTRUCTION DETAILS
C7.1	EROSION CONTROL NOTES & DETAILS
L1.1	LAYOUT PLAN - SOUTH AREA
L1.2	LAYOUT PLAN - NORTH AREA
L3.1	IRRIGATION PLAN - SOUTH AREA
L3.2	IRRIGATION PLAN - NORTH AREA
L3.3	IRRIGATION NOTES AND LEGEND
L3.4	IRRIGATION DETAILS
L4.1	PLANTING PLAN - SOUTH AREA
L4.2	PLANTING PLAN - NORTH AREA
L5.0	CONSTRUCTION DETAILS

SOILS REPORT

PROJECT SHALL BE CONSTRUCTED IN CONFORMANCE WITH THE GEOTECHNICAL INVESTIGATION FOR THE SITE PREPARED BY GEOTECHNICAL ENGINEERING INC. (GEI), DATED OCTOBER 20, 1999 WITH SUPPLEMENTS DATED FEBRUARY 10, 2000, FEBRUARY 18, 2000 AND FEBRUARY 25, 2000.

FLOOD PLAIN NOTE

THE SITE CURRENTLY FALLS WITHIN ZONE B BASED ON THE FIRM MAP PANEL NUMBER 060344-0001-F AND 060344-0003-F, DATED JULY 4, 1988. THE SITE IS SUBJECT TO AREAS BETWEEN LIMITS OF 100-YEAR FLOOD AND 500-YEAR FLOOD, OR CERTAIN AREAS SUBJECT TO 100-YEAR FLOODING WITH AVERAGE DEPTHS LESS THAN ONE FOOT OR WHERE THE CONTRIBUTING DRAINAGE AREA IS LESS THAN ONE SQUARE MILE, OR AREAS PROTECTED BY LEVEES FROM THE BASE FLOOD.

BENCHMARK:

THE BASIS OF ELEVATIONS IS CITY OF MILPITAS BENCH MARK CAL-MIL, A BRASS DISK IN MONUMENT WELL AT THE INTERSECTION OF CALAVERAS BOULEVARD AND MILPITAS BOULEVARD.
(ELEVATION = 19.239 FEET, CITY OF MILPITAS DATUM)

BASIS OF BEARINGS:

THE BEARING OF NORTH 30°31'18" WEST ON THE MONUMENT LINE OF NORTH MILPITAS BOULEVARD, AS SHOWN ON THAT CERTAIN PARCEL MAP FILED IN BOOK 576 OF MAPS AT PAGES 3-7, SANTA CLARA COUNTY RECORDS, IS THE BASIS OF BEARINGS FOR THIS SURVEY.

SITE PRECONSTRUCTION NOTICE

NOTIFY THE SENIOR BUILDING INSPECTOR 48 HOURS IN ADVANCE OF STARTING THE WORK FOR THIS PROJECT. PLEASE CALL AT (408) 586-3251

PERMIT NOTE:

1. A PUBLIC WORKS ENCROACHMENT PERMIT IS REQUIRED FOR WORK WITHIN THE MILPITAS CITY RIGHT OF WAY OR EASEMENT.
2. A CALIFORNIA DEPARTMENT OF TRANSPORTATION (CALTRANS) ENCROACHMENT PERMIT IS REQUIRED FOR WORK WITHIN THE CALTRANS RIGHT OF WAY.
3. A CITY OF MILPITAS TREE REMOVAL PERMIT IS REQUIRED PRIOR TO ANY TREE REMOVAL.

milpitas civic center
parking, circulation & streetscape renovation

8143, 4140, & 4194

STUDIOS architecture
999 GREEN ST. SAN FRANCISCO, CA 94111 415.398.7272

Associate Architect
Michael Willis Architects

Landscape Architect
SWA Group

Engineers
Sandis Humber Jones

ISSUE FOR:	DATE:
100% construction documents	6.6.01

N

Notes, Legend & Abbreviations

C1.0

PROJECT NO. 99240.00
SHJ PROJECT NO. 299203

File:X:\P\299203\CD\OFF-SITE\C1.0.dwg Date: JUN 04, 2001 Time:1:59PM

MATCHLINE SEE SHEET C2.2

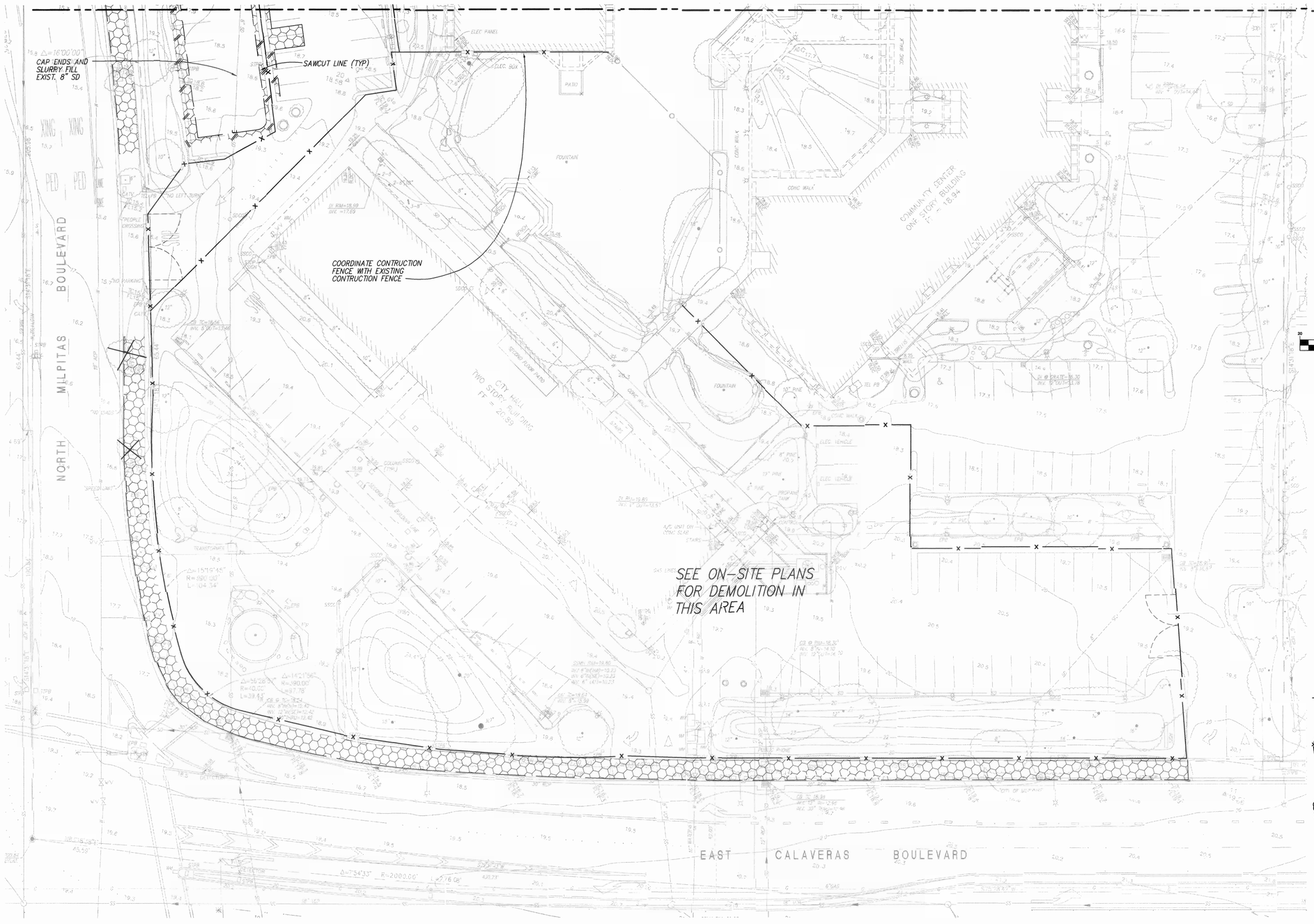

GRAPHIC SCALE

20 0 10 20 40

(IN FEET)
1 inch = 20 ft.

LEGEND:

- EXIST. CURB/UTILITIES INCLUDING BASE MATERIAL TO BE REMOVED
- EXIST. CMU/MASONARY WALL INCLUDING FOOTING TO BE REMOVED
- EXIST. AC/CONC INCLUDING BASE MATERIAL TO BE REMOVED
- EXIST. LANDSCAPE FEATURE OR APPURTENANT STRUCTURES TO BE REMOVED
- EXIST. TREE TO BE REMOVED
- EXIST. TREE TO BE RELOCATED. SEE SPECIFICATIONS FOR THE TREE PROTECTION AND TRANSPLANTING.
- 6'-HIGH CONSTRUCTION FENCE
- EXIST. TREE TO REMAIN PROTECT IN PLACE
- #3 APPROXIMATE NEW LOCATION OF RELOCATED TREE

DEMOLITION NOTES

1. EXISTING CITY HALL BUILDING FOUNDATION AND APPURTENANCES SHALL BE DEMOLISHED AND REMOVED BY OTHERS PER ON-SITE PLANS.
2. ALL TREES TO REMAIN WITHIN THE LIMITS OF CONSTRUCTION SHALL RECEIVE TREE PROTECTION AS SHOWN ON SHEET C6.1 AND AS STATED IN SPECIFICATION SECTION.
3. REMOVAL OF EXIST. IRRIGATION LINES, UTILITY BOXES, WHEEL STOPS AND SIGNAGE SHALL BE CONSIDERED INCIDENTAL TO DEMOLITION.
4. CONTRACTOR SHALL PROVIDE 48 HOUR NOTICE TO LANDSCAPE ARCHITECT PRIOR TO RELOCATING TREES #1 AND #9. NEW LOCATIONS OF TREES SHALL BE SET IN FIELD BY LANDSCAPE ARCHITECT.
5. ROUGH GRADING OF LANDSCAPE MOUNDS TO BE COMPLETED PRIOR TO NOTIFYING LANDSCAPE ARCHITECT.
6. ALL SERVICES (WATER, SANITARY, STORM, GAS, ELECTRIC, PHONE, CATV, ETC.) TO THE EXISTING BUILDING MUST BE CAPPED/TURNED OFF PROPERLY.
7. POTABLE/RECYCLED WATER TO BE LOCKED OFF AT THE CURB STOP. TEMPORARY HOSE BIB TO BE USED IMMIDIATELY BEHIND THE POTABLE WATER METER IF WATER IS NEEDED. IINE TO THE BUILDING TO BE DISCONNECTED.
8. CAP SANITARY SEWERS AT THE CLEANOUT. IF THERE IS NO CLEANOUT, CAP BEHIND THE STREET WHERE CLEANOUT IS TYPICALLY INSTALLED.
9. IF WATER IS NEEDED FOR DUST CONTROL, USE EXISTING WATER METER OR POTABLE/RECYCLED CONSTRUCTION WATER METER AS APPROPRIATE.
10. CAP STORM DRAIN AT INLETS.
11. ABANDONMENTS OF ALL CITY SERVICES SHALL BE CAPPED AT THE CORPORATION STOPS OF WATER MAINS, TYPICALLY LOCATED IN THE PUBLIC STREET.
12. A PUBLIC WORKS ENCHROACHMENT PERMIT IS REQUIRED FOR WORK WITHIN CITY RIGHT OF WAY OR EASEMENT.
13. A CALIFORNIA DEPARTMENT OF TRANSPORTATION (CALTRANS) ENCROACHMENT PERMIT IS REQUIRED FOR WORK WITHIN THE CALTRANS RIGHT OF WAY.

Demolition Plan

File:X:\P\299203\CD\OFF-SITE\C2.1.dwg Date: JUN 04, 2001 Time:2:01PM

milpitas civic center
parking, circulation & streetscape renovation

8143, 4140, & 4194

STUDIOS architecture
919 GREEN ST. SAN FRANCISCO, CA 94111 415.398.7575

Associate Architect
Michael Willis Architects

Landscape Architect
SWA Group

Engineers
Sandis Humber Jones

ISSUE FOR:	DATE:

100% construction documents 6.5.01

N

Demolition Plan

C2.1

PROJECT NO. 299203
SHJ PROJECT NO.

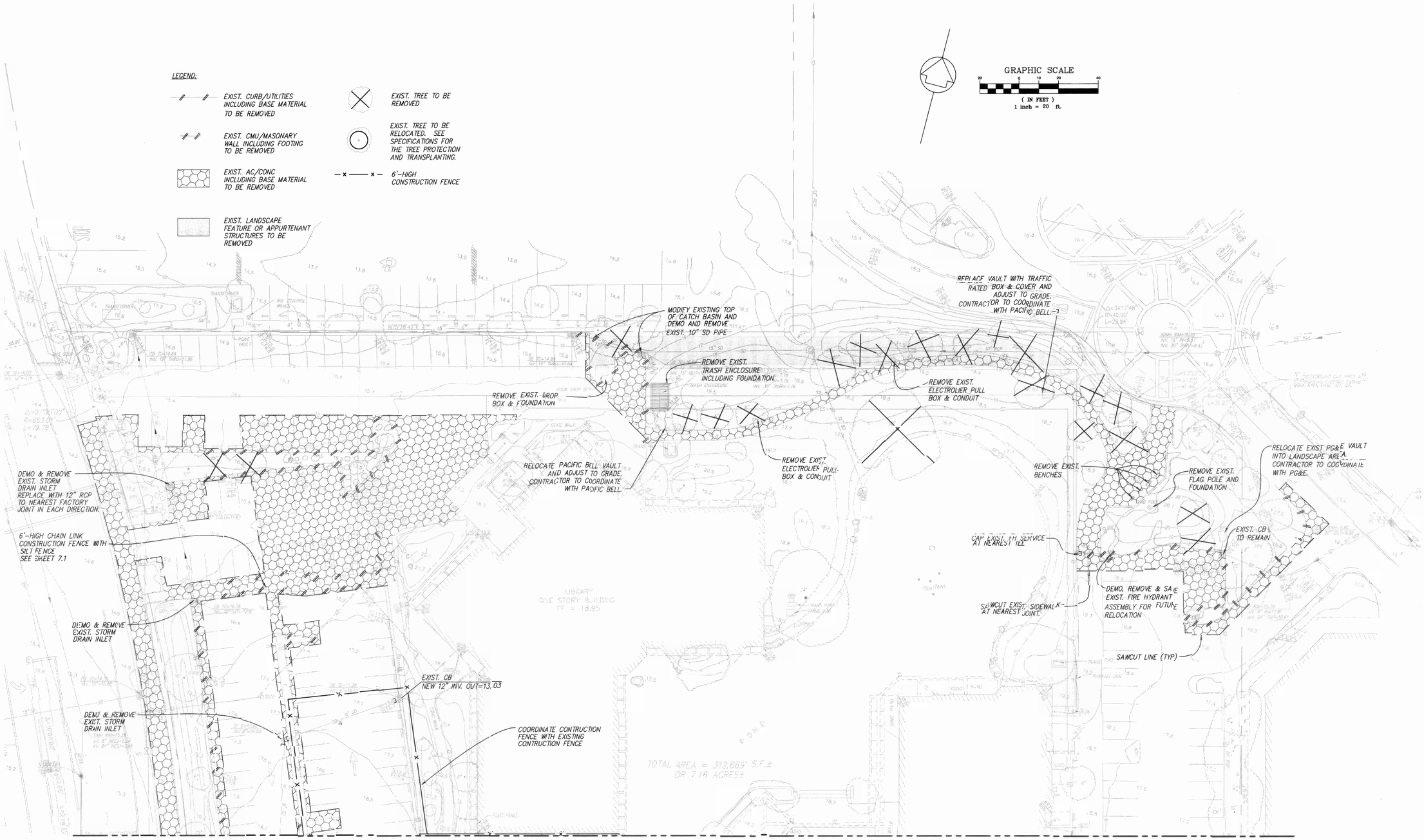

MATCHLINE SEE SHEET C2.1

DEMOLITION NOTES

1. EXISTING CITY HALL BUILDING FOUNDATION AND APPURTENANCES SHALL BE DEMOLISHED AND REMOVED BY OTHERS PER ON-SITE PLANS.
2. ALL TREES TO REMAIN WITHIN THE LIMITS OF CONSTRUCTION SHALL RECEIVE TREE PROTECTION AS SHOWN ON SHEET C6.1 AND AS STATED IN SPECIFICATION SECTION.
3. REMOVAL OF EXIST. IRRIGATION LINES, UTILITY BOXES, WHEEL STOPS AND SIGNAGE SHALL BE CONSIDERED INCIDENTAL TO DEMOLITION.
4. CONTRACTOR SHALL PROVIDE 48 HOUR NOTICE TO LANDSCAPE ARCHITECT PRIOR TO RELOCATING TREES #1 AND #9. NEW LOCATIONS OF TREES SHALL BE SET IN FIELD BY LANDSCAPE ARCHITECT.
5. ROUGH GRADING OF LANDSCAPE MOUNDS TO BE COMPLETED PRIOR TO NOTIFYING LANDSCAPE ARCHITECT.
6. ALL SERVICES (WATER, SANITARY, STORM, GAS, ELECTRIC, PHONE, CATV, ETC.) TO THE EXISTING BUILDING MUST BE CAPPED/TURNED OFF PROPERLY.
7. POTABLE/RECYCLED WATER TO BE LOCKED OFF AT THE CURB STOP. TEMPORARY HOSE BIB TO BE USED IMMIDIATELY BEHIND THE POTABLE WATER METER IF WATER IS NEEDED. IINE TO THE BUILDING TO BE DISCONNECTED.
8. CAP SANITARY SEWERS AT THE CLEANOUT. IF THERE IS NO CLEANOUT, CAP BEHIND THE STREET WHERE CLEANOUT IS TYPICALLY INSTALLED.
9. IF WATER IS NEEDED FOR DUST CONTROL, USE EXISTING WATER METER OR POTABLE/RECYCLED CONSTRUCTION WATER METER AS APPROPRIATE.
10. CAP STORM DRAIN AT INLETS.
11. ABANDONMENTS OF ALL CITY SERVICES SHALL BE CAPPED AT THE CORPORATION STOPS OF WATER MAINS, TYPICALLY LOCATED IN THE PUBLIC STREET.
12. A PUBLIC WORKS ENCHROACHMENT PERMIT IS REQUIRED FOR WORK WITHIN CITY RIGHT OF WAY OR EASEMENT.
13. A CALIFORNIA DEPARTMENT OF TRANSPORTATION (CALTRANS) ENCROACHMENT PERMIT IS REQUIRED FOR WORK WITHIN THE CALTRANS RIGHT OF WAY.

Demolition Plan

z:\03\CD\OFF-SITE\C2.2.dwg Date: JUN 04, 2001 Time:12:08PM

milpitas civic center
parking, circulation & streetscape renovation

8143, 4140, & 4194

STUDIOS architecture
919 GREEN ST. SAN FRANCISCO, CA. 94111 415.398.7575

Associate Architect
Michael Willis Architects

Landscape Architect
SWA Group

Engineers
Sandis Humber Jones

ISSUE FOR:	DATE:
100% construction documents	6.5.01

N

Demolition Plan

C2.2

PROJECT NO. 299203

LINE TABLE

LINE	LENGTH	BEARING
L4	29.15'	N75°34'31"E
L5	36.82'	N21°59'04"W
L6	178.00'	N21°59'04"W
L7	190.76'	S21°59'04"E
L10	66.66'	S21°59'04"E
L11	0.84'	N30°33'00"E
L12	14.12'	N67°58'16"E
L13	160.03'	N21°59'04"W
L14	35.01'	S67°55'23"W
L15	10.94'	N81°08'48"W
L16	28.13'	N36°59'27"E
L23	42.81'	N66°53'41"E
L24	40.04'	S66°36'08"W
L25	10.94'	N21°59'04"W
L26	14.00'	N67°55'23"E
L34	13.99'	S67°46'22"W
L35	4.00'	N67°58'26"E
L36	15.95'	S67°58'26"W
L37	3.93'	S21°59'04"E
L52	14.75'	N25°30'16"E
L68	14.00'	S21°59'04"E
L69	11.08'	S63°57'49"E
L70	24.47'	S72°36'55"W
L71	11.08'	N14°28'22"W
L72	27.00'	S75°31'38"W
L73	14.00'	S14°28'22"E
L74	0.97'	S75°31'38"W
L76	2.02'	S75°31'38"W
L77	10.47'	S21°58'56"E
L78	14.01'	N67°46'22"E
L79	40.00'	N75°31'38"E
L80	4.91'	N21°59'04"W
L81	14.00'	S67°58'22"W
L82	10.66'	S59°28'22"E
L83	10.75'	N75°30'12"E
L84	7.92'	N75°04'37"E
L85	10.66'	N30°31'38"E
L86	187.15'	S75°36'19"W
L87	125.13'	S75°36'19"W
L88	7.96'	S75°36'19"W
L89	13.00'	S14°23'41"E
L90	9.24'	N14°23'41"W
L91	14.00'	N14°30'00"W
L92	56.98'	S14°35'22"E
L93	7.49'	S35°51'33"W
L94	14.67'	N15°57'49"W
L95	1.01'	N75°02'18"E
L96	13.86'	N14°38'17"W
L97	16.39'	N11°43'09"E
L98	7.44'	N69°06'59"E
L99	17.50'	N75°28'48"E
L100	27.26'	S14°31'12"E
L101	14.04'	S08°44'07"W
L102	14.02'	N22°59'36"E
L103	38.98'	S29°21'00"W
L104	0.25'	S14°27'52"E
L105	9.00'	N14°40'47"W
L106	11.50'	N75°28'48"E
L107	13.51'	S14°46'23"E
L108	5.77'	S75°54'49"W
L122	23.63'	N45°37'04"E
L123	10.33'	N59°27'00"W
L124	12.50'	N46°47'46"E
L125	12.50'	N46°47'46"E

CURVE TABLE

CURVE	RADIUS	DELTA	LENGTH
C1	201.04'	22°11'29"	77.87'
C2	223.04'	26°38'01"	103.68'
C3	149.09'	16°55'32"	44.04'
C4	21.75'	38°14'09"	14.51'
C5	62.96'	88°25'40"	97.17'
C6	78.00'	57°47'06"	78.67'
C7	60.00'	34°44'19"	36.38'
C8	10.00'	88°52'45"	15.51'
C9	10.00'	91°24'48"	15.95'
C10	2.00'	89°54'28"	3.14'
C11	5.00'	89°54'28"	7.85'
C12	10.00'	90°02'30"	15.72'
C13	3.00'	89°57'30"	4.71'
C14	2.00'	89°58'32"	3.14'
C15	8.00'	90°13'32"	12.60'
C16	3.00'	137°31'50"	7.20'
C17	2.00'	86°14'39"	3.01'
C18	24.00'	40°36'47"	17.01'
C19	5.00'	92°54'44"	8.11'
C20	2.00'	90°00'00"	3.14'
C21	2.00'	82°29'18"	2.88'
C22	2.00'	89°45'26"	3.13'
C23	10.00'	97°30'42"	17.02'
C24	10.00'	82°29'18"	14.40'
C25	2.00'	90°02'33"	3.14'
C26	10.00'	97°29'17"	17.01'
C27	5.09'	44°07'11"	3.92'
C28	5.00'	45°00'00"	3.93'
C29	6.53'	179°48'13"	20.49'
C30	10.00'	90°00'00"	15.71'
C31	3.00'	90°00'00"	4.71'
C32	2.00'	90°04'31"	3.14'
C33	10.00'	32°24'37"	5.66'
C34	75.00'	46°16'52"	60.58'
C35	36.50'	23°10'00"	14.76'
C36	30.00'	14°29'00"	7.58'
C37	10.00'	68°45'07"	12.00'
C38	172.50'	06°38'57"	20.02'
C39	10.00'	39°09'16"	6.83'
C40	113.27'	15°32'42"	30.73'
C41	3.00'	88°59'53"	4.66'
C42	2.50'	156°51'34"	6.84'
C43	25.00'	83°45'17"	36.54'
C44	20.00'	26°21'26"	9.20'
C45	2.50'	156°51'34"	6.84'
C46	180.00'	10°49'21"	34.00'
C47	140.00'	30°55'00"	75.54'
C48	9.81'	38°15'58"	6.55'
C49	2.75'	83°09'50"	3.99'
C50	19.20'	16°26'16"	5.51'
C51	164.00'	12°43'05"	36.40'
C52	2.00'	89°18'35"	3.12'
C53	30.00'	18°11'00"	9.52'
C54	2.00'	89°09'02"	3.11'
C55	61.16'	42°09'47"	45.01'
C56	4.50'	89°37'18"	7.04'
C57	4.50'	89°56'40"	7.06'
C58	12.03'	40°18'44"	8.46'
C59	14.11'	91°06'00"	22.43'
C60	15.00'	60°15'58"	15.78'
C61	34.00'	23°10'00"	13.75'
C62	1.25'	180°00'00"	3.93'
C63	1.00'	90°00'00"	1.57'
C64	1.50'	180°00'00"	4.71'
C65	1.50'	180°00'00"	4.71'

COORDINATE LISTING

POINT	NORTHING	EASTING	DESCRIPTION
1	5256.9351	4858.6745	BEGIN CURB
2	5264.2467	4882.0274	ER
3	5259.4751	4883.5214	5' RP
4	5260.7247	4888.3627	ER
5	5249.9934	4891.1325	ANGLE PT.
6	5256.7412	4917.2757	ANGLE PT.
7	5270.2969	4913.7769	ER
8	5270.7968	4915.7134	2'RP
9	5272.7333	4915.2136	ER
10	5272.9767	4916.1565	ER
11	5271.0401	4916.6563	2' RP
12	5271.7889	4918.5109	ER
13	5237.6453	4932.2950	ER
14	5233.9018	4923.0222	10' RP
15	5224.7039	4926.9464	ER
16	5207.9060	4887.5744	END CURB
17	5190.3171	4897.1868	ANGLE PT.
18	5206.2168	4933.9329	ER
19	5197.0391	4937.9040	10' RP
20	5200.7827	4947.1769	ER
21	5190.6346	4951.2737	ER
22	5189.8859	4949.4192	2' RP
23	5188.0326	4950.1709	ER
24	5182.7695	4937.1943	ANGLE PT.
25	5034.3731	4997.1036	ANGLE PT.
26	5047.5309	5029.5450	ER
27	5052.1643	5027.6657	5' RP
28	5054.0361	5032.3021	ER
29	5057.6849	5030.8291	ER
30	5058.8080	5033.6109	3' RP
31	5061.5890	5032.4858	ER
32	5067.5701	5047.2703	ER
33	5064.7891	5048.3953	3' RP
34	5063.4973	5051.1030	ER
35	5050.1879	5044.7535	ER
36	5081.8010	4973.4470	78' RP
37	5004.6191	4984.7141	ER
38	5006.3032	4973.9018	BEGIN CURB
39	4953.2382	4988.8222	BEGIN CURB
40	4975.7073	5005.7483	ER
41	4940.4564	5054.3011	60' RP
42	4997.0912	5034.4894	PRC
43	5056.3096	5013.1164	62.96' PT
44	5076.0496	5072.8990	ER
45	5076.6767	5074.7981	2' RP
46	5078.5307	5074.0480	ER
47	5083.8268	5087.1371	END CURB
68	5094.2189	5022.5504	ANGLE PT.
69	5099.5117	5035.5023	ER
70	5097.6603	5036.2588	2' RP
71	5098.4177	5038.1099	ER
72	5095.3883	5030.7056	8' RP
73	5087.9722	5033.7059	ER
74	5086.4726	5029.9991	ER
75	5095.7427	5026.2489	10' RP
76	5091.9992	5016.9760	ER
77	5268.8891	4945.5636	ER
78	5272.6326	4954.8364	10' RP
79	5282.3153	4952.3372	ER
80	5282.8194	4954.2905	ER
81	5273.1368	4956.7897	10' RP
82	5276.8803	4966.0626	ER
83	5267.1749	4969.9803	ER
84	5266.4262	4968.1258	2' RP
85	5264.5748	4968.8823	ER
86	5259.2758	4955.9151	ANGLE PT.
127	5314.1740	5075.4917	END CURB
128	5312.1349	5067.8408	ER
129	5307.2936	5069.0904	5' RP
130	5309.8334	5064.7834	ER
131	5300.6537	5059.3703	ANGLE PT.
132	5290.6569	5020.6396	ANGLE PT.
133	5296.0701	5011.4599	ER
134	5291.6618	5008.9059	5.09' RP
135	5296.6044	5007.6706	ER
136	5293.9123	4997.2581	ER
137	5284.2306	4999.7613	10' RP
138	5280.4871	4990.4885	ER
139	5275.9337	4992.3267	ER
140	5276.6824	4994.1813	2' RP
141	5274.8284	4994.9314	ER
142	5280.0785	5007.9081	ANGLE PT.
143	5218.2629	5032.8638	END CURB
144	5169.5806	5052.5174	BEGIN CURB
145	5156.5985	5057.7584	END CURB
146	5354.7877	5103.6324	BEGIN CURB
147	5356.4211	5109.9549	6.53' RP
148	5358.0329	5116.2829	ER
149	5366.9853	5114.0088	ANGLE PT.
150	5413.5118	5295.2865	ER
151	5266.0234	5317.0722	149.09' RP
152	5413.4656	5339.1684	ER
153	5399.5931	5337.0368	ER
154	5399.2893	5339.0136	2' RP
155	5397.3163	5338.6861	ER

COORDINATE LISTING

POINT	NORTHING	EASTING	DESCRIPTION
156	5235.5305	5311.8280	164' RP
157	5387.4342	5373.6446	ER
158	5389.2866	5374.3985	2' RP
159	5388.5054	5376.2396	ER
160	5401.4094	5381.7152	ANGLE PT.
161	5235.5305	5311.8280	180' RP
162	5385.3364	5411.6188	PCC
163	5332.7335	5380.4210	61.16' RP
164	5350.7833	5438.8554	ER
165	5337.7125	5442.2763	ANGLE PT.
166	5329.0063	5444.5570	ANGLE PT.
167	5326.1220	5433.4201	ER
168	5321.7657	5434.5483	4.5' RP
169	5320.6417	5430.1910	ER
170	5320.3990	5430.2536	ER
171	5321.5230	5434.6109	4.5' RP
172	5317.1584	5435.7061	ER
173	5318.5628	5441.3030	ER
174	5329.7398	5436.8561	12.03' RP
175	5324.0939	5447.4780	ER
176	5358.0724	5466.5847	ER
177	5364.7741	5454.1729	14.11' RP
178	5377.3123	5460.6351	ER
179	5306.3583	5385.6609	BEGIN CURB
180	5332.7434	5378.8274	ER
181	5326.6512	5360.6174	19.20' RP
182	5337.6474	5376.3592	ER
183	5342.0350	5393.3003	ER
184	5344.6019	5392.3187	12.75' RP
185	5345.2710	5394.9842	PCC
186	5342.9144	5385.4572	9.81' RP
187	5350.6649	5391.4778	PCC
188	5235.5305	5311.8280	140' RP
189	5375.2294	5321.0057	ER
190	5345.2939	5319.0391	30' RP
191	5374.3482	5311.5659	ER
192	5367.0858	5283.3308	ER
193	5365.1488	5283.8290	2' PT.
194	5364.6480	5281.8927	ER
195	5351.0940	5285.3981	ANGLE PT.
196	5319.9872	5164.1992	ANGLE PT.
197	5332.5791	5160.9673	ER
198	5331.8333	5158.0615	3' RP
199	5334.7391	5157.3157	ER
200	5332.7598	5149.6040	ER
201	5323.0738	5152.0900	10' RP
202	5320.5878	5142.4040	ER
216	4970.2215	5340.0043	ER
217	4976.5394	5364.1928	25' RP
218	4999.8971	5355.2811	ER
219	5002.5494	5362.2328	END CURB
220	4976.6789	5371.4218	ER
221	4976.3072	5373.8940	2.5' RP
222	4976.9369	5376.3134	ER
223	4921.7908	5390.6669	ER
224	4921.1611	5388.2475	2.5' RP
225	4919.6313	5386.2702	ER
226	4965.5268	5445.5880	75' RP
243	4881.9040	5380.3390	PCC
244	4876.0461	5388.4436	10' RP
245	4885.7070	5385.8619	ER
246	4885.9680	5386.8383	ER
247	4883.0697	5387.6128	3' RP
248	4883.8948	5390.4971	ER
250	4700.8368	5010.6054	MONUMENT
251	5083.6150	4906.6230	MONUMENT
252	5479.0209	4673.4994	MONUMENT
253	4931.5992	5031.5876	COL. "A" & "6"
254	5033.2248	5091.5562	COL. "A" & "1"
255	4917.6111	5287.4806	COL. "1" & "K"
256	4815.9854	5227.5120	COL. "6" & "K"
258	4869.7879	5394.5325	END CURB
259	4859.9219	5359.0050	PCC
260	4817.5804	5265.3866	PCC
261	4820.4042	5251.4224	ER
262	4825.6525	5242.5305	ER
263	4825.2996	5241.1610	ER
264	4824.5779	5240.7350	END CURB
265	4849.1115	5249.5696	END CURB
266	4844.2485	5259.5241	ER
267	4842.6770	5276.1079	PCC
268	4877.1760	5345.3530	PCC
269	4888.2651	5354.9385	PCC
270	4889.4870	5352.7574	PCC
271	4879.1573	5343.8284	END CURB
272	4870.2830	5356.7772	ER
273	4878.8404	5365.8887	ER
274	4881.0272	5363.8349	ER
275	4872.4697	5354.7234	ER
276	4956.8161	5343.5057	ER
277	4942.3032	5339.4823	ER
278	4925.7791	5322.5920	END CURB
279	4953.0254	5328.9926	15' RP
280	4906.1037	5323.0946	34' RP
281	4906.1037	5323.0946	36.5' RP
282	4888.8761	5353.8480	1.25' RP
283	5036.5098	5222.7541	201.04' RP
284	4865.8708	5269.9394	24' RP
285	4824.7913	5242.0222	1' RP
286	4839.1350	5262.4777	21.75' RP
287	5036.5098	5222.7541	223.04' RP
288	4949.0739	5289.1366	113.27' RP
289	4879.9338	5364.8618	1.5' RP
290	4871.3764	5355.7503	1.5' RP

LEGEND:

L4, C3, 1 — MILPITAS CIVIC CENTER IMPROVEMENTS. FOR USE WITH THIS SET OF PLANS.

L11, C1, 26 — MILPITAS CITY HALL IMPROVEMENTS. FOR USE WITH ON-SITE IMPROVEMENT PLANS.

BENCHMARK:

THE BASIS OF ELEVATIONS IS CITY OF MILPITAS BENCH MARK CAL-MIL, A BRASS DISK IN MONUMENT WELL AT THE INTERSECTION OF CALAVERAS BOULEVARD AND MILPITAS BOULEVARD. (ELEVATION = 19.239 FEET, CITY OF MILPITAS DATUM)

BASIS OF BEARINGS:

THE BEARING OF NORTH 30°31'18" WEST ON THE MONUMENT LINE OF NORTH MILPITAS BOULEVARD, AS SHOWN ON THAT CERTAIN PARCEL MAP FILED IN BOOK 576 OF MAPS AT PAGES 3-7, SANTA CLARA COUNTY RECORDS, IS THE BASIS OF BEARINGS FOR THIS SURVEY.

Horizontal Control Plan

milpitas civic center parking, circulation & streetscape renovation

8143, 4140, & 4194

STUDIOS architecture

99 GREEN ST. SAN FRANCISCO, CA. 94111 415.398.7575

Associate Architect
Michael Willis Architects

Landscape Architect
SWA Group

Engineers
Sandis Humber Jones

ISSUE FOR: DATE:

100% construction documents 6.5.01

N

Horizontal Control Plan

C3.0

PROJECT NO. 299203

Milpitas City Hall 99540 00 A20

File: X:\P\299203\CD\OFF-SITE\C3.0.dwg Date: JUN 04, 2001 Time: 2:08PM

MATCHLINE SEE SHEET C3.2

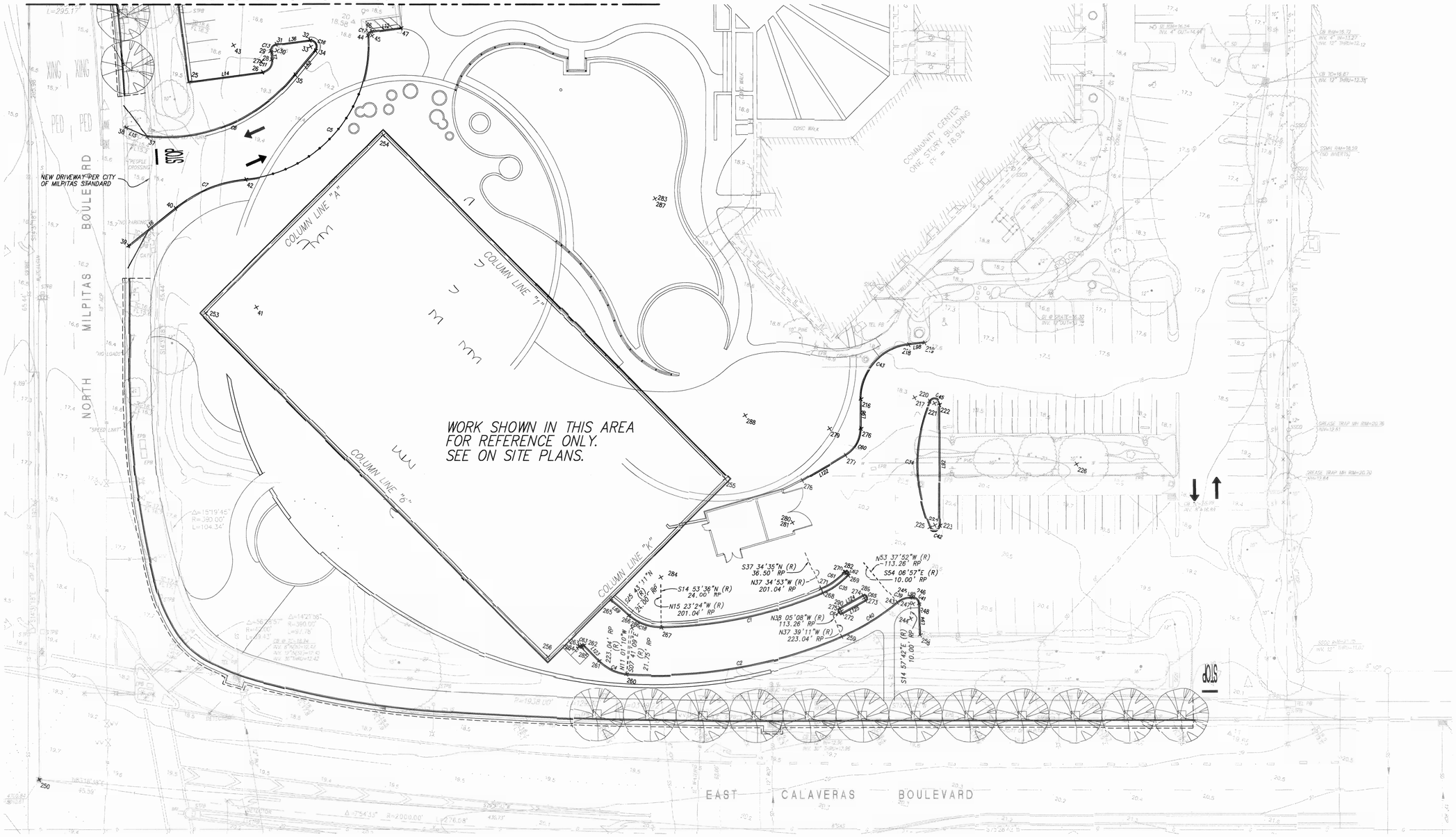

GRAPHIC SCALE

20 0 10 20 40

(IN FEET)
1 inch = 20 ft.

BENCHMARK:

THE BASIS OF ELEVATIONS IS CITY OF MILPITAS BENCH MARK CAL-MIL, A BRASS DISK IN MONUMENT WELL AT THE INTERSECTION OF CALAVERAS BOULEVARD AND MILPITAS BOULEVARD. (ELEVATION = 19.239 FEET, CITY OF MILPITAS DATUM)

BASIS OF BEARINGS:

THE BEARING OF NORTH 30°31'18" WEST ON THE MONUMENT LINE OF NORTH MILPITAS BOULEVARD, AS SHOWN ON THAT CERTAIN PARCEL MAP FILED IN BOOK 576 OF MAPS AT PAGES 3-2, SANTA CLARA COUNTY RECORDS, IS THE BASIS OF BEARINGS FOR THIS SURVEY.

Horizontal Control Plan

File: X:\P\299203\CD\OFF-SITE\C3.1.dwg Date: JUN 04, 2001 Time: 2:12PM

milpitas civic center
parking, circulation & streetscape renovation
8143, 4140, & 4194

STUDIOS architecture
919 GREEN ST. SAN FRANCISCO, CA 94111 415.398.7575

Associate Architect
Michael Willis Architects

Landscape Architect
SWA Group

Engineers
Sandis Humber Jones

ISSUE FOR:	DATE:
100% construction docum ents	6.5.01

N

Horizontal Control Plan

C3.1

PROJECT NO. 99540.00
SHJ PROJECT NO. 299203

Milpitas City Hall 99540.00 9.2001

milpitas civic center

parking, circulation & streetscape renovation

8143, 4140, & 4194

STUDIOS architecture

999 GREEN ST. SAN FRANCISCO, CA. 94111 415.398.7575

Associate Architect
Michael Willis Architects

Landscape Architect
SWA Group

Engineers
Sandis Humber Jones

ISSUE FOR:	DATE:
100% construction documents	6.5.01

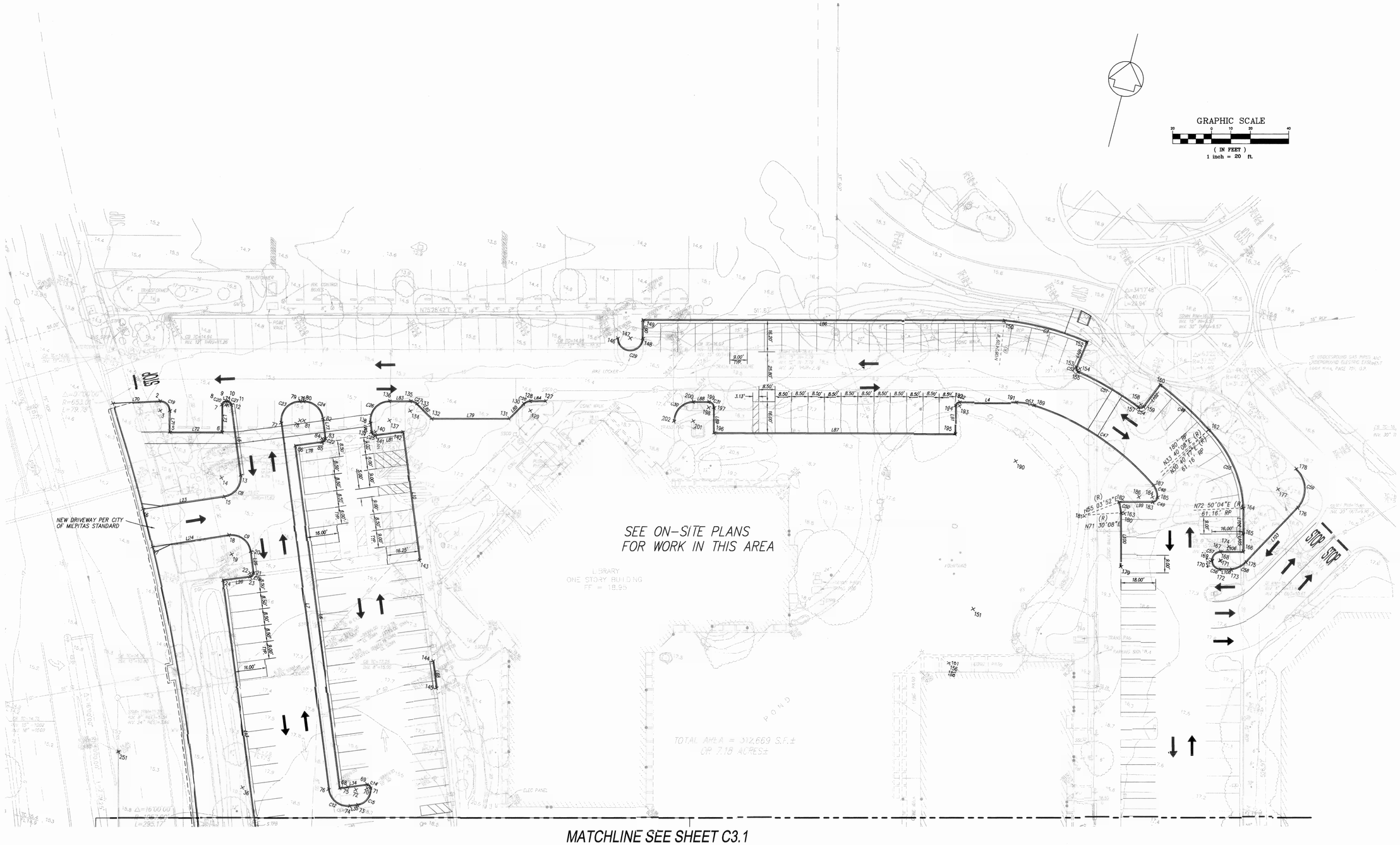

Horizontal Control Plan

N

Horizontal Control Plan

C3.2

PROJECT NO 99540.00
SHJ PROJECT NO. 299203

File:X:\P\299203\CD\SFF-SITE\C3.2.dwg Date: JUN 04, 2001 Time:2:12PM

MILPITAS CIVIC CENTER

MATCHLINE SEE SHEET C4.2

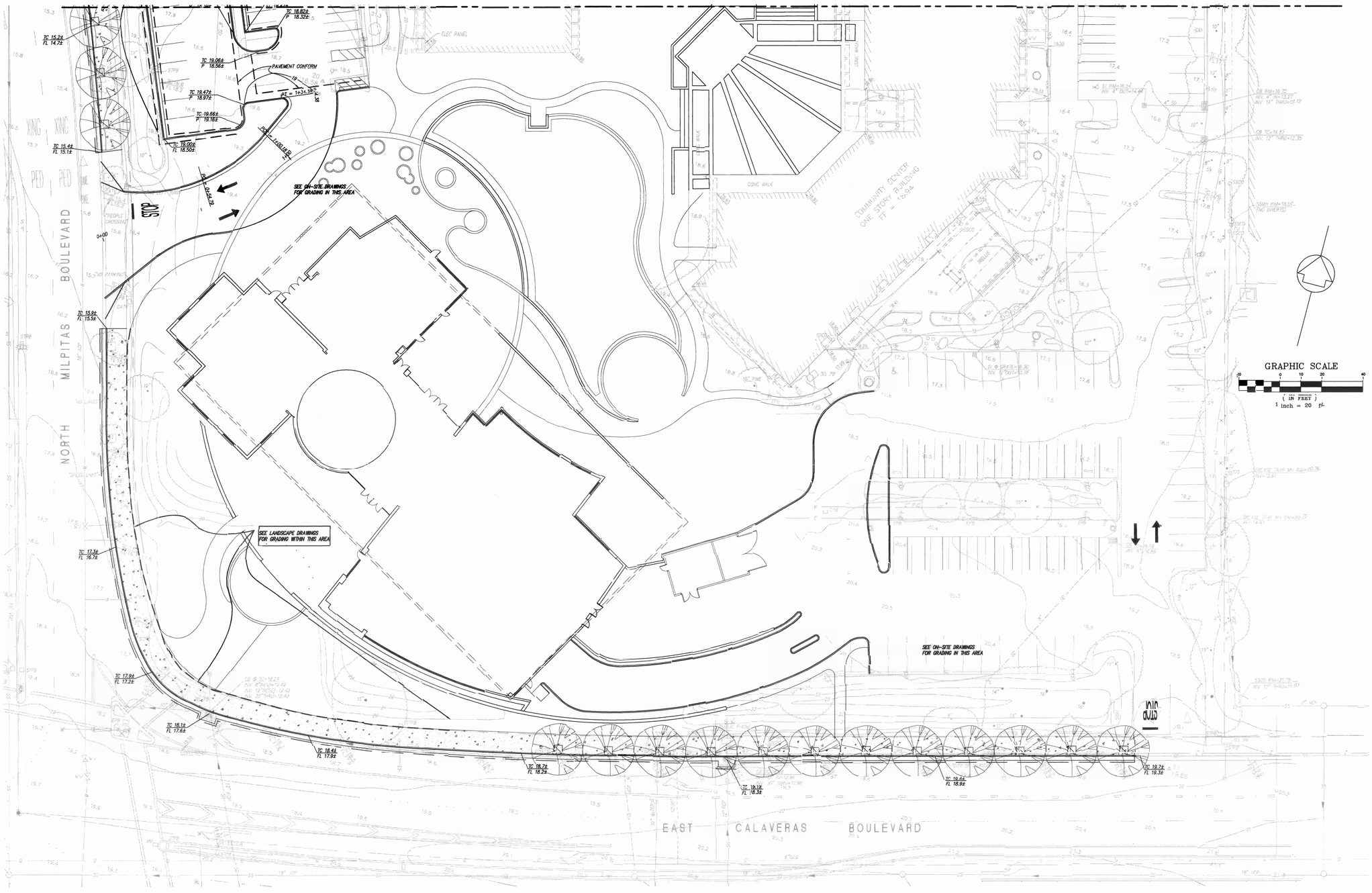

Grading & Drainage Plan

milpitas civic center

parking, circulation & streetscape renovation

8143, 4140, & 4194

STUDIOS architecture
999 GREEN ST. SAN FRANCISCO, CA 94111 415.398.7575

Associate Architect
Michael Willis Architects

Landscape Architect
SWA Group

Engineers
Sandis Humber Jones

ISSUE FOR:	DATE:
100% construction documents	6.5.01

N

Grading & Drainage Plan

C4.1

PROJECT NO. 99540.00
SHJ PROJECT NO. 299203

File:X:\P\299203\CD\OFF-SITE\C4.1.dwg Date: JUN 04, 2001 Time:3:42PM

MILPITAS CIVIC PLAN 99540.00 A02B

milpitas civic center

parking, circulation & streetscape renovation

8143, 4140, & 4194

STUDIOS architecture

919 GREEN ST. SAN FRANCISCO, CA 94111 415.398.7575

Associate Architect
Michael Willis Architects

Landscape Architect
SWA Group

Engineers
Sandis Humber Jones

ISSUE FOR:	DATE:
100% construction documents	6.5.01

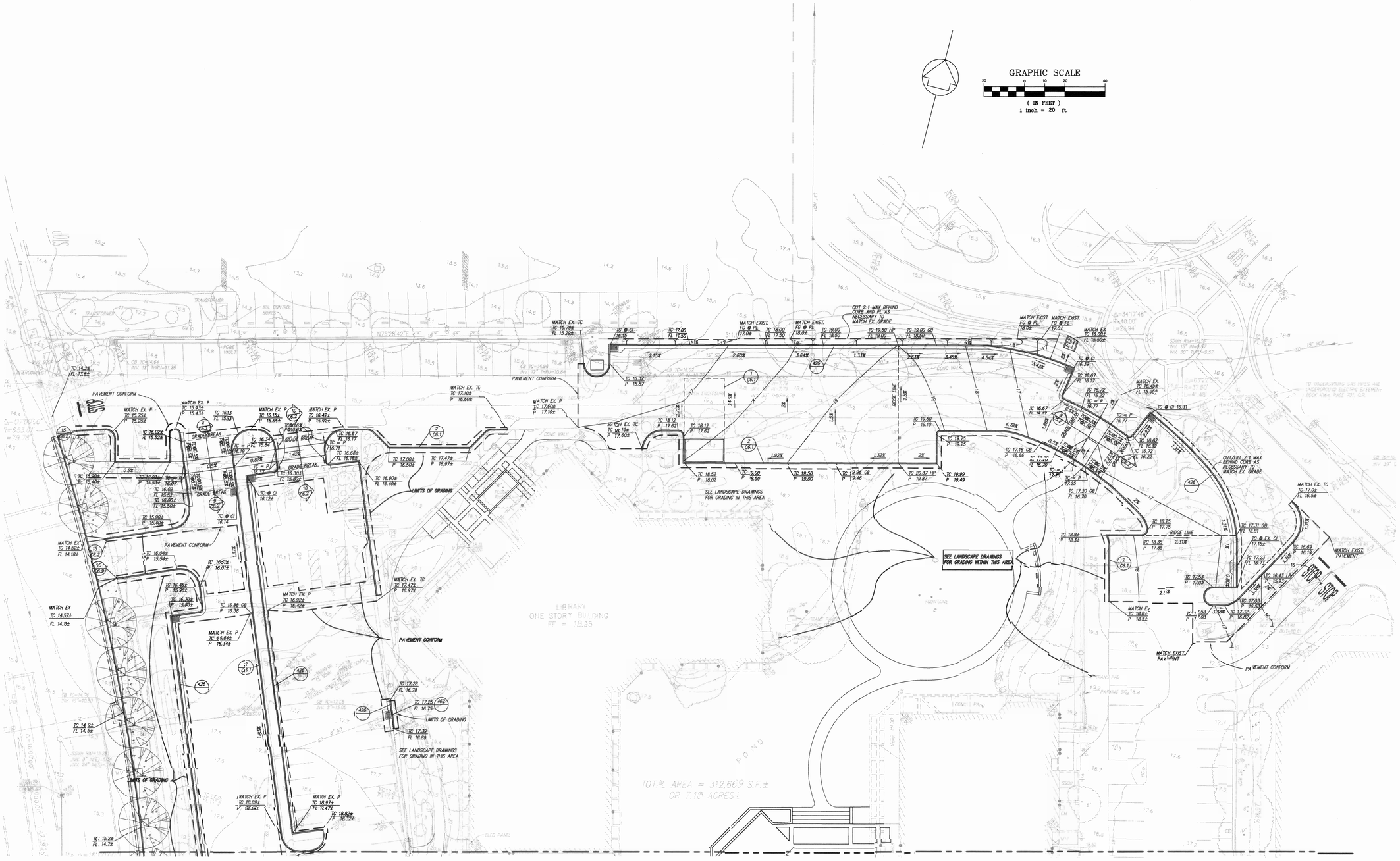

MATCHLINE SEE SHEET C4.1

N

Grading & Drainage Plan

Grading & Drainage Plan

C4.2

PROJECT NO. 99540.00
SHJ PROJECT NO. 299203

File:X:\P\299203\CD\OFF-SITE\C4.2.dwg Date: JUN 04, 2001 Time:4:16PM

MILPITAS CITY HALL 99540.00

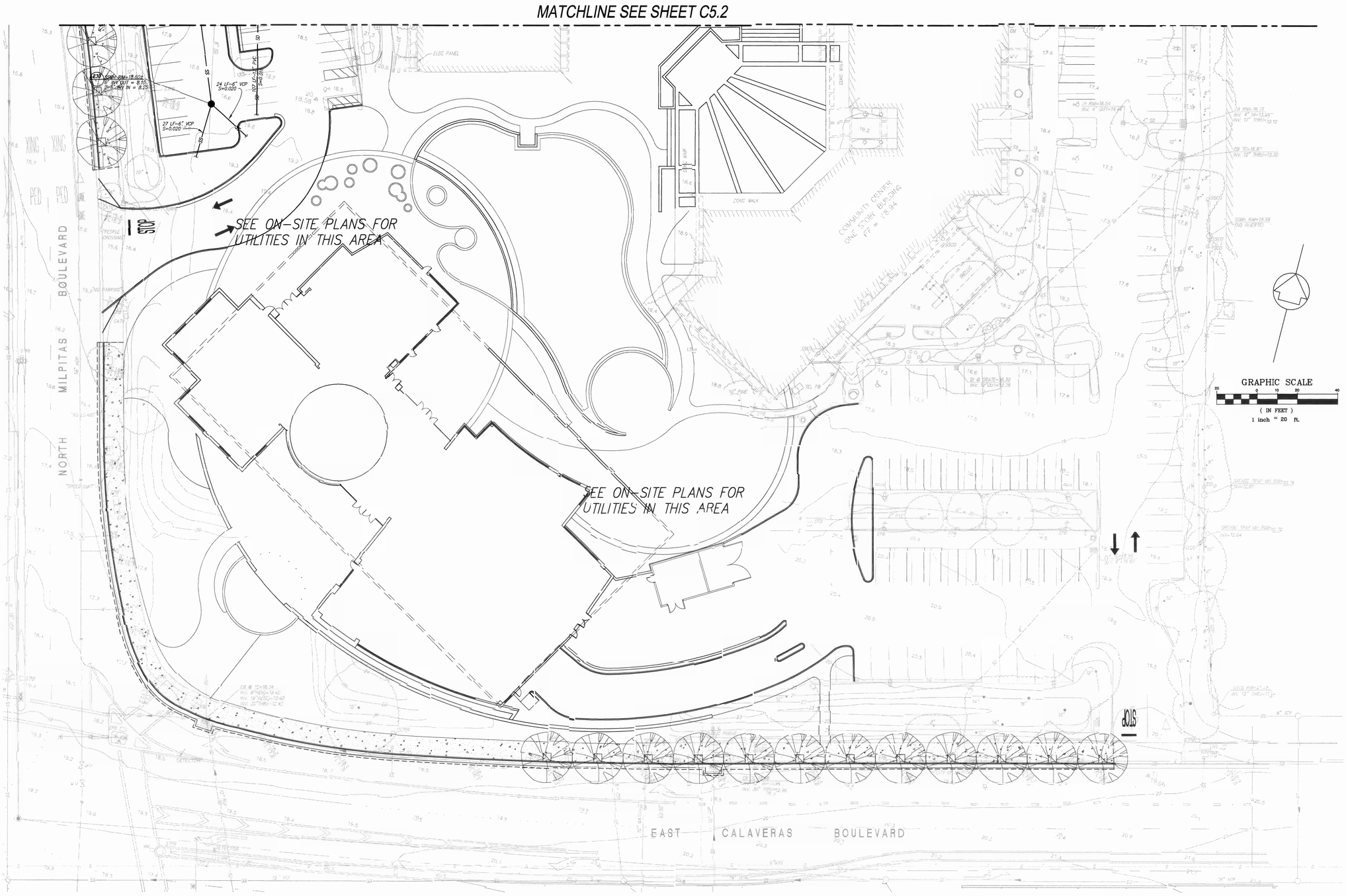

Water, Storm & Sanitary Sewer Plan

File: X:\P\299203\CD\OFF-SITE\C5.1.dwg Date: JUN 04, 2001 Time: 2:18PM

Milpitas City Hall 99540.00 ACP

milpitas civic center

parking, circulation & streetscape renovation

8143, 4140, & 4194

STUDIOS architecture
919 GREEN ST. SAN FRANCISCO, CA 94111 415.398.7575

Associate Architect
Michael Willis Architects

Landscape Architect
SWA Group

Engineers
Sandis Humber Jones

ISSUE FOR:	DATE:
00% construction documents	6.5.01

N

Water, Storm & Sanitary Sewer Plan

C5.1

PROJECT NO. 99540.00
SHJ PROJECT NO. 299203

milpitas civic center

parking, circulation & streetscape renovation

8143, 4140, & 4194

STUDIOS architecture

919 GREEN ST. SAN FRANCISCO, CA 94111 415.398.7575

Associate Architect
Michael Willis Architects

Landscape Architect
SWA Group

Engineers
Sandis Humber Jones

ISSUE FOR:	DATE:
100% construction documents	6.5.01

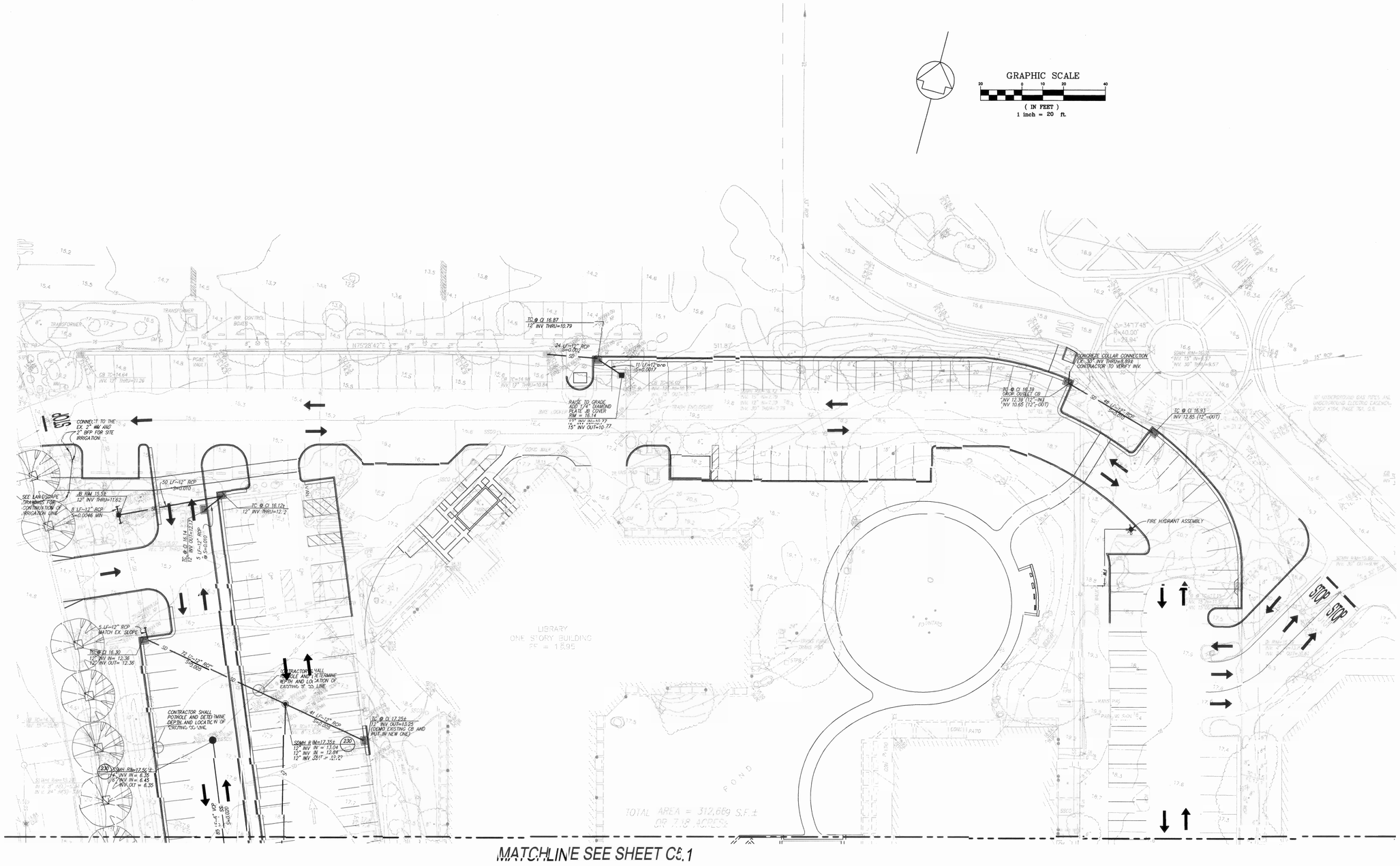

Water, Storm & Sanitary Sewer Plan

N

Water, Storm & Sanitary Sewer Plan

C5.2

PROJECT NO. 995540.00
SHJ PROJECT NO. 299203

File:X:\P\299203\CD\OFF-SITE\C5.2.dwg Date: JUN 04, 2001 Time:2:20PM

MILPITAS CIVIC CENTER

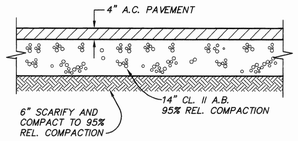

THICKENED AC PAVEMENT
SECTION AT TRASH ENCLOSURE (1)
N.T.S.

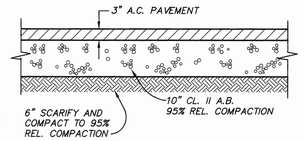

ASPHALT PAVEMENT SECTION (4)
N.T.S.

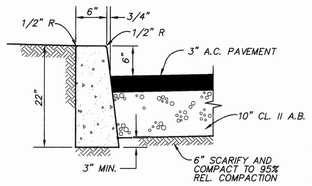

6" VERTICAL CURB (2)
N.T.S.

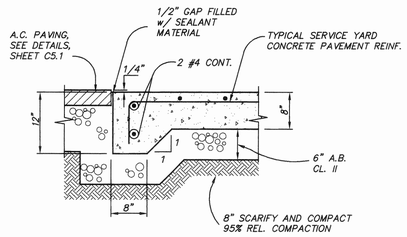

CONCRETE PAVEMENT
@ A.C. INTERFACE (5)
N.T.S.

CONSTRUCTION PERIOD PROTECTION FOR TREE SHOULD BE PROVIDED BEFORE GRADING OR OTHER EQUIPMENT IS ALLOWED ON THE PROPERTY.

WHEN CONSTRUCTION IS TO TAKE PLACE BENEATH A TREE CANOPY ON ONE SIDE, THE FENCE SHOULD BE SITED 2' TO 3' BEYOND THAT CONSTRUCTION, BUT BETWEEN CONSTRUCTION AND THE TREE TRUNK

IF CONSTRUCTION OR PAVING IS TO TAKE PLACE THROUGHOUT THE AREA BENEATH THE CANOPY, AND DRIP LINE FENCING IS NOT PRACTICAL, SNOW FENCING SHOULD BE USED TO PROTECT TRUNKS FROM DAMAGE

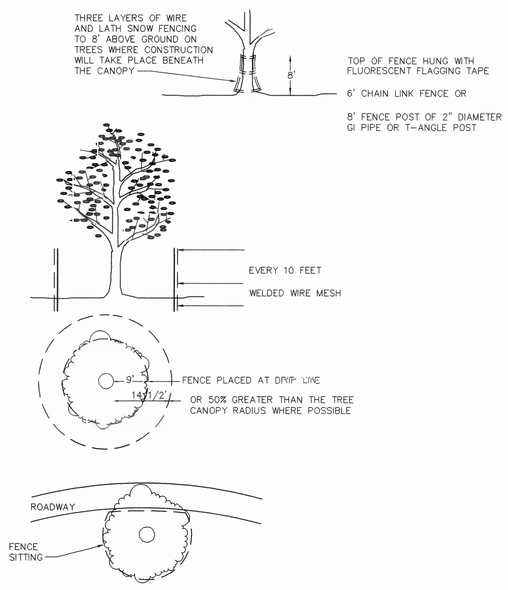

TREE PROTECTION DETAIL (3)
N.T.S.

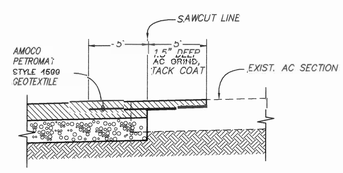

PAVEMENT CONFORM (6)
N.T.S.

Construction Details

File:X:\P\299203\CD\OFF-SITE\C6.1.dwg Date: JUN 04, 2001 Time:2:25PM

Milpitas City Hall 95640.00 A226

milpitas civic center
parking, circulation &
streetscape renovation
8143, 4140, & 4194

STUDIOS
architecture
919 GREEN ST. SAN FRANCISCO, CA 94111 415.398.7575

Associate Architect
Michael Willis Architects

Landscape Architect
SWA Group

Engineers
Sandis Humber Jones

ISSUE FOR:	DATE:
100% construction documents	6.5.01

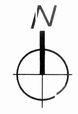

Construction
Details
C6.1

PROJECT NO. 98540.00
SWA PROJECT NO. 299203

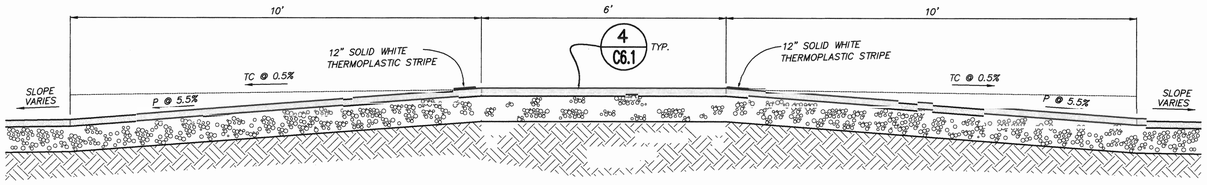

RAISED CROSS WALK DETAIL (9)

N.T.S.

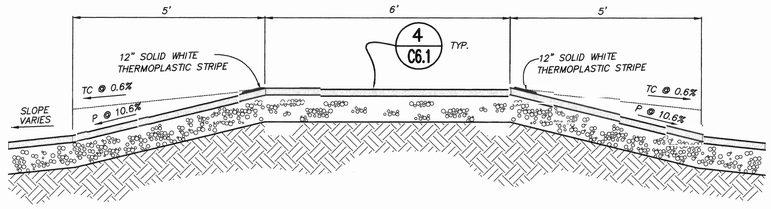

RAISED CROSS WALK DETAIL (10)

N.T.S.

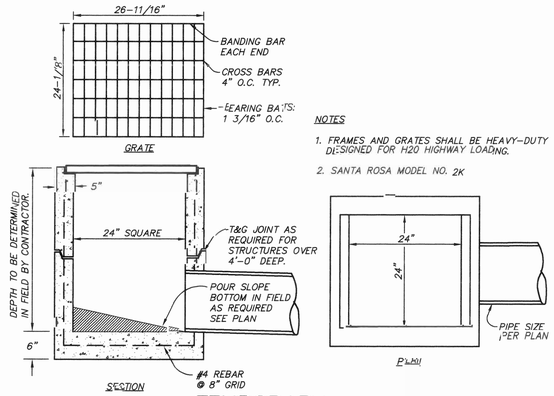

NOTES

1. FRAMES AND GRATES SHALL BE HEAVY-DUTY DESIGNED FOR H20 HIGHWAY LOADING.
2. SANTA ROSA MODEL NO. 2K

TEMPORARY CATCH BASIN DETAIL (12)

N.T.S.

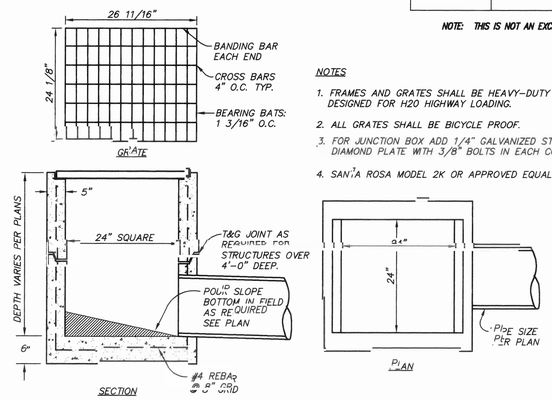

NOTES

1. FRAMES AND GRATES SHALL BE HEAVY-DUTY DESIGNED FOR H20 HIGHWAY LOADING.
2. ALL GRATES SHALL BE BICYCLE PROOF.
3. FOR JUNCTION BOX ADD 1/4" GALVANIZED STEEL DIAMOND PLATE WITH 3/8" BOLTS IN EACH CORNER
4. SANTA ROSA MODEL 2K OR APPROVED EQUAL.

CATCH BASIN/ JUNCTION BOX DETAIL (13)

N.T.S.

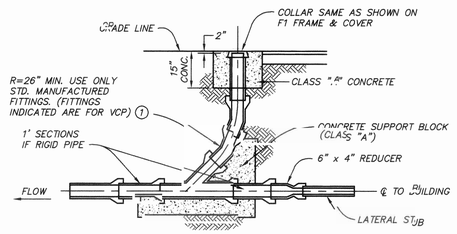

NOTE: (1) FOR P.V.C. PIPE, LARGE 90° MANUFACTURED SWEEPS MAY BE USED IF R=36' OR GREATER.

CLEANOUT w/ LATERAL STUB (14)

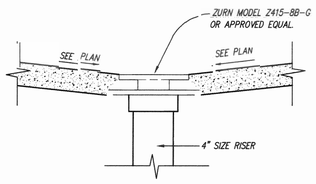

FLOOR DRAIN (19)

N.T.S.

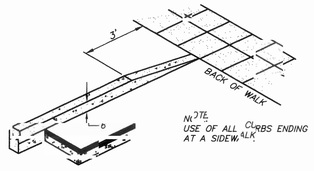

NOTE
USE OF ALL CURBS ENDING AT A SIDEWALK.

TAPERED CURB DETAIL (15)

N.T.S.

CITY OF MILPITAS STANDARD DETAILS:

DETAIL NO.	DETAIL TITLE
220	STREET BREAKOUT
222	TRENCH CONSTRUCTION
223	SANITARY AND STORM MANHOLE
410	CURB AND GUTTER
426	COMMERCIAL SIDEWALK
432	COMMERCIAL INDUSTRIAL DRIVEWAY
462	CURB INLET
464	FLAT GRATE INLET
624	SEWAGE BACKFLOW PROTECTION DEVICE
702	VALVE INSTALLATION
704	THRUST BLOCKS
708	WET TAPS (4" TAPS AND LARGER)
730	DETECTOR CHECK VALVE INSTALLATION FOR ON-SITE FIRE SERVICE
734	RPPA VALVE REDUCED PRESSURE

CALTRANS STANDARD DETAILS:

DETAIL NO.	DESCRIPTION
A87, A1-6	TYPE A, 6" CURB
A87, A2-6	TYPE A, 6" CURB WITH 24" GUTTER
A87	CASE A, DRIVEWAY

NOTE: THIS IS NOT AN EXCLUSIVE LIST AND OTHER DETAILS MAY APPLY AS REQUIRED.

milpitas civic center
parking, circulation & streetscape renovation

8143, 4140, & 4194

STUDIOS architecture
99 GREEN ST. SAN FRANCISCO, CA. 94111 415.398.7575

Associate Architect
Michael Willis Architects

Landscape Architect
SWA Group

Engineers
Sandis Humber Jones

ISSUE FOR:	DATE:
100% construction documents	6.5.01

N

Construction Details

C6.2

PROJECT NO. 99540.00
SHJ PROJECT NO. 299203

Construction Details

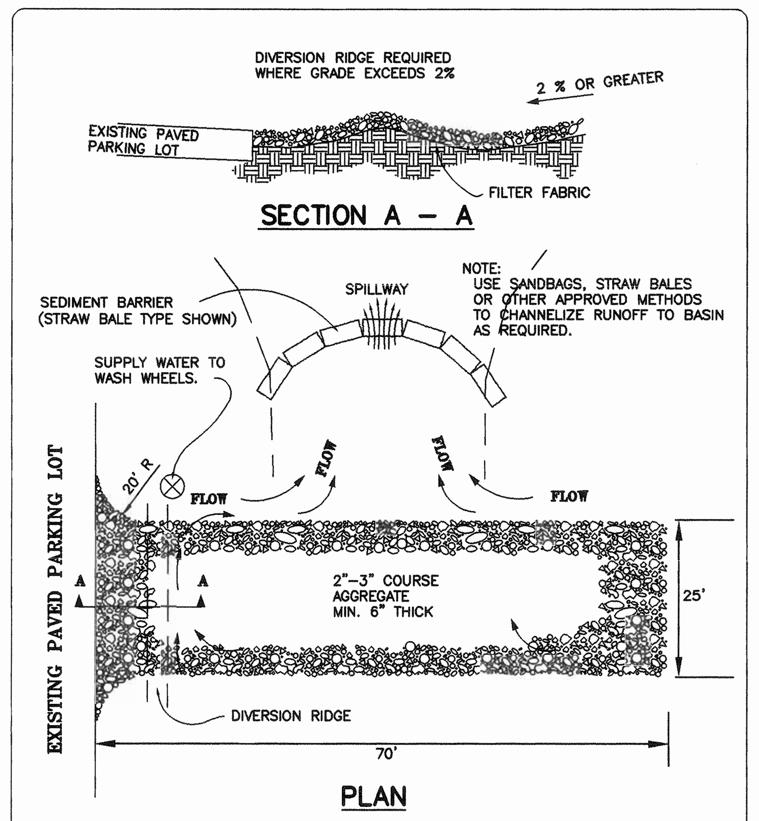

NOTES:

1. THE ENTRANCE SHALL BE MAINTAINED IN A CONDITION THAT WILL PREVENT TRACKING OR FLOWING OF SEDIMENT ONTO PUBLIC RIGHTS-OF-WAY. THIS MAY REQUIRE TOP DRESSING, REPAIR AND/OR CLEANOUT OF ANY MEASURES USED TO TRAP SEDIMENT.
2. WHEELS SHALL BE CLEANED PRIOR TO ENTRANCE ONTO EXISTING PAVED PARKING LOT.
3. WHEN WASHING IS REQUIRED, IT SHALL BE DONE ON AN AREA STABILIZED WITH CRUSHED STONE THAT DRAINS INTO AN APPROVED SEDIMENT TRAP OR SEDIMENT BASIN.

DETAIL 1
TEMPORARY GRAVEL CONSTRUCTION ENTRANCE/EXIT

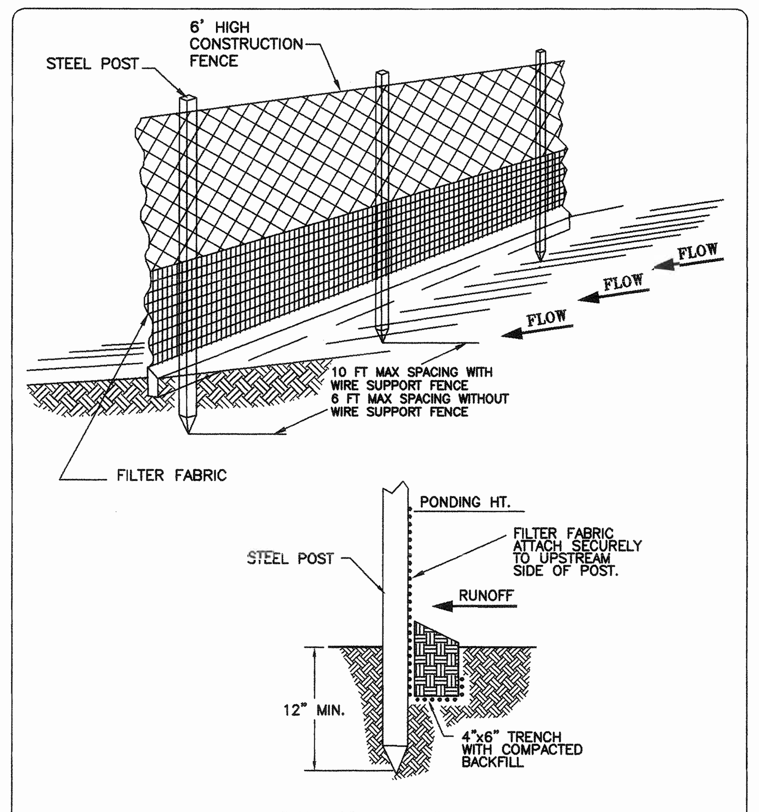

STANDARD DETAIL
TRENCH WITH NATIVE BACKFILL

NOTE:

1. INSPECT AND REPAIR FENCE AFTER EACH STORM EVENT AND REMOVE SEDIMENT WHEN NECESSARY.
2. REMOVED SEDIMENT SHALL BE DEPOSITED TO AN AREA THAT WILL NOT CONTRIBUTE SEDIMENT OFF-SITE AND CAN BE PERMANENTLY STABILIZED.
3. SILT FENCE SHALL BE PLACED ON SLOPE CONTOURS TO MAXIMIZE PONDING EFFICIENCY.

DETAIL 2
CONSTRUCTION FENCE WITH SILT FENCE

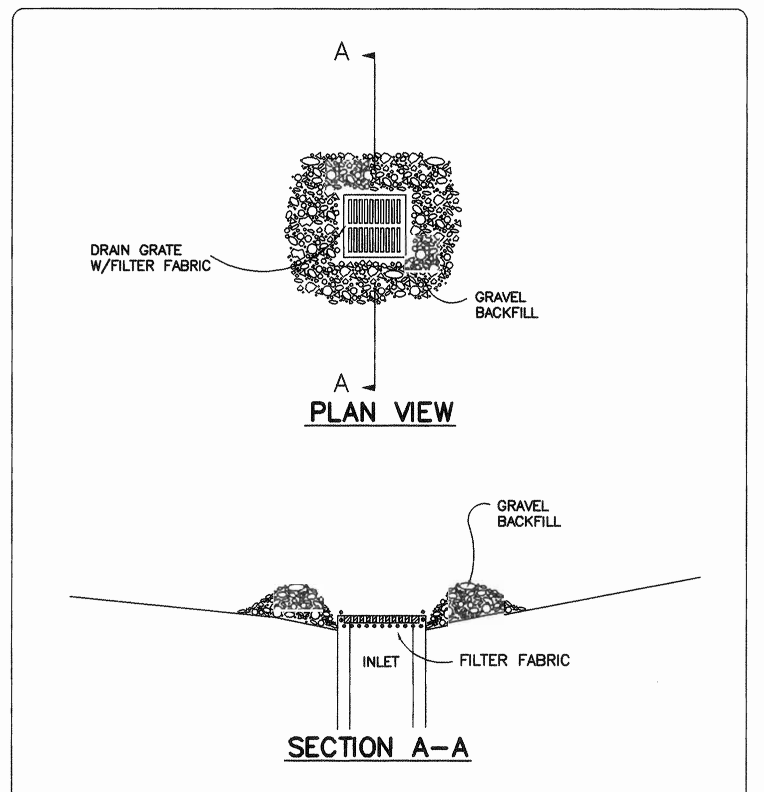

DETAIL 3
INLET PROTECTION

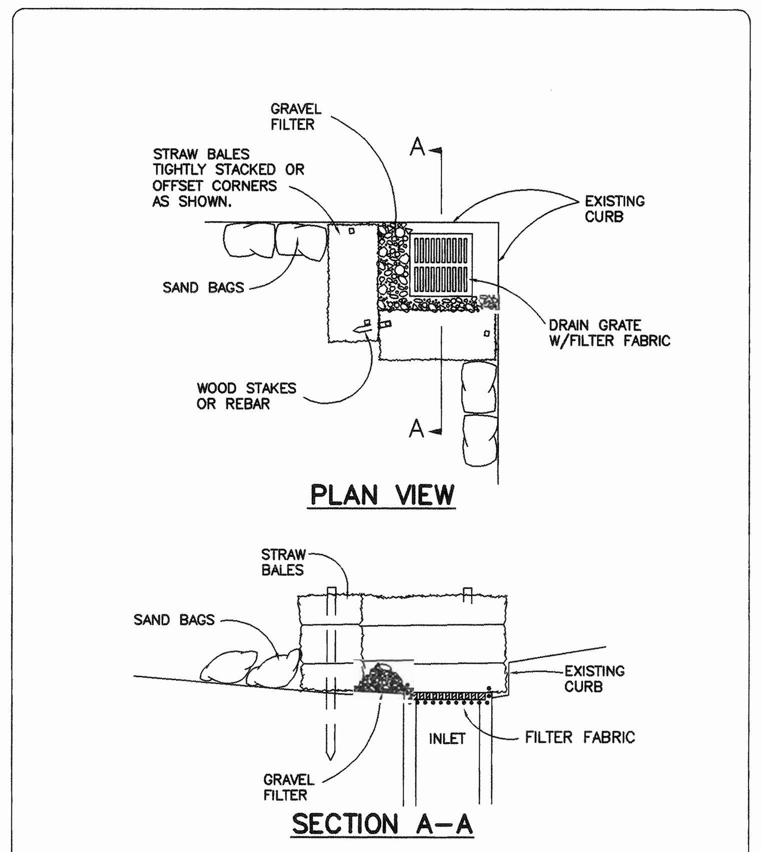

DETAIL 4
SEDIMENT TRAP

STORM WATER POLLUTION PREVENTION NOTES:

GENERAL:

STORM WATER POLLUTION HAPPENS WHEN RAIN OR RUNOFF FROM CONSTRUCTION OR OTHER ACTIVITIES WASHED CONTAMINANTS INTO STORM DRAINS, CREEKS, OR THE BAY. COMMON SOURCES INCLUDE SPILLED OIL, FUEL, AND FLUIDS FROM VEHICLES AND HEAVY EQUIPMENT; CONSTRUCTION DEBRIS; CONCRETE WASHOUT; LANDSCAPING RUNOFF CONTAINING FERTILIZERS, PESTICIDES, OR WEED KILLERS; AND MATERIALS SUCH AS USED MOTOR OIL, ANTIFREEZE, AND PAINT PRODUCTS THAT PEOPLE DEPOSIT ONTO A STREET OR ALLOW TO FLOW INTO A STORM DRAIN. EVEN PET WASTE, LEAVES, AND OTHER YARD WASTES CAN CAUSE PROBLEMS WHEN THEY ENTER STORM DRAINS OR STREAMS.

FOLLOWING THESE SIMPLE PRINCIPLES CAN REDUCE POLLUTION SIGNIFICANTLY, AND MAKE COMPLIANCE WITH ENVIRONMENTAL REGULATIONS RELATIVELY EASY.

CLEAN UP LEAKS, DRIPS AND OTHER SPILLS IMMEDIATELY SO THEY DO NOT CONTAMINATE SOIL OR GROUNDWATER, OR LEAVER RESIDUE ON PAVED SURFACES.

REFUEL VEHICLES AND HEAVY EQUIPMENT IN ONE DESIGNATED LOCATION ON THE SITE, AND TAKE CARE TO CLEAN UP SPILLS WHEN THEY HAPPEN.

NEVER HOSE DOWN "DIRTY" PAVEMENT OR SURFACES WHERE MATERIALS HAVE SPILLED. USE DRY CLEANUP METHODS WHENEVER POSSIBLE. IF YOU MUST USE WATER, USE JUST ENOUGH TO KEEP THE DUST DOWN.

CONTROL THE AMOUNT OF RUNOFF CROSSING THE SITE (ESPECIALLY DURING EXCAVATION!) BY USING BERMS OR TEMPORARY OR PERMANENT DRAINAGE DITCHES TO DIVERT WATER FLOW AROUND THE SITE. REDUCE STORM WATER RUNOFF VELOCITIES BY CONSTRUCTING TEMPORARY CHECK DAMS OR BERMS WHERE APPROPRIATE.

KEEP MATERIALS OUT OF THE RAIN – PREVENT RUNOFF CONTAMINATION AT THE SOURCE. SCHEDULE CLEARING OR EARTH MOVING ACTIVITIES FOR PERIODS OF DRY WEATHER. COVER EXPOSED PILES OF SOIL OR CONSTRUCTION MATERIALS WITH PLASTIC SHEETING OR TEMPORARY ROOFS. BEFORE IT RAINS, SWEEP AND REMOVE MATERIALS FROM SURFACES THAT DRAIN TO STORM DRAINS, CREEKS, OR CHANNELS.

KEEP POLLUTANTS OFF EXPOSED SURFACES. PLACE TRASH CANS AROUND THE SITE TO MINIMIZE LITTER. DISPOSE OF CONSTRUCTION WASTES IN COVERED DUMPSTERS OR RECYCLING RECEPTACLES.

PRACTICE SOURCE REDUCTION – MINIMIZE WASTE WHEN YOU ORDER MATERIALS. ORDER ONLY THE AMOUNT YOU NEED TO FINISH THE JOB. USE RECYCLABLE MATERIALS WHENEVER POSSIBLE. ARRANGE FOR PICK-UP OF RECYCLABLE MATERIALS SUCH AS CONCRETE, ASPHALT, SCARP METAL, SOLVENTS, DEGREASERS, CLEARED VEGETATION, PAPER, ROCK, AND VEHICLE MAINTENANCE MATERIALS SUCH AS USED OIL, ANTIFREEZE, BATTERIES, AND TIRES. DISPOSE OF ALL WASTES PROPERLY. MATERIALS THAT CANNOT BE RECYCLED MUST BE TAKEN TO AN APPROPRIATE LANDFILL OR DISPOSED OF AS HAZARDOUS WASTE. NEVER STORE OR LEAVE WASTE MATERIALS IN THE STREET.

TRAIN YOUR EMPLOYEES AND SUBCONTRACTORS. KEEP ON HAND PLENTY OF COPIES OF THE ACTIVITY SPECIFIC BROCHURES. IF YOU NEED MORE COPIES OR MASTERS TO DUPLICATE, CONTACT THE SANTA CLARA VALLEY NONPOINT SOURCE POLLUTION CONTROL PROGRAM OR THE CITY OF MILPITAS MUNICIPALITY. INFORM SUBCONTRACTORS ABOUT THE NEW STORM WATER REQUIREMENTS AND THEIR OWN RESPONSIBILITIES.

PREVENT SPILLS AND LEAKS:

POORLY MAINTAINED VEHICLES AND HEAVY EQUIPMENT LEAKING FUEL, OIL, ANTIFREEZE OR OTHER FLUIDS ON THE CONSTRUCTION SITE ARE COMMON SOURCES OF STORM WATER CONTAMINATION. CONSTRUCTION MATERIALS SPILLS CAN ALSO CAUSE SERIOUS PROBLEMS. CAREFUL SITE PLANNING, PREVENTIVE MAINTENANCE, AND GOOD MATERIALS HANDLING PRACTICES CAN ELIMINATE MOST SPILLS AND LEAKS.

PERFORM MAJOR MAINTENANCE, REPAIR JOBS, AND VEHICLE AND EQUIPMENT WASHING OFF SITE.

MAINTAIN ALL VEHICLES AND HEAVY EQUIPMENT. INSPECT FREQUENTLY FOR LEAKS.

DESIGNATE ONE AREA OF THE CONSTRUCTION SITE, WELL AWAY FROM STORM DRAIN INLETS, FOR AUTO AND EQUIPMENT PARKING AND ROUTINE VEHICLE AND EQUIPMENT MAINTENANCE.

IF YOU MUST DRAIN AND REPLACE MOTOR OIL, RADIATOR COOLANT, OR OTHER FLUIDS ONSITE., USE DRIP PANS OR DROP CLOTHS TO CATCH DRIPS AND SPILLS. COLLECT ALL SPENT FLUIDS, TORE IN SEPARATE CONTAINERS, AND RECYCLE WHENEVER POSSIBLE. NOTE THAT IN ORDER TO BE RECYCLABLE, SUCH LIQUIDS MUST NOT BE MIXED WITH OTHER FLUIDS. NON-RECYCLED FLUIDS GENERALLY MUST BE DISPOSED OF AS HAZARDOUS WASTES.

CLEAN UP SPILLS IMMEDIATELY WHEN THEY HAPPEN. WHEN VEHICLE FLUIDS OR MATERIALS SUCH A PAINTS OR SOLVENTS SPILL, CLEANUP SHOULD BE IMMEDIATE, AUTOMATIC, AND ROUTINE.

SWEEP UP SPILLED DRY MATERIALS IMMEDIATELY. NEVER ATTEMPT TO "WASH THEM AWAY" WITH WATER, OR BURY THEM. USE ONLY MINIMAL WATER FOR LUST CONTROL.

CLEAN UP LIQUID SPILLS ON PAVED OR IMPERMEABLE SURFACES USING "DRY" CLEANUP METHODS (ABSORBENT MATERIALS, CAT LITTER, AND/OR RAGS).

CLEAN UP SPILLS ON DIRT AREAS BY DIGGING UP AND PROPERLY DISPOSING OF CONTAMINATED SOIL.

REPORT SIGNIFICANT SPILLS TO THE APPROPRIATE SPILL RESPONSE AGENCIES IMMEDIATELY. (SEE REFERENCE LIST ON THIS SHEET.)

DEMOLITION WASTE:

MAKE SURE ALL DEMOLITION WASTE IS PROPERLY DISPOSED. DEMOLITION DEBRIS THAT IS LEFT IN THE STREET CAN CAUSE MAJOR PROBLEMS FOR FLOOD CONTROL, STORM DRAIN MAINTENANCE, AND THE HEALTH OF OUR ENVIRONMENT. DIFFERENT TYPES OF MATERIALS HAVE DIFFERENT DISPOSAL REQUIREMENTS.

CONCRETE DEBRIS FROM CONCRETE STRUCTURES AND BROKEN PAVEMENT SHOULD BE RECYCLED, NOT MIXED WITH OTHER DEBRIS.

DEBRIS FROM OTHER STRUCTURES (WOOD, ETC.) SHOULD BE CONFINED TO DUMPSTERS, COVERED AT NIGHT OR DURING WET WEATHER, AND TAKEN TO A LANDFILL FOR RECYCLING OR DISPOSAL.

HAZARDOUS DEBRIS SUCH AS ASBESTOS MUST BE HANDLED IN ACCORDANCE WITH SPECIFIC LAWS AND REGULATIONS AND DISPOSED OF AS A HAZARDOUS WASTE. A SEPARATE PERMIT IS REQUIRED. YOU MAY WISH TO CONTACT AN ASBESTOS REMOVAL SERVICE FOR SAFE REMOVAL AND DISPOSAL.

WASTE:

COVER AND MAINTAIN DUMPSTERS. OPEN OR LEAKING DUMPSTERS ARE A COMMON CAUSE OF STORM WATER POLLUTION.

PLACE DUMPSTERS UNDER ROOFS OR COVER THEM WITH PLASTIC SHEETING AT THE END OF EACH WORK DAY AND DURING RAINY WEATHER. IF YOU USE PLASTIC, PROTECT DUMPSTER CONTENTS FROM STORM WATER BY SECURING IT AROUND THE OUTSIDE OF THE DUMPSTER.

INSPECT DUMPSTERS REGULARLY FOR LEAKS, AND REPAIR OR REPLACE ANY DUMPSTER THAT IS NOT WATER-TIGHT.

NEVER CLEAN OUT A DUMPSTER BY HOSING IT DOWN ON THE CONSTRUCTION SITE. RETURN DUMPSTERS TO THE TRASH HAULING CONTRACT FOR CLEANING.

CONSTRUCTION MATERIALS:

STORE MATERIALS UNDER COVER. WET AND DRY BUILDING MATERIALS WITH THE POTENTIAL TO CONTAMINATE RUNOFF SHOULD ALWAYS BE STORED UNDER COVER, EVEN DURING THE WORK DAY WHEN THE WEATHER IS RAINY. IN ADDITION, BERMING AROUND A STORAGE AREA MAY BE NECESSARY FOR SOME HARD-TO-CONTAIN MATERIALS.

STORE STOCKPILED MATERIALS, WASTES, CONTAINERS, AND DUMPSTERS UNDER A TEMPORARY ROOF, OR SECURED PLASTIC SHEETING.
BERM AROUND COVERED STORAGE AREAS TO PREVENT CONTACT WITH RUNOFF.
IF YOU SUSPECT CONTAMINATION, TEST PONDED WATER AND DISPOSE APPROPRIATELY.

PLASTER OR OTHER POWDERS CAN CREATE LARGE QUANTITIES OF SUSPENDED SOLIDS IN RUNOFF, WHICH MAY BE TOXIC TO AQUATIC LIFE AND CAUSE SERIOUS ENVIRONMENTAL HARM EVEN IF THE MATERIALS ARE INSET. STORE ALL SUCH POTENTIALLY POLLUTING DRY MATERIALS – ESPECIALLY OPEN BAGS – WELL UNDER A TEMPORARY ROOF OR INSIDE A BUILDING, OR COVER SECURELY WITH AN IMPERMEABLE TARP.

PROPERLY STORE CONTAINERS OF PAINTS, CHEMICALS, SOLVENTS, AND OTHER HAZARDOUS MATERIALS IN GARAGES OR SHEDS WITH DOUBLE CONTAINMENT DURING RAINY PERIODS.

PAINTS, SOLVENTS, ADHESIVES:

CLEAN UP PAINTS, SOLVENTS, ADHESIVES, AND CLEANING SOLUTIONS PROPERLY. ALTHOUGH MANY PAINT MATERIALS CAN AND SHOULD BE RECYCLED, LIQUID RESIDUES FROM PAINTS, THINNERS, SOLVENTS, GLUES, AND CLEANING FLUIDS ARE HAZARDOUS WASTES. WHEN THEY ARE THOROUGHLY DRY, EMPTY PAINT CANS, SPENT BRUSHED, RAGS, ABSORBENT MATERIALS, AND DROP CLOTHS MAY BE DISPOSED OF AS TRASH.

NEVER CLEAN BRUSHED OR RINSE PAINT CONTAINERS INTO A STREET, GUTTER, STORM DRAIN.

FOR WATER-BASED PAINTS, PAINT OUT BRUSHES TO THE EXTENT POSSIBLE, AND RINSE TO THE SANITARY SEWER.

FOR OIL-BASED PAINTS, PAINT OUT BRUSHES TO THE EXTENT POSSIBLE, AND FILTER AND REUSE THINNERS AND SOLVENTS. DISPOSE OF EXCESS LIQUIDS AND RESIDUE AS HAZARDOUS WASTE.

RECYCLE EXCESS WATER-BASED PAINT, OR USE UP. DISPOSE OF EXCESS LIQUID, INCLUDING SLUDGES, AS HAZARDOUS WASTE.

REUSE LEFTOVER OIL-BASED PAINT. DISPOSE OF EXCESS LIQUID, INCLUDING SLUDGES, AS HAZARDOUS WASTE.

CONCRETE, CEMENT MATERIALS:

KEEP FRESH CONCRETE AND CEMENT MORTARS OUT OF GUTTERS, STORM DRAINS, AND STREAMS. CONCRETE AND CEMENT-RELATED MORTARS THAT WASH INTO GUTTERS AND STORM DRAINS ARE TOXIC TO FISH AND THE AQUATIC ENVIRONMENT.

AVOID MIXING EXCESS AMOUNTS OF FRESH CONCRETE OR CEMENT ON SITE.

STORE DRY AND WET MATERIALS UNDER COVER, PROTECTED FROM RAINFALL AND RUNOFF.

WASH OUT CONCRETE MIXERS ONLY IN DESIGNATED WASH-OUT BASIN WHERE THE WATER WILL FLOW INTO SETTLING PONDS OR ONTO DIRT OR STOCKPILES OF AGGREGATE BASE OR SAND. WHENEVER POSSIBLE, RECYCLE WASHOUT BY PUMPING BACK INTO MIXERS FOR REUSE. NEVER DISPOSE OF WASHOUT INTO THE STREET, STORM DRAINS OR DRAINAGE DITCHES.

DISPOSE OF SMALL AMOUNTS OF EXCESS CONCRETE, GROUT, AND MORTAR IN THE TRASH.

PAVEMENT CONSTRUCTION:

PLAN ROADWORK AND PAVEMENT CONSTRUCTION TO AVOID STORM WATER POLLUTION. ROAD PAVING, SURFACING, AND ASPHALT REMOVAL HAPPEN RIGHT IN THE STREET, WITH NUMEROUS OPPORTUNITIES FOR STORM DRAIN CONTAMINATION BY ASPHALT, SAW-CUT SLURRY, OR EXCAVATED MATERIAL. IN ADDITION, PROPERLY PROPORTIONED ASPHALT MIX AND WELL-COMPACTED PAVEMENT AVOID A HOST OF WATER CONTAMINATION PROBLEMS.

APPLY CONCRETE, ASPHALT, AND SEAL COAT DURING DRY WEATHER. KEEP CONTAMINANTS FROM FRESH CONCRETE AND ASPHALT OUT OF THE STORM DRAINS, CREEKS, AND BAY BY SCHEDULING PAVING JOBS DURING PERIODS OF DRY WEATHER, WHEN NEW PAVEMENT WILL HAVE TIME TO CURE BEFORE STORM WATER FLOWS ACROSS IT.

COVER CATCH BASINS AND MANHOLES WHEN APPLYING SEAL COAT, SLURRY SEAL, FOG SEAL, ETC.

ALWAYS PARK PAVERS OVER DRIP PANS OR ABSORBENT MATERIALS, SINCE THEY TEND TO DRIP CONTINUOUSLY.

SHOVEL OR VACUUM SAW-CUT SLURRY AND REMOVE FROM THE SITE. COVER OR BARRICADE STORM DRAINS DURING SAW-CUTTING TO CONTAIN SLURRY.

WASH DOWN EXPOSED AGGREGATE CONCRETE ONLY WHEN THE WASH WATER CAN 1) FLOW ONTO A DIRT AREA OR 2) DRAIN ONTO A BERMED SURFACE FROM WHICH IT CAN BE PUMPED AND DISPOSED OF PROPERLY. IF NECESSARY, PLACE HAY BALES DOWNSLOPE, OR DIVERT RUNOFF WITH TEMPORARY BERMS. MAKE SURE RUNOFF DOES NOT REACH GUTTERS OR STORM DRAINS.

NEVER WASH SWEEPINGS FROM EXPOSED AGGREGATE CONCRETE INTO A STREET OR STORM DRAIN. COLLECT AND RETURN TO AGGREGATE BASE STOCKPILE, OR DISPOSE WITH TRASH.

WHEN BREAKING ASPHALT OR CONCRETE, CONTROL EXCESS DUST USING THE SMALLEST AMOUNT OF WATER PRACTICABLE. CONTROL RUNOFF. REMOVE ALL CHUNKS AND PIECES FROM THE SITE.

RECYCLE BROKEN CONCRETE AND ASPHALT.

PREVENT EROSION:

EXPOSED SOIL AFTER CLEARING, GRADING, OR EXCAVATION POSES A CLEAR AND IMMEDIATE DANGER OF STORM WATER POLLUTION. REVEGETATION (PERMANENT OR TEMPORARY) IS AN EXCELLENT FORM OF EROSION CONTROL FOR ANY SITE.

AVOID EXCAVATION AND GRADING ACTIVITIES DURING WET WEATHER.

REMOVE EXISTING VEGETATION ONLY WHEN ABSOLUTELY NECESSARY.

PLANT TEMPORARY VEGETATION FOR EROSION CONTROL ON SLOPES OR WHERE NO CONSTRUCTION IS IMMEDIATELY PLANNED.

WHERE REPLANTING IS NOT FEASIBLE, USE SECURED PLASTIC SHEETING OR FILTER FABRIC TO STABILIZE AND PROTECT EXPOSED SOILS, STOCKPILED TOPSOIL, AND LANDSCAPING MATERIALS.

AS A LAST RESORT, PROTECT DOWNSLOPE DRAINAGE COURSES, STEAMS, OR CATCH BASINS WITH HAY BALES OR TEMPORARY DRAINAGE SWALES.

ONCE EXCAVATION AND GRADING ACTIVITIES ARE COMPLETE, PLANT PERMANENT VEGETATION AS SOON AS POSSIBLE.

CONTROL RUNOFF:

EROSION RESULTS FROM A COMBINATION OF FACTORS: DECREASED SOIL STABILITY, INCREASED RUNOFF VOLUME, AND/OR INCREASED FLOW VELOCITY. THEREFORE THE MOST EFFECTIVE EROSION CONTROL PRACTICES COMBINE DRAINAGE DIVERSION WITH SURFACE ROUGHENING.

CONSTRUCT DIVERSION DIKES AND DRAINAGE SWALES TO CHANNEL RUNOFF AROUND THE SITE. LINE SWALES WITH GRASS OR ROUGHENED PAVEMENT TO REDUCE RUNOFF VELOCITY.

USE BERMS AND DRAINAGE DITCHES TO DIVERT RUNOFF AROUND EXPOSED AREAS.

ROUGHEN OTHER SURFACE BY ADDING RIP RAP, SAND BAGS, ROCKS, STRAW BALES, OR TEMPORARY VEGETATION. DO NOT USE ASPHALT RUBBLE OR OTHER DEMOLITION DEBRIS FOR THIS PURPOSE.
CONSIDER CHECK DAMS, FILTER FABRIC, AND TERRACING.

IF NONE OF THE ABOVE MEASURES SEEMS APPROPRIATE FOR THE SITE, INSTALL SEDIMENT TRAPS IN CATCH BASINS AND DRAIN INLETS, OR CREATE AN OVERFLOW DRAIN BY RAISING THE INLET SO THAT SEDIMENTS WILL SETTLE BEFORE REACHING THE DRAIN.

PONDED STORM WATER:

CONTAIN AND TEST PONDED STORM WATER IF ANY OF THE FOLLOWING CONDITIONS APPLY:

1) IF THE CONSTRUCTION ACTIVITY IS AT A SITE OF PREVIOUS INDUSTRIAL ACTIVITY, OR
2) IF THE CONSTRUCTION SITE IS SUBJECT TO A SUPERFUND, STATE, OR LOCAL CLEANUP ORDER, OR
3) IF, IN THE OPINION OF A LOCAL AGENCY INSPECTOR, OTHER BMPS ARE NOT BEING ADEQUATELY IMPLEMENTED.

WHEN CONTAINMENT AND TESTING OF PONDED STORM WATER IS REQUIRED:

PUMP TO A STORAGE TANK AND TAKE SAMPLES.

TEST THE SAMPLES FOR KNOWN OR SUSPECTED POLLUTANTS.

CALL THE REGIONAL WATER QUALITY CONTROL BOARD FOR FURTHER GUIDANCE, INCLUDING ACTIONS TO TAKE IF POLLUTANTS ARE PRESENT.

DEWATERING:

TEST GROUNDWATER FROM DEWATERING OPERATIONS. CONTAMINATED GROUNDWATER IS A COMMON PROBLEM IN THE SANTA CLARA VALLEY.

CONTACT THE SAN FRANCISCO BAY REGIONAL WATER QUALITY CONTROL BOARD AND THE LOCAL (MUNICIPAL) WASTE WATER TREATMENT AUTHORITY (SEE REFERENCES ON THIS SHEET) TO DETERMINE DISPOSAL RESTRICTIONS, PERMIT AND TREATMENT REQUIREMENTS, AND OTHER WATER QUALITY TESTS THAT MUST BE CONDUCTED BEFORE ANY WATER IS DISCHARGED.

IF OFF-SITE POLLUTANTS ARE SUSPECTED, CONTACT THE SANTA CLARA VALLEY WATER DISTRICT'S GROUNDWATER PROTECTION DIVISION OR THE SAN FRANCISCO BAY REGIONAL WATER QUALITY CONTROL BOARD.

WITH A PERMIT FROM THE REGIONAL WATER QUALITY CONTROL BOARD, YOU MAY BE ABLE TO RECYCLE/REUSE PUMPED GROUNDWATER FOR LANDSCAPE IRRIGATION, OR DISCHARGE TO THE STORM DRAINS. WITH A PERMIT FROM THE MUNICIPALITY AND/OR THE MUNICIPAL WASTEWATER TREATMENT PLANT, YOU MAY BE ABLE TO TREAT GROUNDWATER AND DISCHARGE TO THE SANITARY SEWER.

CONTAMINATED SOIL:

TEST FOR CONTAMINATED SOIL. INDICATIONS OF CONTAMINATED SOILS INCLUDE DISCOLORATION, ODOR, OR UNUSUAL SOIL PROPERTIES THAT MAY BE OBSERVED DURING CONSTRUCTION WORK. PRESENCE OF ABANDONED UNDERGROUND TANKS OR DISCOVERY OF BURIED DEBRIS OR TRASH ARE ALSO INDICATORS OF POTENTIAL CONTAMINATION.

IF CONTAMINATION IS SUSPECTED, TEST FOR POLLUTANTS, OR CALL THE REGIONAL WATER QUALITY CONTROL BOARD FOR GUIDANCE.

IF CONTAMINATION IS DETECTED, YOU MUST DEVELOP A REMEDIATION PLAN FOR APPROVAL BY THE SAN FRANCISCO BAY REGIONAL WATER QUALITY CONTROL BOARD AND THE CALIFORNIA DEPARTMENT OF TOXIC SUBSTANCES CONTROL. CHECK WITH YOUR LOCAL MUNICIPALITY FOR ADDITIONAL REQUIREMENTS.

AGENCIES TO CALL IN THE EVENT OF A SPILL:

YOU ARE REQUIRED BY LAW TO REPORT ALL SIGNIFICANT RELEASES OR SUSPECTED SIGNIFICANT RELEASES OF HAZARDOUS MATERIALS, INCLUDING OIL. TO REPORT A SPILL, CALL THE FOLLOWING AGENCIES:

1) DIAL 911 OR YOUR LOCAL EMERGENCY RESPONSE NUMBER.
2) CITY OF MILPITAS PUBLIC WORKS DEPARTMENT, SKIP EVANS (408) 586-3053
3) CALL THE SANTA CLARA VALLEY WATER DISTRICT, ENVIRONMENTAL COMPLIANCE DIVISION (408) 927-0710 (MONDAY THROUGH FRIDAY, 7:30 a.m. TO 5 p.m.)
4) CALL THE GOVERNOR'S OFFICE OF EMERGENCY SERVICES WARNING CENTER, (800) 852-7550 (24 HOURS).

FOR SPILLS OF "FEDERAL REPORTABLE QUANTITIES' OF OIL, CHEMICALS, OR OTHER HAZARDOUS MATERIALS TO LAND, AIR, OR WATER, NOTIFY THE NATIONAL RESPONSE CENTER (800-424-8802). IF YOU ARE NOT SURE WHETHER THE SPILL IS OF A "REPORTABLE QUANTITY," CALL THE FEDERAL ENVIRONMENTAL PROTECTION AGENCY (800-424-9346) FOR CLARIFICATION.

AGENCIES TO CALL IF CONTAMINATED SOIL OR GROUNDWATER IS SUSPECTED:

1) SANTA CLARA VALLEY WATER DISTRICT GROUNDWATER PROTECTION DIVISION (408) 927-0710.
2) REGIONAL WATER QUALITY CONTROL BOARD, SAN FRANCISCO BAY REGION, (510) 464-1255.
3) CITY OF MILPITAS.
4) CALIFORNIA ENVIRONMENTAL PROTECTION AGENCY (CAL EPA) DEPARTMENT OF TOXIC SUBSTANCES CONTROL (STSC) (510) 540-3732.

WASTEWATER TREATMENT AUTHORITIES AND POLLUTION CONTROL AGENCIES:

SAN JOSE/SANTA CLARA WATER POLLUTION CONTROL PLANT, DEPARTMENT OF INDUSTRIAL WASTE, (408) 945-5300.

SANTA CLARA VALLEY NONPOINT SOURCE POLLUTION CONTROL PROGRAM, 5750 ALMADEN EXPRESSWAY, SAN JOSE, CA 95118, (800) 794-2482.

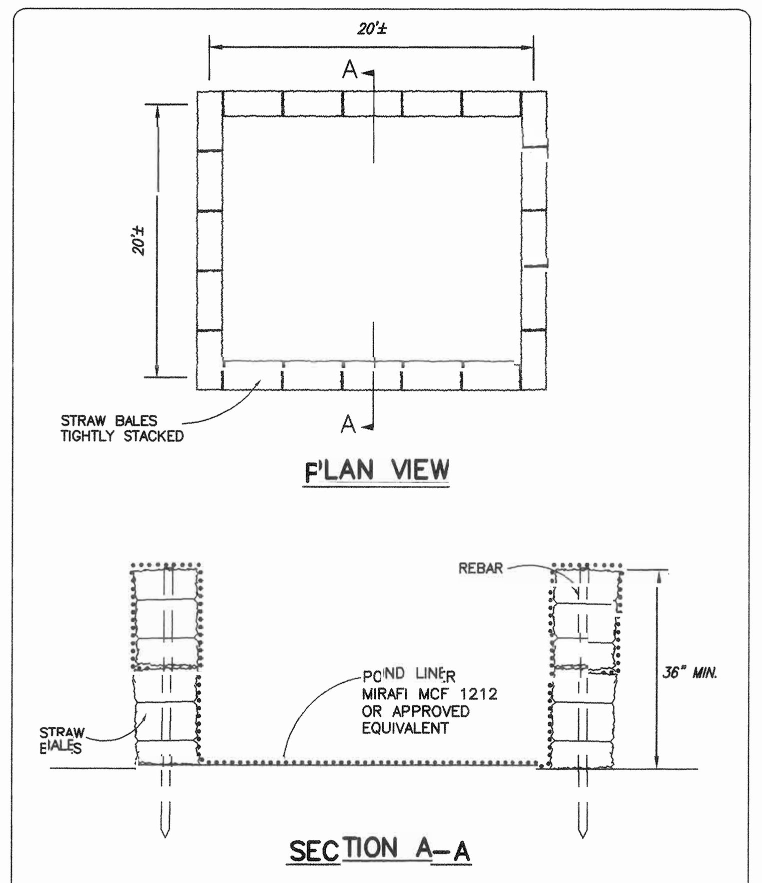

DETAIL 5
CONCRETE TRUCK WASH-OUT BASIN

Erosion Control Notes & Details

milpitas civic center
parking, circulation & streetscape renovation

8143, 4140, & 4194

STUDIOS architecture
99 GREEN ST. SAN FRANCISCO, CA 94111

Associate Architect
Michael Willis Architects

Landscape Architect
SWA Group

Engineers
Sandis Humber Jones

ISSUE FOR: DATE:

100% construction documents 6.5.01

N

Erosion Control Notes & Details

C7.1

PROJECT NO. 99340.00
SHJ PROJECT NO. 299203

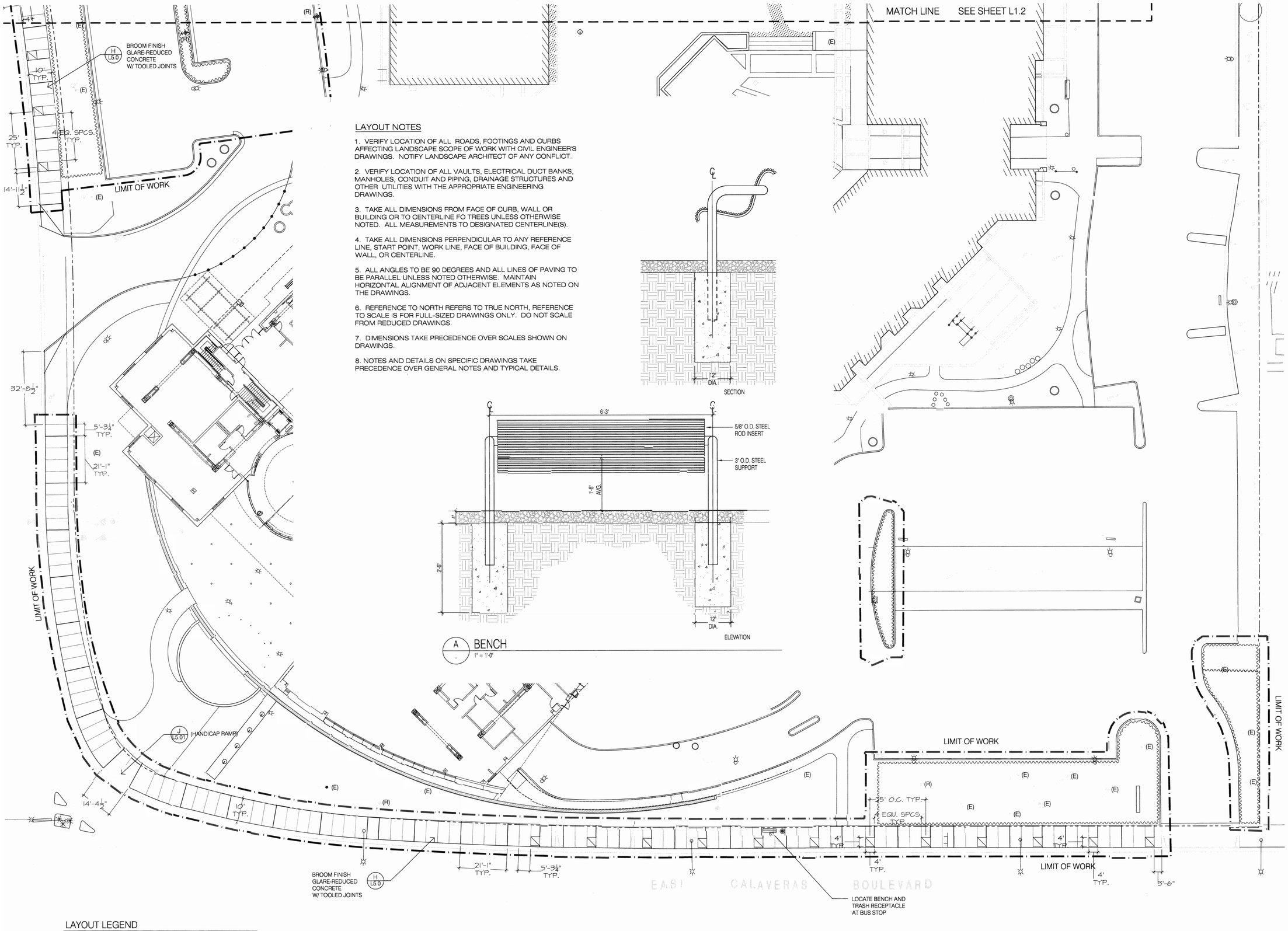

LAYOUT NOTES

1. VERIFY LOCATION OF ALL ROADS, FOOTINGS AND CURBS AFFECTING LANDSCAPE SCOPE OF WORK WITH CIVIL ENGINEER'S DRAWINGS. NOTIFY LANDSCAPE ARCHITECT OF ANY CONFLICT.

2. VERIFY LOCATION OF ALL VAULTS, ELECTRICAL DUCT BANKS, MANHOLES, CONDUIT AND PIPING, DRAINAGE STRUCTURES AND OTHER UTILITIES WITH THE APPROPRIATE ENGINEERING DRAWINGS.

3. TAKE ALL DIMENSIONS FROM FACE OF CURB, WALL OR BUILDING OR TO CENTERLINE FO TREES UNLESS OTHERWISE NOTED. ALL MEASUREMENTS TO DESIGNATED CENTERLINE(S).

4. TAKE ALL DIMENSIONS PERPENDICULAR TO ANY REFERENCE LINE, START POINT, WORK LINE, FACE OF BUILDING, FACE OF WALL, OR CENTERLINE.

5. ALL ANGLES TO BE 90 DEGREES AND ALL LINES OF PAVING TO BE PARALLEL UNLESS NOTED OTHERWISE. MAINTAIN HORIZONTAL ALIGNMENT OF ADJACENT ELEMENTS AS NOTED ON THE DRAWINGS.

6. REFERENCE TO NORTH REFERS TO TRUE NORTH, REFERENCE TO SCALE IS FOR FULL-SIZED DRAWINGS ONLY. DO NOT SCALE FROM REDUCED DRAWINGS.

7. DIMENSIONS TAKE PRECEDENCE OVER SCALES SHOWN ON DRAWINGS.

8. NOTES AND DETAILS ON SPECIFIC DRAWINGS TAKE PRECEDENCE OVER GENERAL NOTES AND TYPICAL DETAILS.

LAYOUT LEGEND

- CONCRETE PAVING — TOOLED JOINT — EXPANSION JOINT (H L5.0, I L5.0)
- PLANTING AREA
- EXPOSED AGGREGATE PAVING, SEE SPECS. — TOOLED JOINT — EXPANSION JOINT (H L5.0, I L5.0)
- BENCH (A -)
- (E) EXISTING TREE TO REMAIN WITHIN L.O.W
- (R) RELOCATED TREE
- PROPERTY LINE
- LIMIT OF WORK LINE
- MATCH LINE
- TRASH RECEPTACLE
- TREE WELL (E L5.0, G L5.0)
- (R) RELOCATED PARKING LOT LIGHT FIXTURE*
- (N) NEW PARKING LOT LIGHT FIXTURE TO MATCH EXISTING *

* All new and existing parking lot light fixtures are to be re-lamped with the Phillips Ceramalux Comfort lamp C400S51/C (15,000 hours, 37,500 lumens, 65 CRI). Exact fixture location and distributions pending lighting calculation results.

milpitas civic center
parking, circulation & streetscape renovation

8143, 4140, & 4194

STUDIOS architecture
99 GREEN ST. SAN FRANCISCO, CA 94111 415.398.7575

Associate Architect
Michael Willis Architects

Landscape Architect
SWA Group

Engineers
Ove Arup & Partners USA

ISSUE FOR:	DATE:
100% construction documents	6.5.01

landscape
layout plan
- south area

L1.1

8 16 32

PROJECT NO 99340.00

milpitas civic center
parking, circulation & streetscape renovation

8143, 4140, & 4194

STUDIOS architecture
919 GREEN ST. SAN FRANCISCO, CA 94111 415.398.7575

Associate Architect
Michael Willis Architects

Landscape Architect
SWA Group

Engineers
Ove Arup & Partners USA

ISSUE FOR:	DATE:

100% construction documents 6.5.01

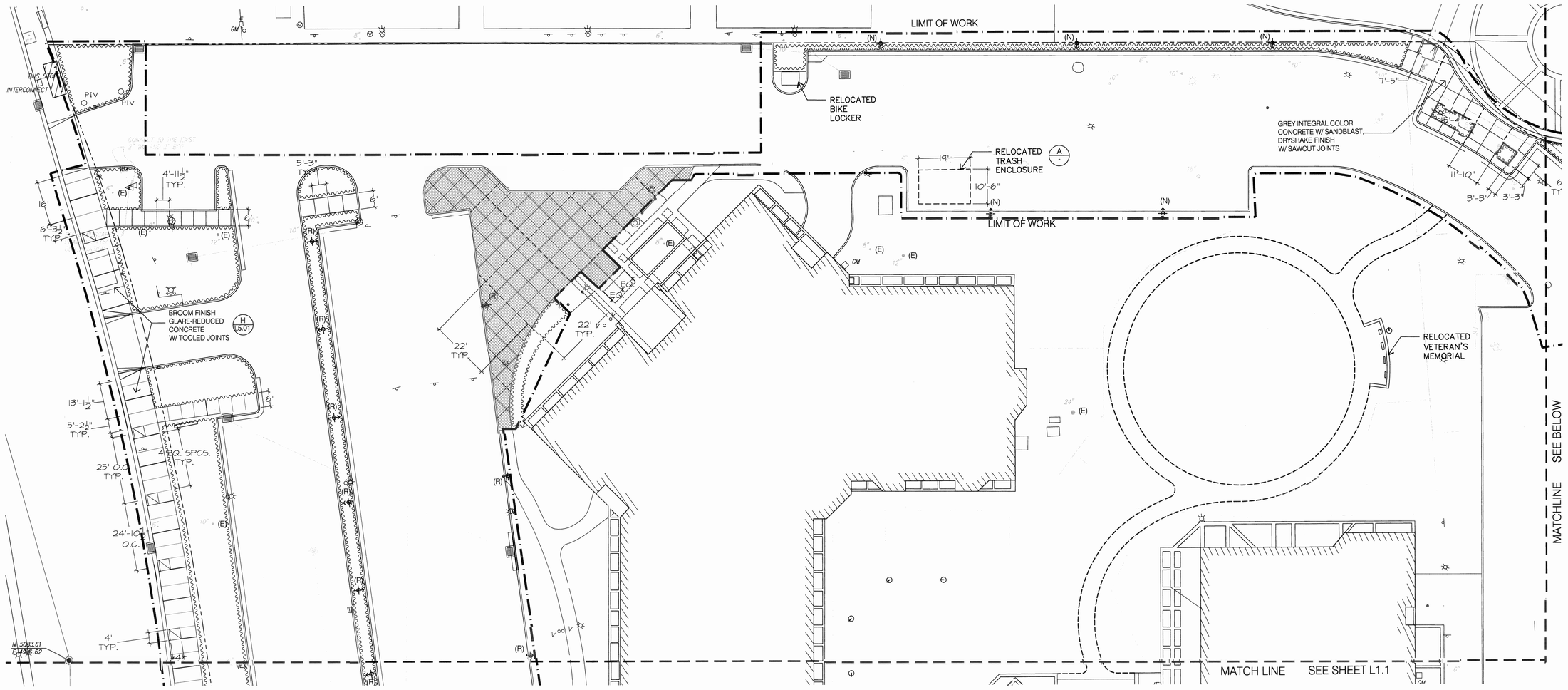

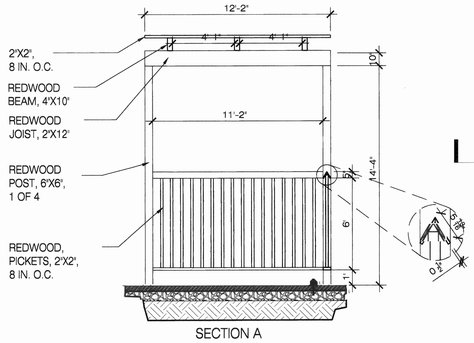

SECTION A

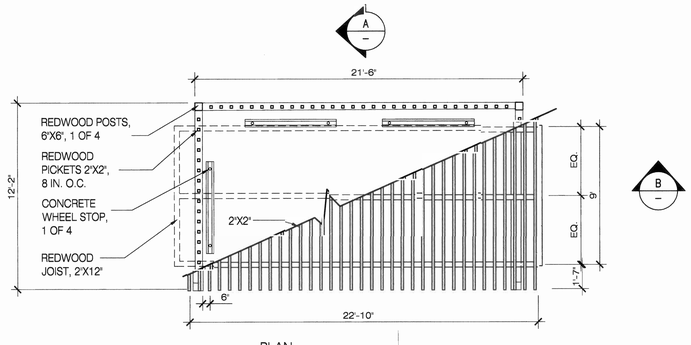

PLAN

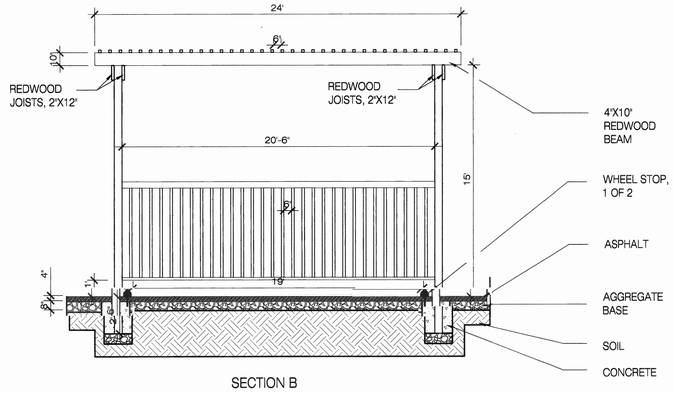

SECTION B

NOTE: USE ALL GALVANIZED METAL FASTNERS DESIGN BUILD. SUBMIT SHOP DRAY AND MATERIALS FOR APPROVAL.
STAIN ALL WOOD TO MATCH EXISTING. USE ALL SAS CON. HEART REDWOOD, W/ RED TINT, UNLESS OTHERWISE SPECIFIED.

K TRASH ENCLOSURE
SCALE 1'=1/4".

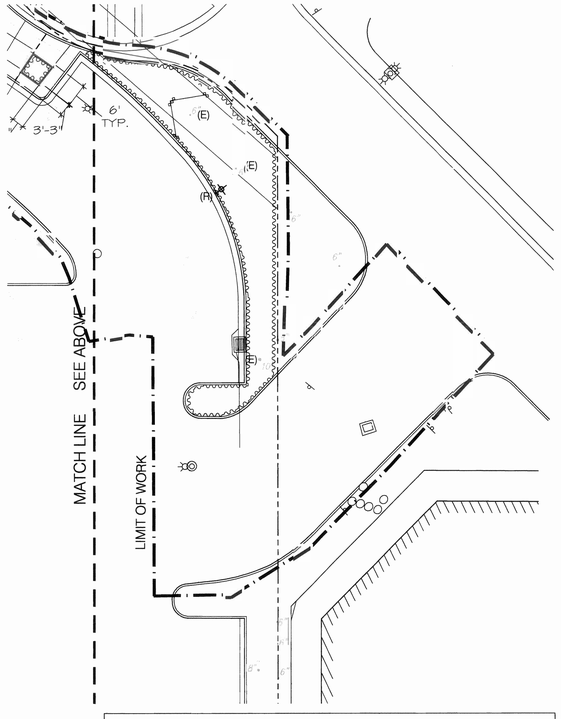

NOTE: FOR LEGEND & LAYOUT NOTES SEE SHEET L1.1

landscape layout plan - north area & detail

L1.2

PROJECT NO 99349.00

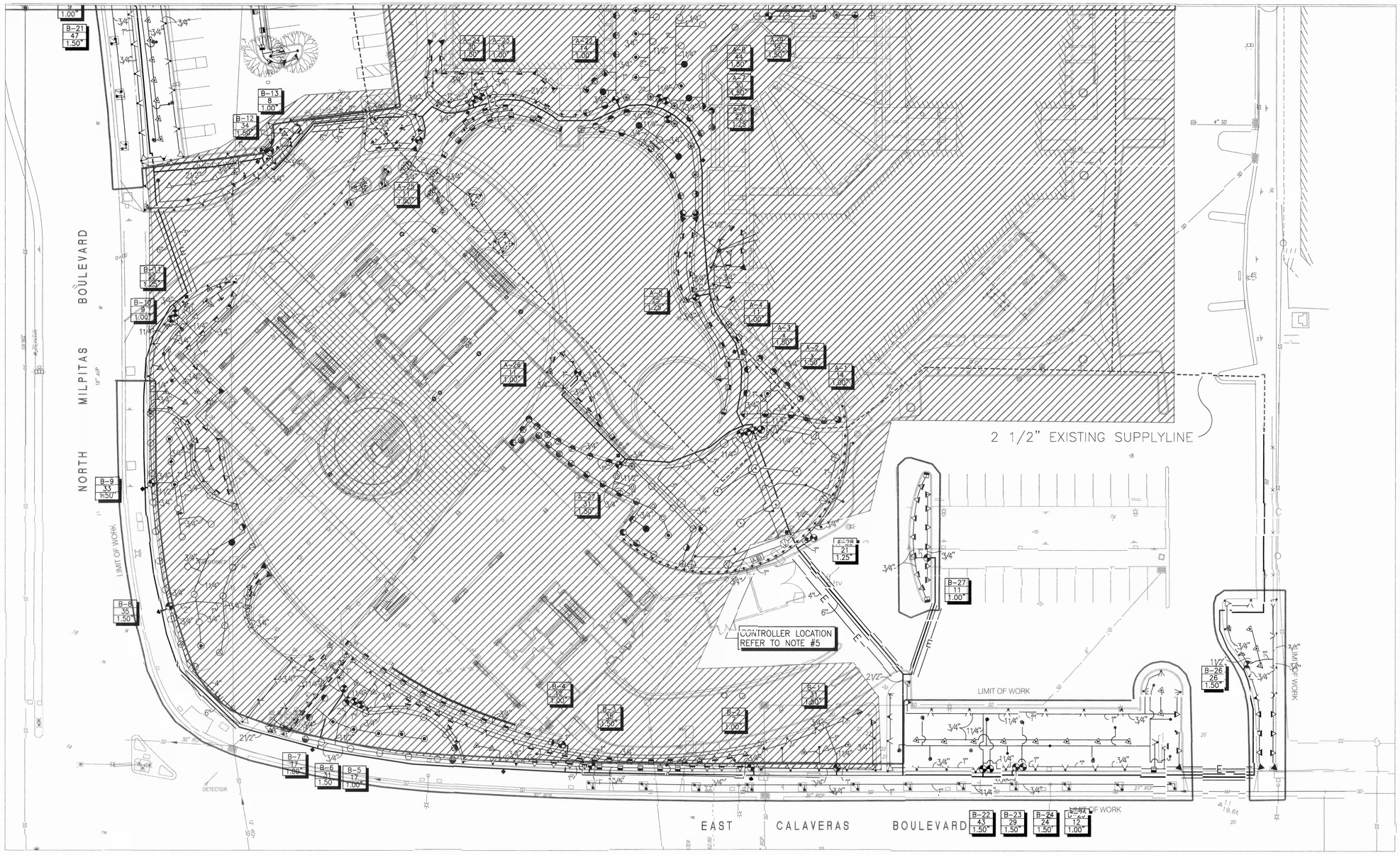

NOTE:

AREAS WITHIN HATCHED AREA TO BE INSTALLED DURING PHASE TWO IRRIGATION.

EXISTING PLANTING AREAS WITH INTERRUPTED IRRIGATION SERVICE DUE TO CONSTRUCTION SHALL BE HAND WATERED DURING CONSTRUCTION.

CONNECTION TO EXISTING IRRIGATION SYSTEM WILL BE REQUIRED TO ENSURE ALL PLANTING AREAS, NEW AND EXISTING, ARE IRRIGATED UPON JOB COMPLETION.

NEW IRRIGATION CONTROLLER SHAL BE INSTALLED FOR NEW AND EXISTING IRRIGATION AREAS. CONTROLLER SHALL BE CITY APPROVED.

LYLE L. MUNTON CERTIFIED IRRIGATION DESIGNER COMMERCIAL 000026

I.S.C. GROUP, INC. IRRIGATION SYSTEM CONSULTANTS
MEMBER • AMERICAN SOCIETY OF IRRIGATION CONSULTANTS
1799 Portola Avenue, Suite 2, Livermore, CA 94550
Phone 925/371-8230 Fax 925/371-8240

© All ideas, designs, and specifications represented are the property of I.S.C. Group, Inc. and are protected by copyright laws.
99120-200

milpitas civic center

parking, circulation & streetscape renovation

8143, 4140, & 4194

STUDIOS architecture
99 GREEN ST. SAN FRANCISCO, CA 94111 415.398.7575

Associate Architect
Michael Willis Architects

Landscape Architect
SWA Group

Engineers
Ove Arup & Partners USA

ISSUE FOR:	DATE:
100% construction documents	6.5.01

landscape irrigation plan

L3.01

PROJECT NO. 99540.00

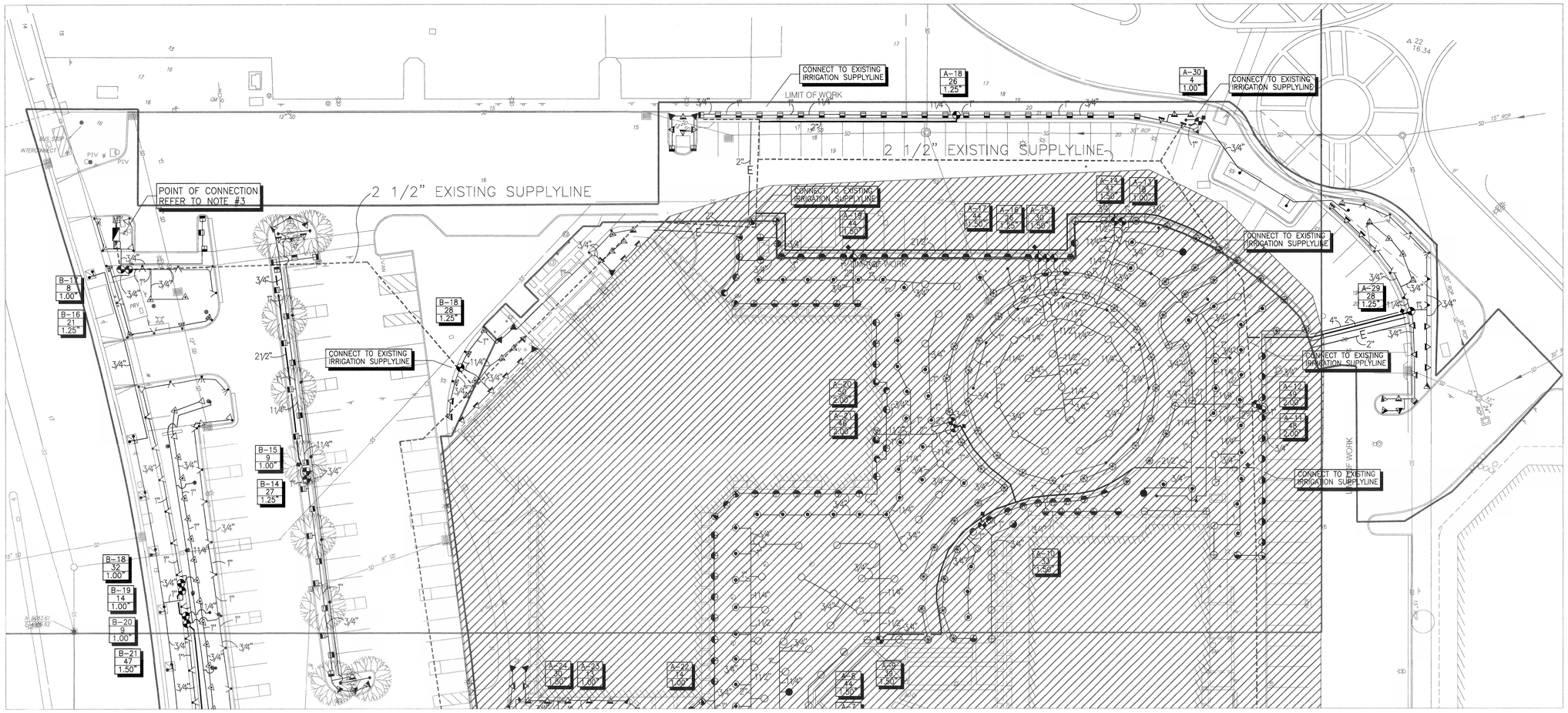

I.S.C. GROUP, INC. IRRIGATION SYSTEM CONSULTANTS
MEMBER • AMERICAN SOCIETY OF IRRIGATION CONSULTANTS
1799 Portola Avenue, Suite 2, Livermore, CA 94550
Phone 925/371-8230 Fax 925/371-8240
© All ideas, designs, and specifications represented are the property of I.S.C. Group, Inc. and are protected by copyright laws.
99120-200

milpitas civic center
parking, circulation & streetscape renovation
8143, 4140, & 4194

STUDIOS architecture
9-9 GREEN ST. SAN FRANCISCO, CA 94111 415.398.7575

Associate Architect
Michael Willis Architects

Landscape Architect
SWA Group

Engineers
Ove Arup & Partners USA

ISSUE FOR:	DATE:
100% construction documents	6.5.01

N

10' 20' 40'

landscape irrigation plan

L3.02

PROJECT NO. 99540.00

NOTE: CONTROLLER SHALL BE PROPERLY GROUNDED PER ARTICAL 250 OF THE NATIONAL ELECTRIC CODE AND CONFORM TO LOCAL REGULATIONS.

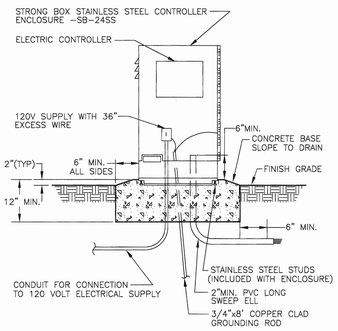

PEDESTAL MOUNT CONTROLLER INSTALLATION DETAIL

NTS

UNPUBLISHED WORK © 1999 I.S.C. GROUP, INC.

IRRIGATION SYSTEM LEGEND

EXISTING 2" IRRIGATION WATER METER	
EXISTING 2" RP BACKFLOW PREVENTION ASSEMBLY	
FLOW SENSOR	–CALSENSE–FM–1.5
ELECTRIC CONTROLLERS	–CALSENSE–ET2000–40–M–RR
RAIN SENSOR IN ENCLOSURE	–WATER CONSERVATION SYSTEMS–RG,RGVR–S
REMOTE CONTROL VALVES	–WEATHERMATIC–11000CR SERIES
QUICK COUPLING VALVES	–BUCKNER–QB3LRC07
BALL VALVES –LINE SIZE	–SEE DETAIL
4" POP–UP STREAM ROTOR	–TORO–3416–00–15
4" POP–UP STREAM ROTOR	–TORO–3416–08–15
4" POP–UP STREAM ROTOR	–TORO–3406–00–15
4" POP–UP STREAM ROTOR	–TORO–3404–00–15
SHRUB/GROUND COVER AREAS:	
6" POP–UP SPRAY HEADS	–RAINBIRD–1806–SAM–PCS–15F,TQ,TT,H,T,Q
6" POP–UP SPRAY HEADS	–RAINBIRD–1806–SAM–PCS–12F,TQ,TT,H,T,Q
6" POP–UP SPRAY HEADS	–RAINBIRD–1806–SAM–PCS–10F,H,T,Q
6" POP–UP SPRAY HEADS	–RAINBIRD–1806–SAM–PCS–8F,H,T,Q
6" POP–UP SPRAY HEADS	–RAINBIRD–1806–SAM–PCS–5H,T,Q
TURF AREAS:	
6" POP–UP SPRAY HEADS	–RAINBIRD–1806–SAM–PCS–15F,TQ,TT,H,T,Q
6" POP–UP SPRAY HEADS	–RAINBIRD–1806–SAM–PCS–12F,TQ,TT,H,T,Q
6" POP–UP SPRAY HEADS	–RAINBIRD–1806–SAM–PCS–10F,H,T,Q
6" POP–UP SPRAY HEADS	–RAINBIRD–1806–SAM–PCS–8F,H,T,Q
6" POP–UP SPRAY HEADS	–RAINBIRD–1806–SAM–PCS–5H,T,Q

NOTE: CIRCLE AROUND 6" POP–UP SPRAY HEAD SYMBOL INDICATES THAT A RAINBIRD MODEL 1812–SAM BODY IS TO BE USED.

STREAM BUBBLERS–STRIPS	–RAINBIRD–1804–SAM–PCS–040–15CST
BUBBLERS–FLOODING	–RAINBIRD–1300A

IRRIGATION SUPPLYLINE–2" & 2 1/2"	–1120/CLASS 315 PVC PIPE	–18" COVER
IRRIGATION SUPPLYLINE–1 1/2" & SMALLER	–1120/SCHEDULE 40 PVC PIPE	–18" COVER
IRRIGATION SPRINKLERLINE	–1120/CLASS 200 PVC PIPE	–12" COVER
ELECTRICAL CONDUIT–SIZE AS INDICATED	–1120/SCHEDULE 40 PVC PIPE	–24" COVER
SLEEVING–SIZE AS INDICATED	–1120/SCHEDULE 40 PVC PIPE	–24" COVER

NOTE: CIRCLED SIZE INDICATES ELECTRICAL CONDUIT OR SLEEVING.

CONTROLLER STATION NUMBER
GALLONS PER MINUTE THROUGH VALVE
CONTROL VALVE SIZE

IRRIGATION SYSTEM NOTES

1. SPRINKLER SYSTEM ISDESIGNED FOR A MAXIMUM OF 80 G.P.M. FOR AT 60 P.S.I. STATIC PRESSURE. SET PRESSURE REGULATOR AT P.S.I. VERIFY PRESSURE OF P.S.I. AT THE POINT OF CONNECTION PRIOR TO INSTALLATION OF THE IRRIGATION SYSTEM. NOTIFY IRRIGATION CONSULTANT IF MEASURED PRESSURE IS MORE THAN 75 P.S.I. OR LESS THAN 55 P.S.I.
2. NOTIFY LANDSCAPE ARCHITECT/ IRRIGATION CONSULTANT SIX (6) DAYS PRIOR TO INSTALLATION FOR A PRE–INSTALLATION CONFERENCE AND FIELD REVIEW COORDINATION FOR TRENCH DEPTHS, ASSEMBLY REVIEW, PRESSURE TESTS, COVERAGE TESTS, PRE– MAINTENANCE AND FINAL REVIEWS. NO SUBSTITUTIONS WILL BE ALLOWED WITHOUT PRIOR WRITTEN APPROVAL FROM THE IRRIGATION CONSULTANT. NOTIFY RIVER WEST DEVELOPMENT REPRESENTATIVE A MINIMUM OF 48 HOURS PRIOR TO ANY FIELD REVIEWS.
3. EXISTING 2" IRRIGATION WATER METER AND BACKFLOW ASSEMBLY AT LOCATION SHOWN. CONNECT TO DISCHARGE SIDE OF BACKFLOW ASSEMBLY.
4. INSTALL CONTROLLER WHERE INDICATED AND AS DETAILED. EXACT LOCATION OF CONTROLLER TO BE DETERMINED AT JOBSITE BY ARCHITECT. EXISTING 120 VOLT ELECTRICAL SUPPLY IS PROVIDED AT EXISTING CONTROLLER LOCATION. MAKE FINAL 120 VOLT ELECTRICAL CONNECTION TO SWITCH BOX. USE THIN WALL METAL CONDUIT ABOVE GRADE. USE WATERPROOF CONNECTIONS FOR OUTDOOR INSTALLATION. PROGRAM CONTROLLERS TO NOT EXCEED MAXIMUM FLOW RATE STATED IN NOTE NO. 1. INSTALL PER MANUFACTURERS SPECIFICATIONS. PROVIDE AND INSTALL RECHARGEABLE BATTERY BACK–UP FOR CONTROLLER(S). INSTALL CONDUIT FROM CONTROLLER TO ADJACENT PLANTER FOR L.V. WIRES. INSTALL SEPARATE COMMON WIRE FOR EACH CONTROLLER. CONTROLLER(S) SHALL BE PROPERLY GROUNDED PER ARTICLE 250 OF THE NATIONAL ELECTRIC CODE AND CONFORM TO LOCAL REGULATIONS. INSTALL AS DETAILED. SEAL ALL CONDUIT HOLES WITH SILICONE OR EQUAL. PROGRAM CONTROLLER(S) TO IRRIGATE SLOPES USING MULTIPLE REPEAT CYCLES OF SHORT DURATIONS. CARE SHALL BE TAKEN TO PREVENT RUNOFF OF WATER AND SLOPE/SOIL EROSION DUE TO PROLONGED APPLICATIONS OF WATER.
5. INSTALL RAIN SENSOR IN VANDAL RESISTANT ENCLOSURE AS DETAILED. ALL WIRING TO BE PER MANUFACTURERS SPECIFICATIONS. INSTALL SINGLE POLE SINGLE THROW (SPST) SWITCH ON 24 VAC LEAD GOING TO SENSOR TO PROVIDE OVERRIDE CAPABILITY.
6. INSTALL MASTER VALVE, REMOTE CONTROL VALVES, QUICK COUPLING VALVES AND SHUTOFF VALVES AS DETAILED. INSTALL R.C.V. ID TAGS MANUFACTURED BY T. CHRISTY ENT. STANDARD SIZE, 1 1/8" HOT STAMPED BLACK LETTERS ON YELLOW BACKGROUND ON SOLENOID WIRES. LETTERS TO CONFORM TO CONTROLLER/STATION NUMBER.
7. ALL SPRINKLER HEADS SHALL HAVE RISER ASSEMBLIES AS DETAILED. ALL HIGH POP–UPS ADJACENT TO CURBS SHALL BE INSTALLED AT PAINTED PARKING STALL LINES WHERE INDICATED. LEAN SPRINKLER HEADS ON SLOPES (ANGLE VARIES DEPENDING UPON TRAJECTORY OF SPRAY AND DEGREE OF SLOPE) TO MAXIMIZE UPHILL THROW. INSTALL FLOOD BUBBLERS ON UP HILL SIDE OF SHRUBS AND TREES.
8. ADJUST ALL SPRINKLER HEADS FOR COMPLETE COVERAGE WITH MINIMUM SPRAY ON ASPHALT, SIDEWALKS, ROADWAYS, ETC., AND THROTTLE FLOW CONTROL AT VALVES FOR OPTIMUM OPERATION (OVERSPRAY ONTO BUILDINGS WILL NOT BE ALLOWED. WHEN THROTTLING IS NOT USED TO CONTROL MISTING OR OVERSPRAY, BACK–OFF MANUAL FLOW CONTROL 1/2 TO 1 1/2 TURNS FROM POINT WHERE CLOSING EFFECTS SPRINKLER COVERAGE.
9. ALL PIPE UNDER ASPHALT PAVEMENT SHALL BE SCHEDULE 40 PVC FOR 1 1/2" AND SMALLER AND CLASS 315 PVC FOR 2" AND LARGER. ALL PIPE AND WIRING UNDER ASPHALT PAVEMENT SHALL BE INSTALLED AT A TWENTY FOUR INCH (24") DEPTH BELOW GRADE. ALL PIPE AND WIRING UNDER ASPHALT PAVEMENT SHALL BE INSTALLED IN PVC SCHEDULE 40 SLEEVING AND ELECTRICAL CONDUIT. SLEEVING AND ELECTRICAL CONDUIT SHALL EXTEND SIX INCHES (6") BEYOND EDGE OF PAVEMENT OR CURB. CONTRACTOR HAS THE OPTION OF INSTALLING PVC SCHEDULE 40 SLEEVING FOR ALL PIPING UNDER ASPHALT AND CONCRETE PAVEMENTS AT HIS OWN EXPENSE. INSTALL SAND FOR BACKFILL IN ASPHALT PAVEMENT AREAS TO 6" COVER ABOVE PIPE. SURROUND PIPE WITH SAND IN AREAS WHERE ROCKY TERRAIN IS ENCOUNTERED.
10. ALL VALVE CONTROL WIRE SHALL BE MINIMUM NO. 14 AWG COPPER UL APPROVED FOR DIRECT BURIAL IN GROUND. SIZE WIRING PER CONTROLLER AND VALVE MANUFACTURERS RECOMMENDATIONS. CONNECT WIRES AS DETAILED PER MANUFACTURERS SPECIFICATIONS. RUN ONE (1) EXTRA CONTROL WIRE OF DIFFERENT COLOR THROUGH ALL VALVE LOCATIONS FROM EACH CONTROLLER. EACH WIRE AT VALVES SHALL HAVE 24" EXCESS COILED LOOP IN VALVE BOXES. TAPE WIRES IN BUNDLES EVERY TEN FEET (10').

17. REFER TO SPECIFICATIONS FOR FURTHER INFORMATION REGARDING THIS PROJECT.

I.S.C. IRRIGATION SYSTEM GROUP, INC. CONSULTANTS
MEMBER • AMERICAN SOCIETY OF IRRIGATION CONSULTANTS
1799 Portola Avenue, Suite 2, Livermore, CA 94550
Phone 925/371–8230 Fax 925/371–8240

© All ideas, designs, and specifications represented are the property of I.S.C. Group, Inc. and are protected by copyright laws.

99–20–020

milpitas civic center
parking, circulation & streetscape renovation

8143, 4140, & 4194

STUDIOS architecture
99 GREEN ST. SAN FRANCISCO, CA 94111 415.398.7575

Associate Architect
Michael Willis Architects

Landscape Architect
SWA Group

Engineers
Ove Arup & Partners USA

ISSUE FOR:	DATE:
100% construction documents	6.5.01

landscape irrigation notes & legend

L3.03

PROJECT NO 99340.00

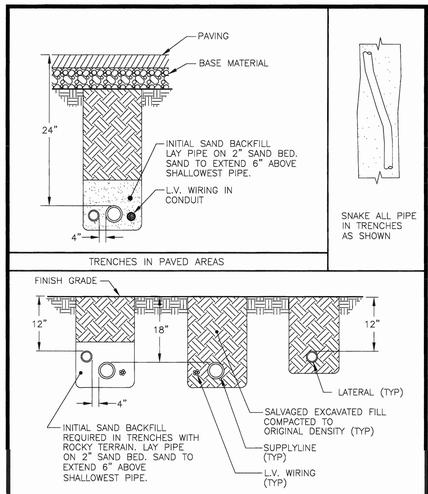

A TRENCHING DETAILS
NTS

UNPUBLISHED WORK © 1998 I.S.C. GROUP, INC.

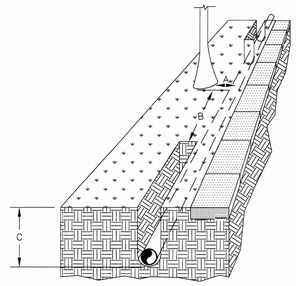

TREE DIAMETER		DISTANCE OF TUNNEL FROM EACH SIDE OF TREETRUNK "A"		DISTANCE OF OPEN TRENCH FROM TREE–TRUNK "B"		DEPTH OF TUNNEL OR TRENCH "C"	
mm	in	m	in	m	ft	m	ft
50	2	0.6	2	0.9	3	0.9	3.0
75	3	0.9	3	1.8	6	1.0	3.25
150	6	1.5	5	3.0	10	1.0	3.33
300	12	1.8	6	3.6	12	1.1	3.67
450	18	2.1	7	4.2	14	1.2	4.0
600	24	2.4	8	4.8	16	1.3	4.33
750	30	2.7	9	5.5	18	1.4	4.67
900	36	3.0	10	6.0	20	1.5	4.83
1050	42	3.6	12	6.6	22	1.5	5.0

TUNNELING DETAIL
NTS

UNPUBLISHED WORK © 1998 I.S.C. GROUP, INC.

NOTES:
1. CENTER BOXES OVER VALVES.
2. SET BOXES IN GROUND COVER/SHRUB AREA WHERE POSSIBLE.
3. SET BOXES PARALLEL TO EACH OTHER AND PERPENDICULAR TO EDGE.
4. AVOID HEAVILY COMPACTING SOIL AROUND BOXES TO PREVENT DAMAGING VALVE BOXES.

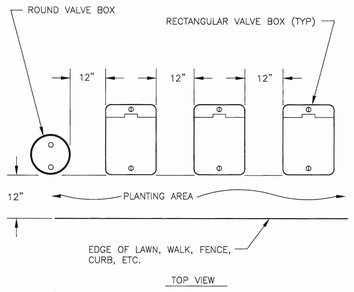

VALVE BOX INSTALLATION DETAIL
NTS

UNPUBLISHED WORK © 1998 I.S.C. GROUP, INC.

NOTE:
1. SET TOP OF BOX EVEN WITH FINISH GRADE IN TURF AREAS.
2. ALLOW 10 PIPE DIAMETERS UPSTREAM AND 5 PIPE DIAMETERS DOWNSTREAM FROM SENSOR OF STRAIGHT UNOBSTRUCTED PIPE TO ENSURE PROPER FLOW READING.

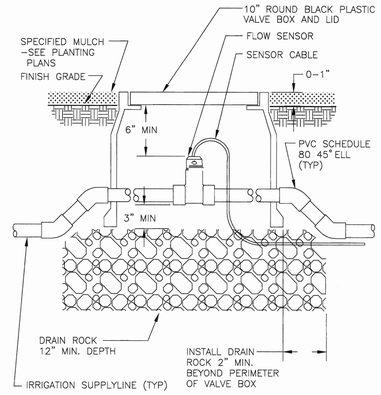

FLOW SENSOR INSTALLATION DETAIL
NTS

UNPUBLISHED WORK © 1998 I.S.C. GROUP, INC.

NOTE: MAXIMUM WIRE SIZES PER CONNECTOR ARE 3 – #14'S OR 2 – #12'S.

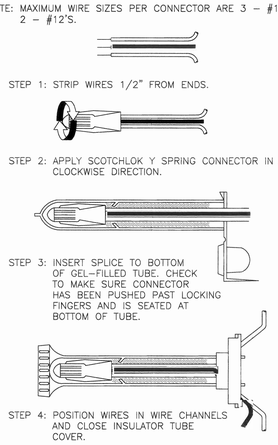

3M DBY WIRE CONNECTION DETAIL
NTS

UNPUBLISHED WORK © 1998 I.S.C. GROUP, INC.

NOTE: SET TOP OF BOX FLUSH WITH FINISH GRADE IN TURF AREAS.

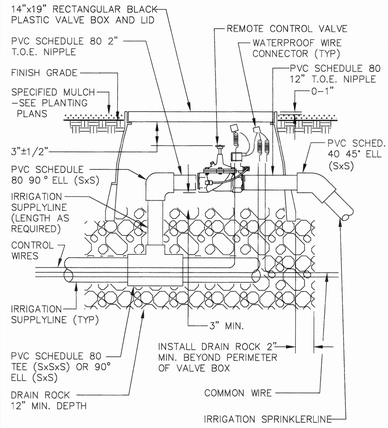

REMOTE CONTROL VALVE INSTALLATION DETAIL
NTS

UNPUBLISHED WORK © 1998 I.S.C. GROUP, INC.

NOTE: SET TOP OF BOX EVEN WITH FINISH GRADE IN TURF AREAS.

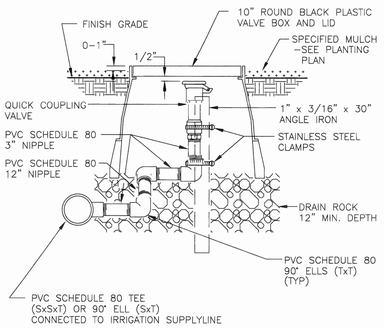

QUICK COUPLING VALVE RISER ASSEMBLY DETAIL
NTS

UNPUBLISHED WORK © 1998 I.S.C. GROUP, INC.

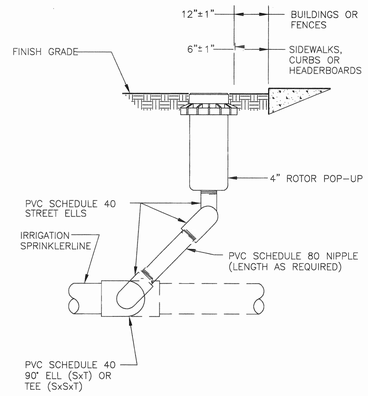

4" ROTOR POP–UP RISER ASSEMBLY DETAIL
NTS

UNPUBLISHED WORK © 1998 I.S.C. GROUP, INC.

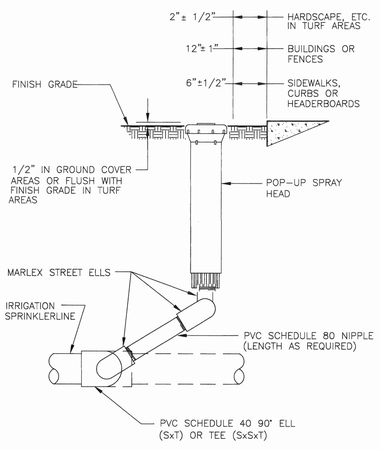

POP–UP SPRAY HEAD RISER ASSEMBLY DETAIL
NTS

UNPUBLISHED WORK © 1998 I.S.C. GROUP, INC.

NOTE: CUT SLOT IN DRAIN PIPE FOR NIPPLE

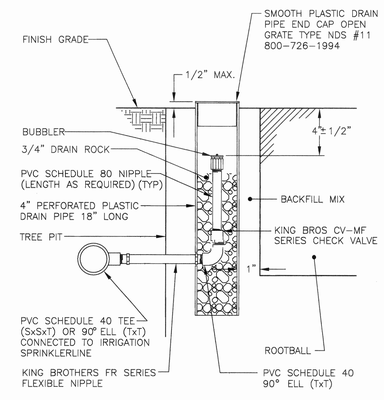

BUBBLER INSTALLATION DETAIL FOR TREES IN TURF AREAS
NTS

UNPUBLISHED WORK © 1998 I.S.C. GROUP, INC.

NOTE: INSTALL BUBBLER ABOVE ROOT BALL. INSTALL BUBBLER ON UPHILL SIDE OF PLANT WHERE APPLICABLE.

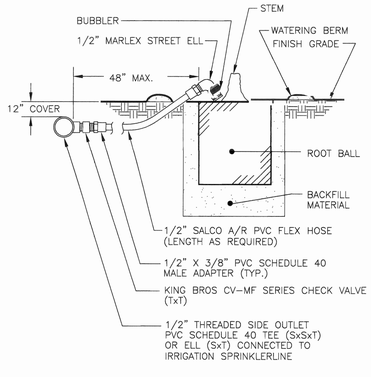

BUBBLER INSTALLATION DETAIL FOR TREES IN GROUND COVER AREAS
NTS

UNPUBLISHED WORK © 1998 I.S.C. GROUP, INC.

I.S.C. IRRIGATION SYSTEM GROUP, INC. CONSULTANTS
MEMBER • AMERICAN SOCIETY OF IRRIGATION CONSULTANTS
1799 Portola Avenue, Suite 2, Livermore, CA 94550
Phone 925/371–8230 Fax 925/371–8240
© All ideas, designs, and specifications represented are the property of I.S.C. Group, Inc. and are protected by copyright laws.
002-026-169

milpitas civic center
parking, circulation & streetscape renovation

8143, 4140, & 4194

STUDIOS architecture
919 GREEN ST. SAN FRANCISCO, CA 94111 415.398.7575

Associate Architect
Michael Willis Architects

Landscape Architect
SWA Group

Engineers
Ove Arup & Partners USA

ISSUE FOR:	DATE:
100% construction documents	6.5.01

landscape irrigation details

L3.04

PROJECT NO. 99540.00

MATCH LINE SEE SHEET L4.2

LIMIT OF WORK

EAST CALAVERAS BOULEVARD

milpitas civic center
parking, circulation & streetscape renovation

8143, 4140, & 4194

STUDIOS architecture
99 GREEN ST. SAN FRANCISCO, CA 94111 415.398.7575

Associate Architect
Michael Willis Architects

Landscape Architect
SWA Group

Engineers
Ove Arup & Partners USA

ISSUE FOR:	DATE:
100% construction documents	6.5.01

PLANTING LEGEND

STREET TREES

EVERGREEN CONIFER

GROVE TREE

(E) EXISTING TREE TO REMAIN

(R) RELOCATED TREE

SHRUBS

GROUNDCOVER

NOTE: FOR PLANTING NOTES & PLANT LIST SEE SHEET L4.2.

landscape planting plan - south area

L4.1

PROJECT NO. 99340.00

milpitas civic center
parking, circulation & streetscape renovation
8143, 4140, & 4194

STUDIOS architecture
99 GREEN ST. SAN FRANCISCO, CA 94111 415.398.7575

Associate Architect
Michael Willis Architects

Landscape Architect
SWA Group

Engineers
Ove Arup & Partners USA

ISSUE FOR:	DATE:
100% construction documents	6.5.01

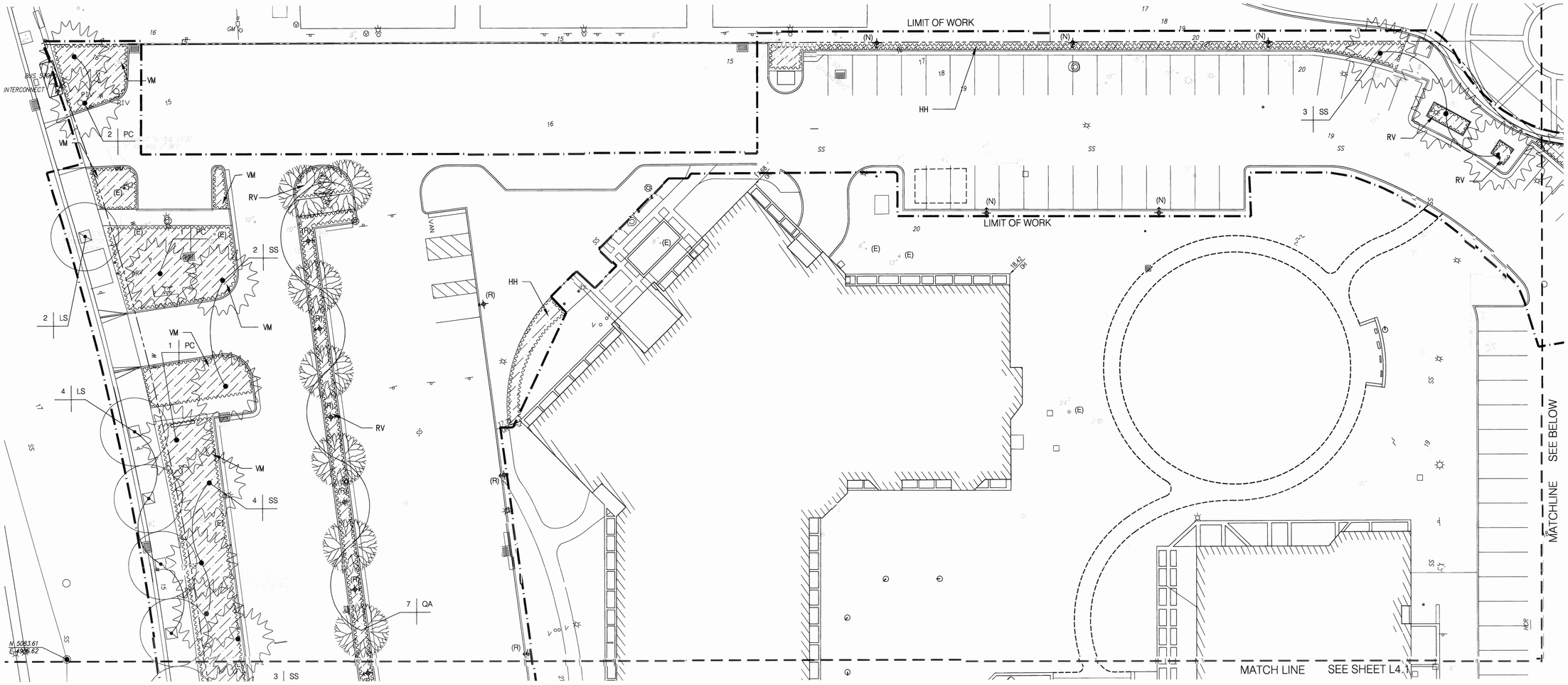

PLANTING LEGEND

- STREET TREES
- EVERGREEN CONIFER
- GROVE TREE
- (E) EXISTING TREE TO REMAIN
- (R) RELOCATED TREE
- SHRUBS
- GROUNDCOVER

Plant List

Symbol	Botanical Name	Common Name	Size	Comments
Trees				
LS	Liquidambar styraciflua	Sweet Gum	48" box	
PC	Pinus canariensis	Canary Island Pine	36" box	
SS	Sequoia sempervirens	Coast Redwood	36" box	
Shrubs and Groundcover				
RV	Ribes viburnifolium	Evergreen Currant	1 gal.	24" o.c., triangle spacing
HH	Hedera helix 'Needlepoint'	English Ivy	1 gal.	24" o.c., triangle spacing
RI	Rhaphiolepis indica	India Hawthorn	5 gal.	36" o.c., triangle spacing
VM	Vinca major	Periwinkle	1 gal.	18" o.c., triangle spacing

PLANTING NOTES

1. PROVIDE MATCHING SIZES AND FORMS FOR ALL HEDGE PLANTING. SPACE EQUALLY TRIANGULARY AS SHOWN.
2. INSTALL ALL TREES A MINIMUM OF FOUR (4) FEET FROM BACK OF CURB, EDGE OF WALL OR PAVING.
3. FORM 30 INCH WATERING AROUND ALL TREES NOT INSTALLED IN LAWN OR PAVED AREAS. FILL BASIN WITH 2 INCH LAYER OF WOOD CHIPS.
4. INSTALL LAWN UNDER ALL TREES THROUGHOUT ENTIRE LAWN PLANTING AREA TO LIMIT OF SPRAY IRRIGATION UNLESS NOTED OTHERWISE. (TREES OUTSIDE OF SPRAY IRRIGATION LIMIT ARE TO BE DRIP IRRIGATED).
5. EACH LOCATION OF ALL TREES SHALL BE APPROVED BY LANDSCAPE ARCHITECT PROIR TO FINAL INSTALLATION.
6. EXACT PLACEMENT OF HEADERS WILL BE REVIEWED BY LANDSCAPE ARCHITECT PRIOR TO FINAL INSTALLATION.
7. PLANT NAMES ARE ABBREVIATED ON THE DRAWINGS. SEE PLANT LIST FOR KEY AND CLASSIFICATION.

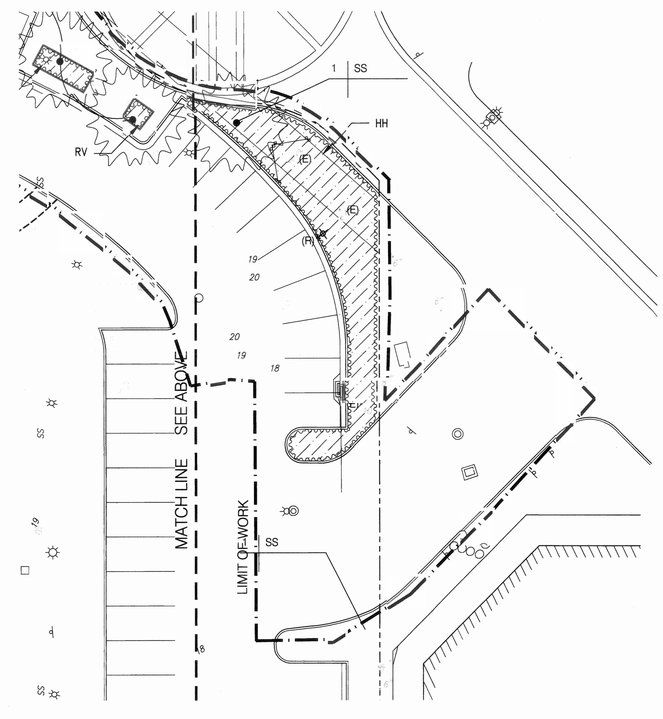

8
16
32

landscape planting plan - north area

L4.2

PROJECT NO.

milpitas city hall 95145 08 ACR

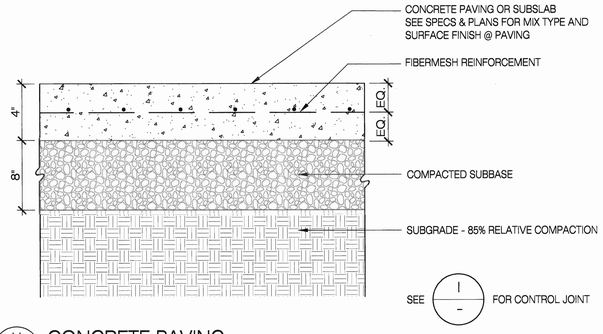

H CONCRETE PAVING
N.T.S.

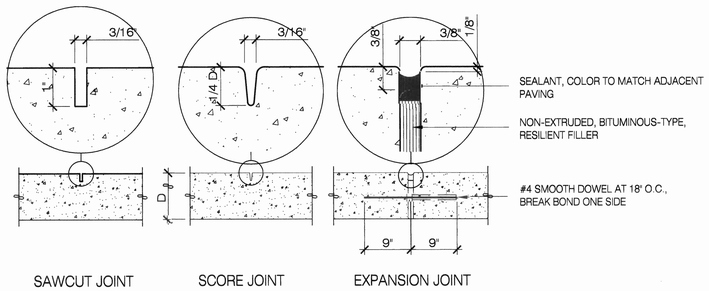

I CONCRETE CONTROL JOINTS
N.T.S.

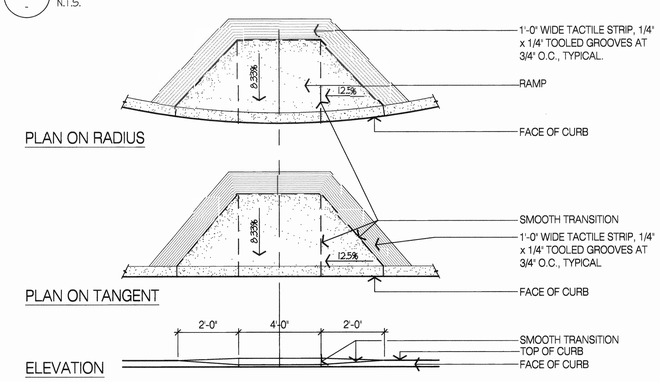

J HANDICAP RAMP
1/2" = 1'-0"

PLAN

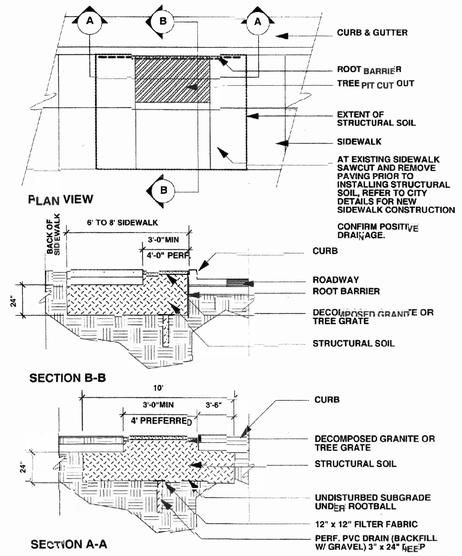

E TREEWELL
1/4" - 1'-0"

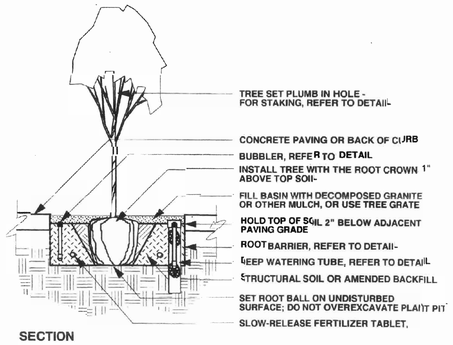

NOTES:
1. TREES SHALL NOT BE ROOT-BOUND. CAREFULLY SCARIFY ROOTBALL BEFORE PLANTING.
2. REMOVE ANY SHOOTS WITHIN 6" OF SOIL.
3. CONFIRM POSITIVE DRAINAGE OF PLANT PIT PRIOR TO PLANTING TREE. INSTALL DRAIN AS PER TREEWELL DETAIL P-4. DRAINAGE RATE OF ALL MATERIALS, INCLUDING DECOMPOSED GRANITE OR OTHER MULCH, SHOULD BE NO LESS THAN 1/4" PER HOUR AND NOT EXCEED 2" PER HOUR.

F TREE PLANTING IN SIDE WALK
3/8" = 1'-0"

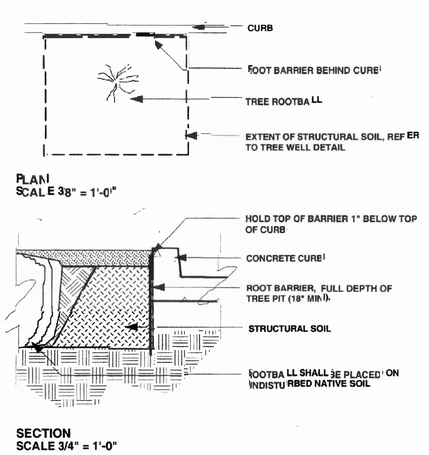

NOTES:
1. ROOT BARRIER IS REQUIRED WHEN THE CENTERLINE OF THE TREE IS WITHIN SIX FEET OF CURB.

G ROOT BARRIER
as shown

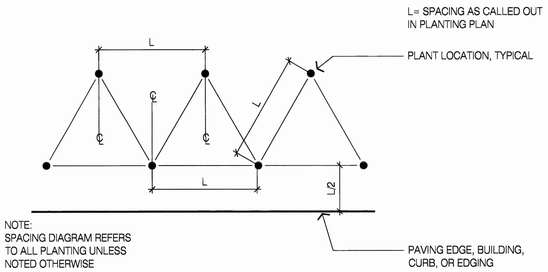

A TRIANGULAR SPACING
NTS

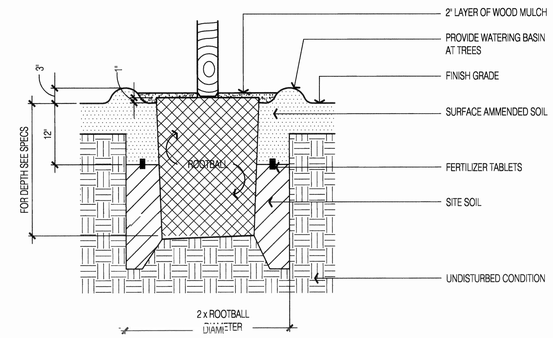

B PLANTING PIT
N.T.S.

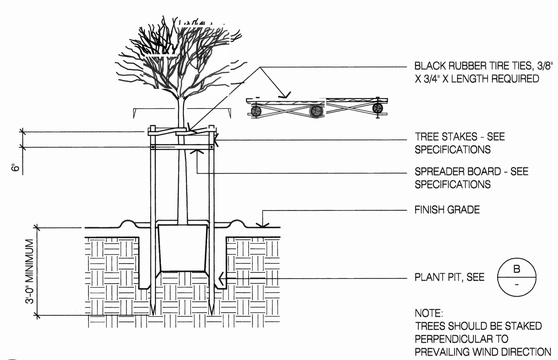

C TREE STAKING
1/2" = 1'-0"

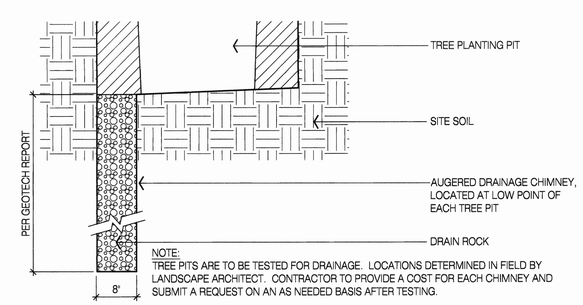

NOTE:
TREE PITS ARE TO BE TESTED FOR DRAINAGE. LOCATIONS DETERMINED IN FIELD BY LANDSCAPE ARCHITECT. CONTRACTOR TO PROVIDE A COST FOR EACH CHIMNEY AND SUBMIT A REQUEST ON AN AS NEEDED BASIS AFTER TESTING.

D DRAINAGE CHIMNEY AT TREE PLANTING PIT
N.T.S.

milpitas civic center
parking, circulation & streetscape renovation
8143, 4140, & 4194

STUDIOS architecture
99 GREEN ST. SAN FRANCISCO, CA 94111 415.398.7575

Associate Architect
Michael Willis Architects

Landscape Architect
SWA Group

Engineers
Ove Arup & Partners USA

ISSUE FOR:	DATE:
100% construction documents	6.5.01

construction details

L5.0