ADDENDUM No. 1

CITY OF MILPITAS
MILPITAS, CALIFORNIA
ENGINEERING DIVISION

CONTRACT DOCUMENTS AND SPECIFICATIONS
FOR

Creighton Park Renovation

PROJECT NO. 5109

Date: May 8, 2019

To: Plan Holders - Prospective Bidders of the subject project

From: Michael Silveira, Associate Civil Engineer

Attached is Addendum #1 for the subject project. This addendum forms a part of the Contract Documents and modifies the Bid Documents as noted below. Acknowledgement of receipt of this addendum in the space provided in the Proposal is required. Failure to acknowledge an addendum may subject the bidder to disqualification.

At 2:00 p.m. on May 21, 2019, all bidders will submit their bids as set forth in bid documents and as amended by the following:

ADDENDUM No. 1

1. For information, enclosed are sign-in sheets for and agenda issued at pre-bid meeting on May 2, 2019 and May 8, 2019.

2. On sheet L-3.0 callout SF-03, the Model # "88-60PL" with S-1 direct bury shall be replace with "#88-60PL-AR with S-1 direct bury". The bench shall be installed per detail 5 on sheet L-5.3 and the three steel bars shall be install as shown on the enclosed drawing "88 SER PL-3AR."

3. As shown on sheets L6.3 to L6.5s, the irrigation water meter and service shall be installed per City of Milpitas Standard Drawing No. 726 and the irrigation reduced pressure principle back preventer shall be in installed per City of Milpitas Standard Drawing No. 734.

4. Refer to Specification:
   Specification Section 133116 – Shade Structures, add the following to Part 1-General, item 1.02.A:

   7. The Contractor shall comply with all of the City of Milpitas Building Department, but not limited to, the special inspection and testing agreement.

   For information, enclosed is special inspection and testing agreement, for reference only, that will be issued as part of the Building permit for the Shade Structure.

END OF ADDENDUM No. 1

This addendum shall be signed by each bidder and kept for their files. Acknowledgement of receipt of this addendum in the space provided in the Proposal is required. Failure to acknowledge an addendum may subject the bidder to disqualification.

I,

_____

representing

_____

have carefully read this addendum, understand it, acknowledge receipt of this addendum and will comply its terms.

This addendum is issued by Michael Silveira, Associate Civil Engineer for the City of Milpitas, on July 14, 2017.

Creighton Park Renovation
Projects 5109
Pre-bid Meeting
Tuesday May 8, 2019 10:00 am

Name	Company	Contractors Lic. #	Phone	email
1) Billy Mullins	Lewis & Tibbitts		510-377-0087	bmullins@digLT.com
2) Gary Collier	GoodLand		209-517-263	robert@goodlandca.com
3) Armando Gonzalez	Guerra Construction		408-279-2027	jaime@guerraco.com
4) Edwin Martinez	Suarez & Muñoz Construction		510-782-6065	Edwin@suarezmunoz.com
5) Alex Giamonna	Integra Const		925 598 5032	alex@integra-csi.com
6) Gutierrez Jaime	Marina Landscape		(415) 939-6600	gjaime@marinaco.com
7)				
8)				
9)				
10)				
11)				
12)				
13)				
14)				

Creighton Park Renovation
Projects 5109
Pre-bid Meeting
Tuesday May 2, 2019 2:00 pm

Name	Company	Contractors Lic. #	Phone	email
1) PREET VIRDI	TERRAMARK G. ENGINEERING	A	408-220 9916	BID@TERRAMARK-CONTRACTORS.COM
2) Alejandro Peñor	McGuire and Hester	A	(510) 632-7676	estimating@mcguireandhester.com
3) CESAR TOMAS	AGBAYANI CONST. CO. INC.	650472	415-254-8253	CESAR.TOMAS@AGBAYANI.COM ~~CESAR~~ CESAR.TOMAS@AGBA
4) Eduardo Z G	Miracle Play		(510) 570-6330	eduardo@miracle playgroup.c
5) Semhar Teklehaimanot	Agbayani Const Co	650472	4087183482	Semhar.Teklehaimanot@agbayan
6) JEAN TYAN	Miracle Playsystems	6509956255		jean@miracle playgroup.com
7) LIONEL LOPEZ	PLAYGROUNDS UNLIMITED		408.639.4563	lionel@playgrounds unlimited.net
8)				
9)				
10)				
11)				
12)				
13)				
14)				

Creighton Park Renovation, CIP 5109

May 2nd, 2019 at 2 pm
May 8th, 2019 at 10 am

1. INTRODUCTIONS

Please see the sign-in sheet.

2. PROJECT OVERVIEW/SUMMARY OF WORK

- Summary of Work: Creighton Park is approximately 5 acres with picnic areas, walking path, approximate 3 acres of lawn area, trees and playground equipment. The park was originally constructed in 1968 with subsequent renovations completed in 1981 and 1991. The work will include new picnic areas; play equipment and surface; vehicle and pedestrian pathway; Americans with Disabilities (ADA) accessibility improvements; DG pathway, security lighting; electrical, restroom structure; dog play area; utility improvements; park furnishings; and enhancements to entry points, landscaping and irrigation, and drainage. Additive Alternatives Bid Items includes installation of seat walls, mulching areas, shade structures and fitness stations.
- Bid consists of 26 base bid items & 4 additive alternate bid items.
- City will award the contract based on the lowest responsible and responsive bid of Base Bid plus Alternative Bids.
- First Order of Work: Contractor shall submit plan, specs and calculations accordingly to the Contract Documents for Deferred Submittal Item for the Shade Structure-Cantillever Kite Structure (if awarded), Pre-Fabricate Restroom Building, and Playground including fitness stations (if award) equipment and structures within 30 days of Notice of Award.
- City has received Building approval for the footing/foundation and utility connection to the Prefabricated Restroom Building and all Electrical work. The Permit and Field Copy plans will be after the City Council has award the project. The Contractor shall comply with all Building inspection related to this work.
- Shade Structure-Cantillever Kite Structure, if the alternative bid is awarded, will be a deferred submittal. The Contractor will be responsible for submitting plans, specifications, and calculations to and obtaining a permit the City of Milpitas Building Department. The Contractor shall comply with all permit and inspection requirements. As part of the permit, the Contractor shall comply with special inspection and testing agreement. An example of the agreement will be posted as addendum prior to the bid Opening. City to pay the fees for Building Permit (sheet L5.6).
- Prefabricated Restroom Structure by Restroom Company as shown on the plans for reference is pre-approved by the City. Prefabricated restroom structure must be approved by California Department of Housing and Community Development (CDHCD) and have State of California insignia on structure when delivered to the site.
    - The Contractor may submit approve equal for prefabricated restroom structure, but it shall meet all the requirements set forth in the Contract documents. If the approved equal is accepted by the City, the Contractor shall obtain a building permit for footing/foundation and paid any fees for the permit.
    - Note a restroom structure that is not approved by CDHCD requires building permits from the City of Milpitas and County of Santa Clara. If the City accept approval equal, the Contractor will have to obtain permits and paid all fees for the permit.
- Playground and fitness Station (if awarded) Equipment, Structures, and Surfaces shall be certified by International Play Equipment Manufacturers Association (IPEMA) Certification Service. Contractor shall hire the Certifies Playground Safety Inspector and shall submitted certification prior to the complete of close out process.

- PG&E to upgrade service from 100/120V to 120/240V. Contractor to install conduit and to service pedestal per PG&E rules and regulations and coordinate service connection with PG&E. PG&E is currently working on the design.
- The Contractor will be responsible for the park site including mowing and irrigating the lawn areas.
- Plan Holders List, Plans and Specifications (one volume each) can be purchased from Prints Charles Reprographics, 1643 S Main St, Milpitas CA 95035, phone (408) 240-3330 www.printscharlesrepro.com or incoming@printscharlesrepro.com

3. **Bid Date: May 21, 2019 at 2:00 PM**
   - Bidders wishing to submit bids prior to 12:00 p.m. on May 21, 2019 must contact Michael Silveira at (408) 586-3303 to arrange drop off.
   - Bidders must attend one MANDATORY Pre-Bid Conference. Questions asked by Bidders at the Pre-Bid Conference not specifically addressed within the Contract Documents shall be answered in writing, and issued as an Addendum. Bids will not be accepted from any bidder who did not attend one of the mandatory Pre-Bid Conferences.
   - Written requests for information from prospective bidder's shall be submitted to the Michael Silveira no later than **5 PM on May 10th, 2019.**

4. **WORK HOURS**
   - Regular work hours: 7:00 am to 4:00 pm, Monday through Friday, except holidays.
   - Contractors may be allowed to work from 7:00 a.m. to 7:00 p.m. Mondays through Fridays including weekends, except for holidays, if approved by the Engineer in writing. Any work necessary to be performed after regular working hours, or on Saturdays and Sundays or other holidays, shall be performed without additional expense to the City.
   - City will provide inspection during regulars working hours from 7:30 a.m. to 3:30 p.m. Monday through Friday.
   - Refer to the most current version of the City of Milpitas Noise Abatement Ordinance, Ord. 196.6 of the Municipal Code Section V-213. It shall be unlawful for any person to engage or permit to engage in construction of any building or related road or walkway, pool, or landscape improvement or in the construction operations related thereto including to operate, permit, use, or cause to operate any of the following at the Project site, other than between the hours of 7:00 a.m. to 7:00 p.m., Monday through Sunday, unless otherwise approved by the City.

5. **SUBCONTRACTING**
   - General shall perform at least 25% of work.
   - Contractor shall submit a subcontractor list with bid.

6. **INSURANCE REQUIREMENTS: See section 00 72 13, article 36 and 37**
   - General Liability Insurance: $2.0 MILLION
   - Auto Liability Insurance: $1.0 MILLION
   - Workers Compensation Insurance

7. **Time of Contract**
   - Time of Contract: 250 Calendar Days includes adverse weather days, maintenance period, procurement and installation of all equipment, structure and material
   - Liquidated Damages: $3,000
   - Maintenance Period shall start when the planting is installed and accepted by the City. It shall continue for 60 calendar days or until the City Council accepts the project.

8. **COMMUNICATION:** The following address should be used:
   - City of Milpitas,
   - Engineering Division
   - 455 East Calaveras Blvd.
   - Milpitas, CA 95035
   - Attn: Michael Silveira
   - (408) 586-3305
   - msilveira@ci.milpitas.ca.gov

9. **QUESTIONS**
   Refer questions to Project Manager in writing by email. Deadline for RFIs is May 10th, 2019

CITY OF MILPITAS
Building & Safety Department
455 E. Calaveras Blvd.
Milpitas, CA 95035
408-586-3240
www.ci.milpitas.ca.gov

SPECIAL INSPECTION AND TESTING AGREEMENT AND SCHEDULE

CREIGHTON PARK: Site Improvement for park renovation, inclu	B-SI19-0004	3/26/2019
Project Name	Building Permit No.	Date
1173 OLYMPIC DR		
Project Address	Testing Inspection or Special Inspection Agency	

Note: Please visit http://www.ci.milpitas.ca.gov/_pdfs/bld_permit_special_inspector_list.pdf for List of recognized special Inspectors List.

Special Inspection & Testing Agreement

To permit applicants of projects requiring Special Inspection and/or Testing per Milpitas Municipal Code Section II-1-22.01:

BEFORE A PERMIT CAN BE ISSUED, the Owner, General Contractor, Project Architect/Engineer and Special Inspector shall acknowledge the required special inspections, testing and conditions by signing this Special Inspection and Testing Agreement and Schedule form (total of 4 pages).

Contractor responsible for the construction shall submit a written statement of responsibility to the Building Official and the Owner per Section 1706.1 prior to the commencement of work (see attached).

When determined by the Building & Safety Department, a pre-construction conference with the parties involved will be held to review the special inspection requirements and procedures.

Special inspection and testing shall meet the minimum requirements of Milpitas Municipal Code Section II-1-22.01 and CBC Section 1704 and 1707. The following conditions are also applicable:

1. Contractor is responsible for notification to the Special Inspector or Agency regarding individual inspections for times listed on the Special Inspection Schedule and noted on the City approved plans. Adequate notice shall be provided so the Special Inspector has time to become familiar with the project and do a thorough job for all inspections.

2. Each Special Inspector shall submit his qualifications to the City and is subject to a personal interview for pre-qualification. Special Inspectors shall display an approved identification badge when performing the function of a special inspector and must have a valid ICC Certification for the type of work being inspected. Also attach a copy of City approved matrix list for all Special Inspectors (see enclosed).

3. Duties and Responsibilities of the Special Inspector are:

   A. Observe the work for conformance with the CITY APPROVED (stamped) design drawings and specifications and applicable workmanship provisions of the CBC. NOTE: Shop drawings may be used only as an aid to inspection.

   B. Bring non-conforming items to the immediate attention of the contractor and note in daily report (see item 4). If any such item is not resolved in a timely manner or is about to be incorporated in the work, notify the Building & Safety Department immediately by telephone (408-586-3240) or in person, and the Project Engineer or Architect.

CITY OF MILPITAS
Building & Safety Department
455 E. Calaveras Blvd.
Milpitas, CA 95035
408-586-3240
www.ci.milpitas.ca.gov

SPECIAL INSPECTION AND TESTING AGREEMENT AND SCHEDULE

Special Inspection & Testing Agreement (cont.)

C. Furnish reports of tests and inspections directly to the Building and Safety Department, Engineer and Architect of record and others as designated. These reports are to include the following:

- Describe inspections and tests made with applicable locations.
- List all non-conforming items.
- Indicate how non-conforming items were resolved or indicate unresolved items as applicable.
- Itemize changes authorized by Architect, Engineer, and Building Inspection Division if not included in non-conformance items.

D. Insure that an adequate number of pre-qualified special inspection personnel are on the job based on the intensity of activities, quality of work being performed and the various operations occurring.

E. Submit a FINAL LETTER OF COMPLETION to the Building & Safety Department stating that all items requiring special inspection and testing were accomplished, approved and reported and, to the best of his knowledge, in conformance with the approved design drawings, specifications, approved change orders and the applicable workmanship provisions of the CBC. Items not in conformance, unresolved items or any discrepancies in inspection coverage (i.e. missed inspections, periodic inspections when continuous was required, etc.) shall be specifically itemized in this report.

F. FINAL LETTER OF COMPLETION shall be signed by the Licensed Registered Engineer of the Special Inspection Agency of record.

4. Each Special Inspector shall complete and sign the Special Inspection Record at the job site for each day's inspection and provide a daily handwritten report in a format acceptable to the Building & Safety Department to remain at the job site with the contractor for review by the Building & Safety Department's Inspector. Content of these daily reports shall be per Item 3C above.

5. Work requiring special inspection and the performance of special inspection shall be monitored by the City's building inspector. City approval is required prior to placement of concrete. General Contractor shall schedule inspection by calling 408-586-2797 for each day special inspection will be conducted.

6. Special inspections are to be performed on a CONTINUOUS BASIS, meaning that the SPECIAL INSPECTOR IS ON SITE IN THE GENERAL AREA AT ALL TIMES OBSERVING THE WORK REQUIRING SPECIAL INSPECTION. Periodic inspections may be approved by the Building & Safety Department and, if approved, shall be noted on the SPECIAL INSPECTION AND TESTING SCHEDULE.

7. Only the City approved Testing Agency of record shall sample, transport and test materials.

8. Only the City approved Special Inspection Agency of record shall provide special inspectors.

9. BEFORE AN OCCUPANCY PERMIT CAN BE ISSUED: The Special Inspector or Agency shall submit a FINAL LETTER OF COMPLETION per item 3E above directly to the Building & Safety Department.

10. Copy of SPECIAL INSPECTION AND TESTING SCHEDULE, SPECIAL INSPECTION AND TESTING AGREEMENT, SPECIAL INSPECTION RECORD, and SPECIAL INSPECTION DAILY REPORT SHALL BE AT THE JOB SITE.

CITY OF MILPITAS
Building & Safety Department
455 E. Calaveras Blvd.
Milpitas, CA 95035
408-586-3240
www.ci.milpitas.ca.gov

SPECIAL INSPECTION AND TESTING AGREEMENT AND SCHEDULE

Special Inspection & Testing Schedule

REINFORCED CONCRETE, GUNITE, GROUT and MORTAR:

Concrete	Gunite	Grout	Mortar	
				Aggregate Tests
				Reinforcing Tests
				Mix Designs
				Reinforcing Placement
				Batch Plant Insp.
				Inspect Placing
				Cast Samples
				Pick-Up Samples
				Compression Tests

PRECAST / PRESTRESSED CONCRETE:

Piles	Post-tens	Pre-tens	Cladding	
				Aggregate Tests
				Reinforcing Tests/Samples
				Tendon Tests
				Mix Designs
				Reinforcing Placement
				Invert Placement
				Concrete Batching
				Concrete Placement
				Installation Inspection
				Cast Samples
				Pick-Up Samples
				Compression Tests
				Stressing Inspection

MASONRY:

_____ Tests prior to construction (Masonry Units, Wall Prisms)
_____ Tests during construction (Masonry Units, Wall Prisms)
_____ Placement Inspection of Units
_____ Placement of Grout

STRUCTURAL WOOD:

	Inspection of Glu-Lam Fab. AITC Certificate
	Inspection of Truss Joist Fab, Manuf. Certificate
	Sample & Test Components
	Sample & Test
	(List specific members below)
	Shop Material Identification

STRUCTURAL STEEL / WELDING:

	Sample & Test					
	(List specific members below)					
	Shop Material Identification					
x	Welding Inspection		x	Shop	x	Field
	Ultrasonic Inspection			Shop		Field
	High Strength Bolting Inspection					
	Type bolts		N		X		F
	Metal Deck welding Inspection					
	Reinforcing Steel Welding Inspection					

FIREPROOFING:

	Placement Inspection
	Density Tests
	Thickness Test
	Inspect Batching

INSULATING CONCRETE:

	Sample & Test
	Placement Inspection
	Unit Weights

FILL MATERIAL:

	Acceptance Tests
	Placement Inspection
	Field Density
	Inspection of Pad & Trenches by
	Soils engineer
	Compaction Report or Pad Certification
	Required prior to concrete pour.

PAVING/ASPHALT CONCRETE:

	Core/Test
	Field Inspection
	Field Report for Parking Lot
	Sub-grade compaction Report
	AB Compaction
	Rock Depth and Asphalt Thickness

CITY OF MILPITAS
Building & Safety Department
455 E. Calaveras Blvd.
Milpitas, CA 95035
408-586-3240
www.ci.milpitas.ca.gov

SPECIAL INSPECTION AND TESTING AGREEMENT AND SCHEDULE

Special Inspection & Testing Schedule (cont.)

Seismic Resisting Elements (Periodic Special Inspection is required, UON):

Structural Wood:

____ Field-gluing operations of elements of the seismic-force-resisting system (continue Inspection)
____ Nailing and Bolting
____ Anchoring and other fastening: Specify here:

Cold-formed Steel Framing:

____ Screw attachment
____ Bolting
____ Anchoring of other fastening: Specify here:

Fastening of Mechanical and Electrical Components:

____ Electrical Equipment for Emergency of Standby Power systems
____ Anchorage of other Electrical Equipment in Seismic Design Category E or F
____ Installing of piping systems intended to carry flammable, combustible or highly toxic contents
____ Installing of HVAC ductwork that will contain hazardous materials.

ADDITIONAL INSTRUCTIONS OR OTHER TESTS & INSPECTIONS:

_____
_____
_____
_____

ACKNOWLEDGMENTS:

	Signature	Company
→ PROPERTY OWNER:		
→ GENERAL CONTRACTOR:		
→ PROJECT ENGINEER/ARCHITECT:		
→ INSPECTION AGENCY:		
CHIEF BUILDING OFFICIAL:		City of Milpitas

NOTE: All signatures shall be on the same page.

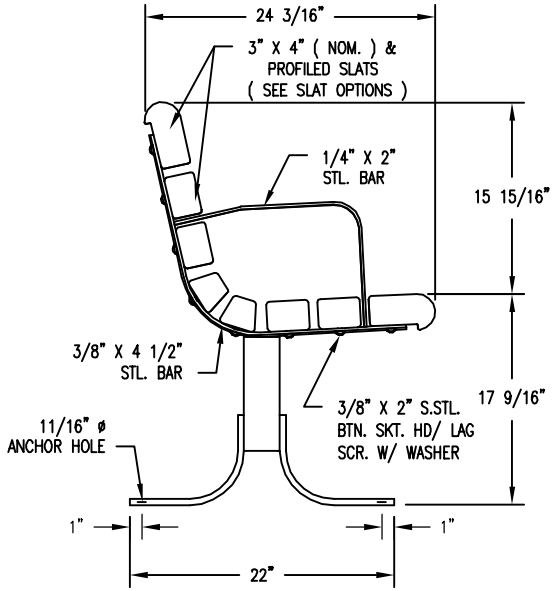

☐ S-3 GULL-WING

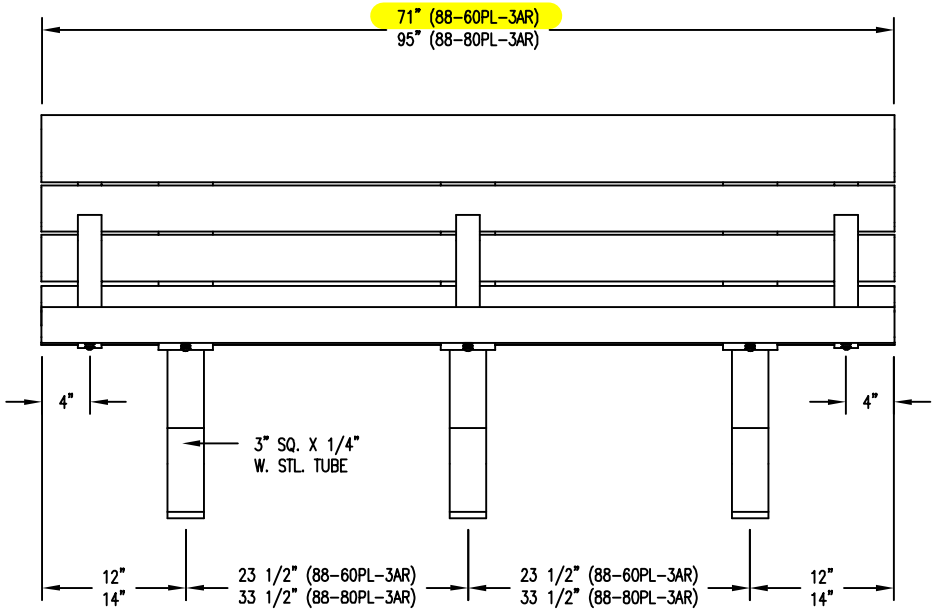

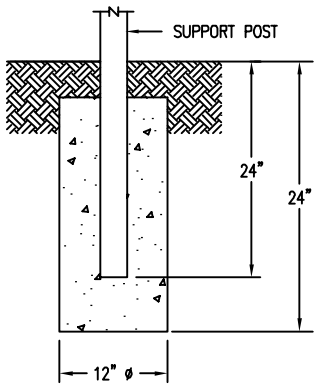

☐ S-1 EMBEDMENT

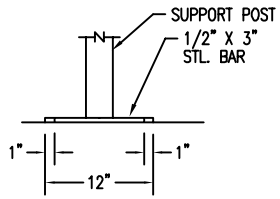

☐ S-2 SURFACE MT

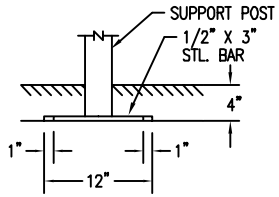

☐ S-4 SUB FLOOR

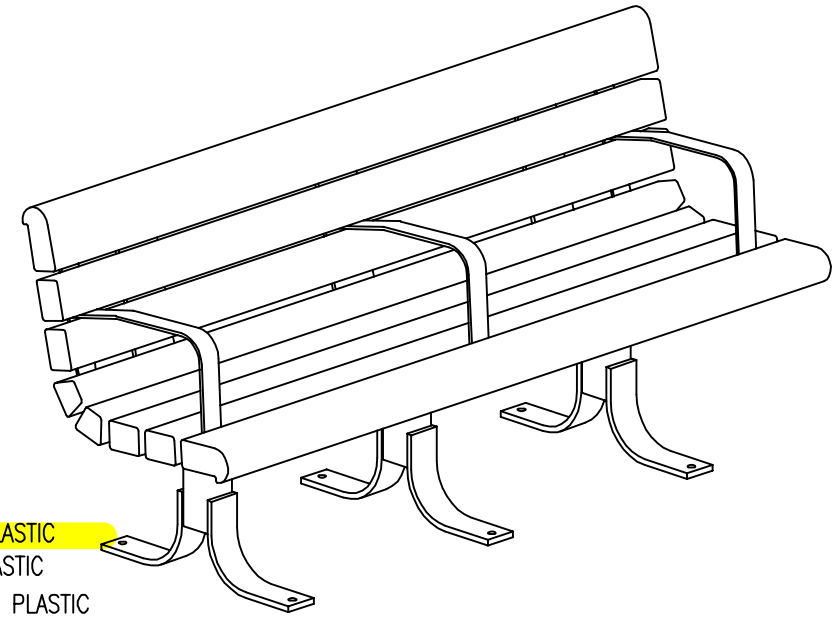

LENGTH OPTIONS

- ☐ 6' BENCH
- ☐ 8' BENCH

SLAT OPTIONS

- ☐ "CEDAR" RECYCLED PLASTIC
- ☐ "GREY" RECYCLED PLASTIC
- ☐ "REDWOOD" RECYCLED PLASTIC
- ☐ "WALNUT" RECYCLED PLASTIC
- ☐ OTHER _____

NOTES:

1.) ALL STL. MEMBERS COATED W/ ZINC RICH EPOXY THEN FINISHED W/ POLYESTER POWDER COATING.

2.) 1/2" X 3 3/4" EXPANSION ANCHOR BOLTS PROVIDED FOR OPTIONS S-2, S-3, & S-4.

DuMor, inc.	BENCH	DATE DRAWN : 03/15/01 DRAWN BY : CDC DATE REV. : 10/19/12 REV. BY : ESS	REV. D	DRAWING NUMBER 88 SER PL-3AR	SHEET 1 OF 2

NOTES:

1.) DURING ASSEMBLY PROCEDURE; DO NOT COMPLETELY TIGHTEN HARDWARE.
2.) THE ACTUAL PARTS WILL NOT BE NUMBERED. NUMBERS ONLY APPLY TO DRAWING.
3.) UPON COMPLETION OF ASSEMBLY SQUARE ALL COMPONENTS THEN TIGHTEN ALL HARDWARE.
4.) MOUNT AND ANCHOR AS SPECIFIED.

(1) ATTACH SLATS TO SUPPORTS, THEN ATTACH ARMRESTS TO SLATS.

TOOLS REQ'D

3/4" WRENCH
1/4" ALLEN WRENCH
1/2" MASONRY DRILL BIT
DRILL

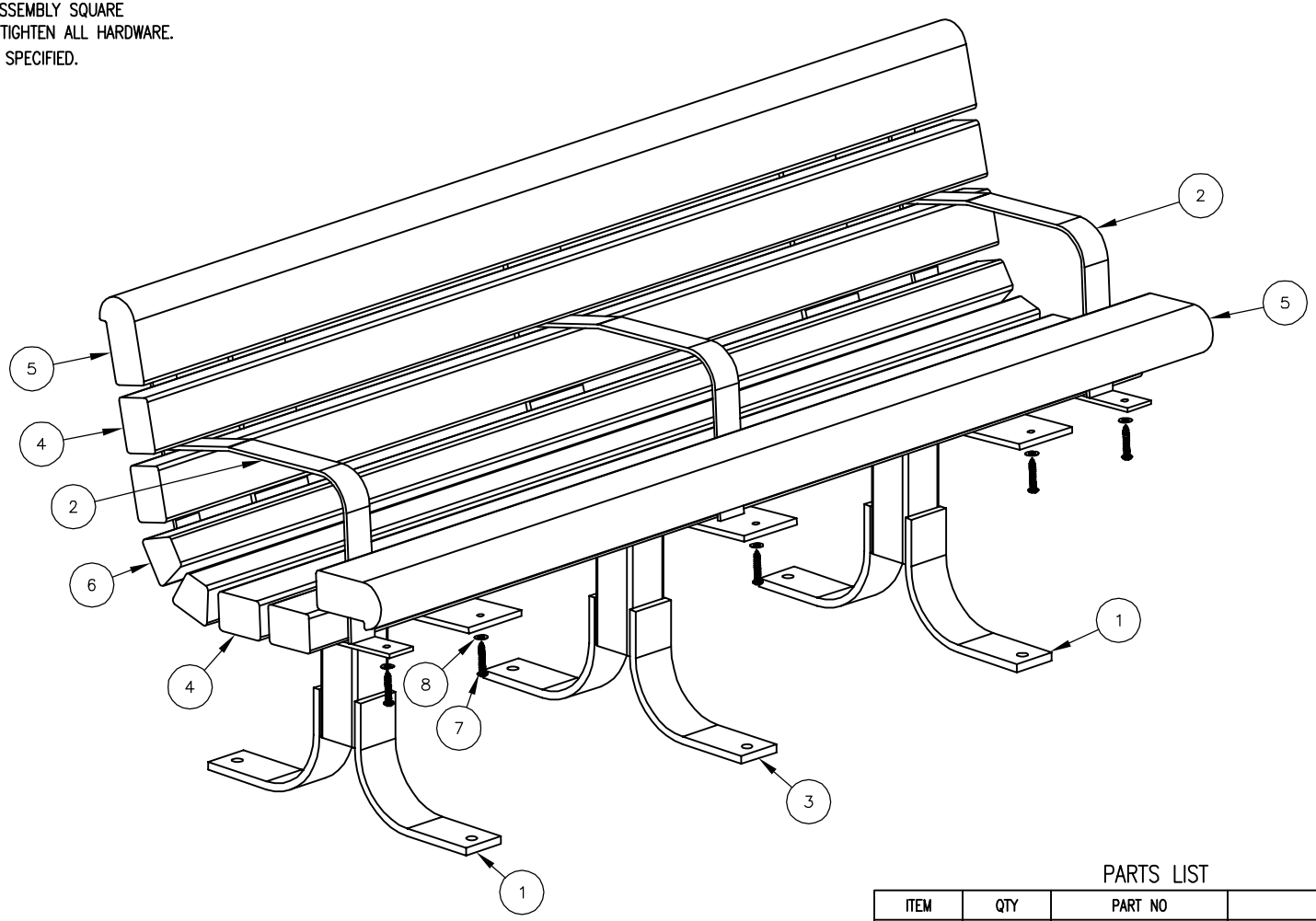

PARTS LIST

ITEM	QTY	PART NO	DESCRIPTION
1	2	0-88-00-01/S-3	BENCH SUPPORT FOR GULLWING
2	2	0-88-00-05	CONTOUR STRAP W/ ARMREST
3	1	0-88-00AR-01/S3	GULL WING SUPPORT W/ARM
4	4	0-88-60PL-22	3" X 4" X 71" INT'R SLAT, 2 ARMS, PLASTIC
5	2	0-88-60PL-23	71" EDGE SLAT, 2 ARMS, PLASTIC
6	2	0-88-60PL-24	71" TRAP SLAT, 2 ARMS, PLASTIC
7	40	1-13-016	3/8" X 2" SS BTN SKT HD LAG SCR
8	40	1-22-024	3/8" SS FLAT WASHER

KITS PROVIDED

ITEM	QTY	PART NO	DESCRIPTION
9	2	K-ANC0860-3	1/2" X 3 3/4" SS ANCHOR KIT (3PCS)
10	1	K-BL0632-40	3/8" LAG HARDWARE KIT (40PC)

DuMor, inc.

ASSEMBLY INSTRUCTIONS

DATE DRAWN : 07/14/09
DRAWN BY : ESS
DATE REV. : 10/19/12
REV. BY : ESS

REV. D

DRAWING NUMBER 88 SER PL-3AR